HOOD LOCK NOTE:—Hood is one-piece, side-hinge type with instrument panel lock knobs and may be lifted from either side after lock released on that side. To raise hood, press down and back on control knob on side on which hood is to be raised, raise hood about 1", press in on safety rod (under lower edge of hood approximately 2' forward of rear of engine) to release safety catch, lift hood up and engage support prop in opening on underside of hood (prop pivoted on dash).

SERIAL NUMBER:—Stamped on plate on left side of dash under engine hood. First number 1401-2001.

ENGINE NUMBER:—Stamped on upper left side of engine block between #3 and #4 cylinders. First number D-400051.

COMPRESSION:—Ratio—6.85-1 Std. cast iron head.
Pressure—118 lbs. at cranking speed.

VACUUM READING:—Steady 18-20" idling at 6 MPH.

IGNITION:—Coil Model CE-4659. On left hand side of engine near distributor. Service Coil CE-3224VS.
Ignition Current—2.4 amperes idling, 5 stopped.
Ignition Switch:—Mitchellock Model 24-B, No. 8781.
Ignition Lock—Briggs & Stratton. B & S No. 50184.
Key Series—P1250 to P1500. **Groove**—No. 2.
Distributor Auto-Lite IGP-4502. Single breaker, 8 lobe cam, full automatic advance type with vacuum spark control and Fuel Compensator Adjustment.
Breaker Gap—Set at .015".
Cam Angle or Dwell—27° clsd., 18° open (.017" gap).
Breaker Arm Spring Tension—17-20 ounces.
Rotation—Counter-clockwise viewed from above.
Condenser—No. IG-2671K. Capacity .20-.25 mfd.

Automatic Advance

Distributor Degrees	R.P.M.	Engine Degrees	R.P.M.
Start	250	0	500
3	525	6	1050
6	800	12	1600
9	1210	18	2420
11.5	1550	23	3100

Vacuum Spark Control—Separate unit mounted on hold-down plate and linked to adjusting quadrant on distributor. Provides additional advance at speeds above idling except when engine accelerated or operated with wide open throttle when spark retarded by return spring within unit.

Vacuum Advance

Distr. Degrees	Eng. Degrees	Vacuum (" of HG)
Start	0°	10"
1°	2°	11⅛"
3°	6°	13½"
5°	10°	15⅞"
6°	12°	17"

Fuel Compensator Adjustment—Permits 40° range of adjustment by loosening vacuum unit link screw at distributor quadrant. See Ignition Timing below.
Removal:—Distributor mounted on left side of crankcase. To remove, disconnect vacuum line, take out screw in hold-down plate, lift entire unit out.

FIRING ORDER:—1-6-2-5-8-3-7-4. See diagram.

SPARK PLUGS:—AC No. 104 or Champion Y4A. 10 MM. Metric type. NOTE—Do not use more than 50 in. lb. (10 lb. pull on 5" wrench) when tightening plugs.
Spark Plug Gaps—.028" (.0255-.0305").

IGNITION TIMING:—Standard setting listed below (see Fuel Compensator Setting following):

	Flywheel Degrees	Piston Position
All Engines	5° BTDC	.0103" BTDC

Timing Mark Note—Marks on vibration dampener at front of engine. Dampener marked '#1 UP.DC' with fifteen 1° graduations before this point.

Timing—With #1 piston on compression, turn engine over until piston reaches firing position with correct mark on dampener in line with pointer on chain case cover (see table above). Loosen vacuum unit link screw in distributor quadrant, rotate distributor until contacts begin to open, tighten screw. Check Fuel Compensator Setting (below).

Timing (Neon Timing Light)—Mark correct graduation on vibration dampener, clip neon timing light to #1 spark plug and direct light on vibration dampener, idle engine and adjust distributor as directed above.

Fuel Compensator Setting—Should be set for slight ping when accelerating engine with wide open throttle. To adjust, loosen vacuum unit link screw in distributor quadrant, rotate one graduation at a time counter-clockwise (if ping too severe), clockwise (if no ping), until correct performance secured.

CARBURETION:—Carburetor—Carter Type WDO, Model 512-S. 1" dual, downdraft type with Climatic Control. No. 371 cast on face of flange.
For complete data, refer to 1941 Carburetor Index.
Idle Adjustment—With engine warm and running at slow idle speed (choke valve wide open, fast idle inoperative), set throttle stopscrew for 6 MPH. idle speed. Adjust idle adjusting screw for each barrel (in succession) until engine fires smoothly (½-1½ turns open for each screw—turn screws in for leaner mixture). Readjust idle speed.
Accelerating Pump—Pump arm under dust cover at top of carburetor has two holes for pump link engagement. Set as follows:
Inner (min. stroke)—Hot weather or hi-test fuel.
Outer (max. stroke)—Cold weather or low-test fuel.

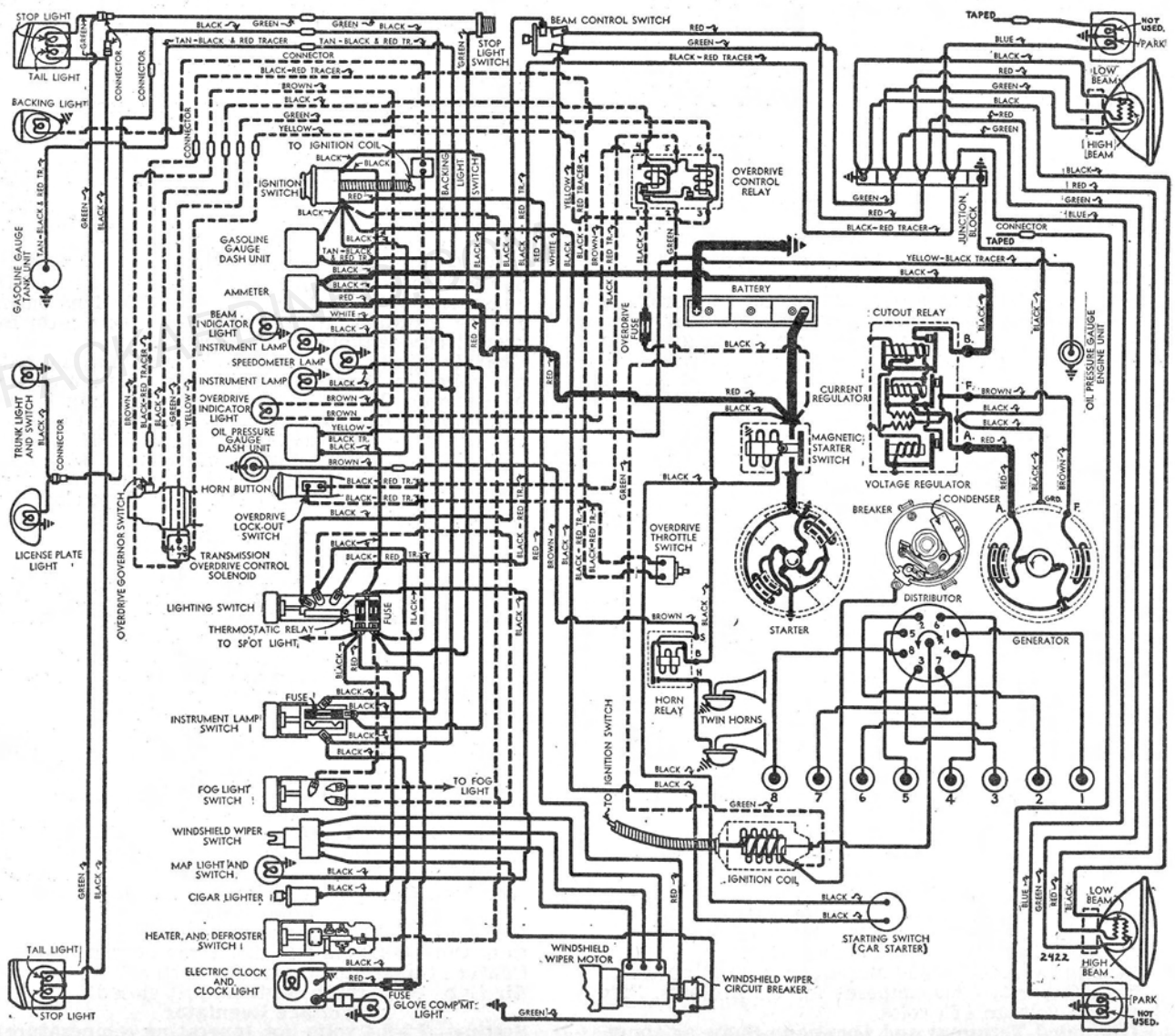

Float Level—5/32" from top of float to bowl cover with valve seated (remove gasket & invert to check).
Metering Rods & Jets—*See Carter Jet Table in Carburetor Section for complete data.*

Fast Idle:—Integral type (built-in carburetor).
For complete data, refer to 1941 Carb. Equip. Index.
Setting—Adjust fast idle screw for .030" throttle opening with choke valve closed.

Automatic Choke:—Carter Climatic Control.
For complete data, refer to 1941 Carb. Equip. Index.
Setting—Set thermostat coil housing at Index mark.

Throttle Guard (Cars with Aero-Drive):—Vacuum operated throttle kicker to prevent engine stalling when free-wheeling. Kicks in at 4 MPH., kicks out at 9 MPH.
For complete data, refer to 1941 Carb. Equip. Index.
Setting—Set gap between plunger and carburetor throttle lever at .020" (carburetor set for 6 MPH. slow idle speed), set spring tension adjusting screw 3/16" out beyond face of locknut.

Air Cleaner:—AC #1542094 oil-wetted type standard. Heavy duty oil-bath type optional.

Fuel Pump:—AC Type AH. Inverted, diaphragm type. Pump Replacement Exchange Part No. 525.
For complete data, refer to 1941 Carb. Equip. Index.

Gasoline Gauge:—Stewart (Stewart-Warner) Electric.
For complete data, refer to 1941 Carb. Equip. Index.

MANIFOLD HEAT CONTROL:—Thermostatic coil type. Make certain that valve operates freely (valve must not bind or stick). Do not oil control.

VALVE TIMING:—To Check—With tappet clearance of .0125", #1 intake valve opens with piston 1° or .0004" BTDC when 1st graduation before top dead center mark '#1 UP.DC' on vibration dampener lines up with pointer (permissible variation 4° either way). Reset tappet clearance at .007" hot.

Tappet Clearance:—.007" Int., .010" Exh. Warm. Adjusting screws are self-locking (no locknuts).

Valve Spring Pressure:—47-52 lbs. at 1⅝" (valve closed), 114-124 lbs. at 1 5/16" (valve open).

LUBRICATION:—Crankcase Capacity—6 quarts.
Normal Oil Pressure—40 lbs. at 45 MPH.

COOLING SYSTEM:—Capacity—17 quarts.
Pressure Valve:—In filler cap. Opens at 4½ lbs. (Std.), 12 lbs. (with Air Conditioning Equipment).

Thermostat:—Harrison. In cylinder head outlet.
Setting—Starts to open 147½°.

TRANSMISSION (ECONO-DRIVE) CONTROL:—Electric type with solenoid operated kick-down through accelerator switch and Governor Switch.
For complete data, refer to 1941 Mech. Equip. Index.
Overdrive Solenoid—Delco-Remy Model 1118005.
Overdrive Indicator Light—Green light on right side of speedometer dial. Lighted whenever overdrive is ready to engage (light goes out when accelerator pedal is released so that overdrive can engage).
Throttle Switch—Cole-Hersee. Packard No. 347496. Adjust tappet screw on throttle lever to just contact switch plunger with throttle valve wide open.
Governor Switch—Bendix No. 364782.
Control Relay—Delco-Remy Model 1116801.

BATTERY:—Willard Type WH-2D-120 or Auto-Lite Type P-17-2R 'End-to-end' type. 6 volt, 17 plate, 120 ampere hour capacity (20 hour rate).
Grounded Terminal—Positive (+) terminal.
Engine Ground—Strap from transmission to frame.
Location—On bracket to left of engine in engine compartment.

STARTER:—Auto-Lite MAW-4024, Armature MAW-2128.
Drive—Outboard Barrel Type Bendix No. A-1792.
Rotation—Counter-clockwise at commutator end.
Brush Spring Tension—42-53 ozs. (new brushes).
Cranking Engine—125 RPM., 175 amperes, 5.1 volts.

Performance Data

Torque		R.P.M.	Volts	Amperes
0	ft. lbs.	4900	5.5	65
0.6	"	3300	5.5	100
2.75	"	1480	5.0	200
5.45	"	820	4.5	300
8.50	"	400	4.0	400
11.55	"	110	3.5	500
11.5	"	Lock	3.0	505
18.0	"	Lock	4.0	670

Removal:—Flange mounted on left front face of flywheel housing. To remove, take out flange mounting screws, lift out starter and switch assembly.

Starting Switch:—A-L Model SS-4017. Magnetic type. Mounted on starter and controlled by Carter Car Starter No. 192-11U on carburetor (accelerator pedal starting).
For complete data, refer to 1941 Elec. Equip. Index for Auto-Lite Magnetic Starter Control and Carter Car Starter.

GENERATOR:—Auto-Lite GDZ-4801F, Armature GDZ-2006F. Two brush type with Current & Voltage control.
Charging Rate Adjustment—No adjustment at generator. Charging rate controlled by Voltage Regulator and maximum output by Current Regulator.
Maximum Charging Rate—35 amperes, 8.0 volts hot. Actual charging rate controlled by Voltage Regulator and dependent on battery condition.

Performance Data

Cold			Hot		
Amperes	Volts	R.P.M.	Amperes	Volts	R.P.M.
0	6.4	925	0	6.4	1000
4	6.6	1035	4	6.6	1120
8	6.75	1140	8	6.75	1235
12	6.95	1250	12	6.95	1350
16	7.15	1370	16	7.15	1460
20	7.3	1480	20	7.3	1590
24	7.5	1590	24	7.5	1730
28	7.7	1710	28	7.7	1900
32	7.9	1820	32	7.9	2090
*35	8.0	1900	35	8.0	2250

*—Current Regulator setting.
Rotation—Counter-clockwise at commutator end.
Field Current—1.60-1.78 amperes at 6.0 volts.
Motoring Current—4.15-4.60 amperes at 6.0 volts.
Brush Spring Tension—53 ozs. max. (new brushes).

Removal:—Pivot mounted at left side of engine at front. To remove, take out pivot and clamp bolts.

Belt Adjustment:—50 lbs. tension on spring scale hooked to generator frame, or ½" thumb-pressure deflection midway between generator and pump pulleys.

REGULATOR:—Auto-Lite VRP-4002C. Current-voltage type. In case on left side of engine dash.
For complete data, refer to 1941 Elec. Equip. Index.
NOTE—Regulator case cover sealed. Serviced on exchange basis if seals not broken (to remove cover).

Cutout Relay
Cuts In—6.4-6.6 volts, 920 generator RPM (cold).
Cuts Out—4.8-5.6 volts (approx. 4-6 amps. disch.).
Contact Gap—.015" minimum.
Air Gap—.031-.034" with contacts open (check at hinge end of core).

Voltage Regulator
Setting—7.2-7.5 volts at 70° F. See Electrical Equipment Section for settings at other temperatures.
To Check (without breaking seals)—Connect ammeter in charging line at regulator 'B' terminal (use short heavy leads), voltmeter between 'B' terminal and ground. Operate generator at speed equivalent to 30 MPH., charging fully charged battery, until voltage is steady. Voltage reading should agree with setting given above.
To Adjust (with cover removed)—Change regulator armature spring tension by bending lower spring hanger slightly. See Electrical Equipment Section.
Contact Gap—.012" min. (armature against stop pin.)
Air Gap—.048-.052" with contacts just opening.

Current Regulator
Setting—34-36 amperes (marked '35' on the cover).
To Check (without breaking seals)—Connect test meters as for voltage check (above). Operate generator at speed equivalent to 30 MPH. charging battery, turn on car lights and accessories or connect load (bank of headlamp bulbs, etc.) between ammeter and battery so that generator charges at peak rate and Current Regulator operates. Current reading should agree with setting given above. If more than slight excess noted, regulator is defective.
To Adjust (with cover removed)—Same as for Voltage Regulator (above).
Contact Gap & Air Gap—Same as Voltage Regulator.

LIGHTING:—Headlamps—Hall 'Sealed Beam' type.
For complete data, refer to 1941 Elec. Equip. Index
Headlamp Adjustment—Aim upper beam straight ahead (hot spot center 3" below lamp center height).
Beam Indicator—Red light on left side of speedometer dial. Lighted when Country (upper) beam in use.

Switches
Lighting—Delco-Remy.
Beam Selector—Delco-Remy.

Bulb Specifications

Position	Candlepower	Mazda No.
Headlamps	Sealed Beam	
Parking	21-3①	1154
Instr., Speedometer, Clock	1½	55
Map, Aero-Drive Ind.	1½	55
Glove Comp't., Beam Ind.	1	51
Stop & Tail	21-3	1154
Rear License	3	63
Dome	6	81

①—3 cp. The 21 cp. filament is not used.

THERMOSTATIC RELAY:—Delco-Remy. On lighting switch. Contacts remain closed with 30 amperes, open in 3 minutes with 42 amps. at 70° F. Not adj.

FUSES:—Stop Light, Cigar Lighter and Accessories—Two 20 ampere. On back of lighting switch.
Instrument & Tail Light—20 ampere. In connector in Lighting Switch to Panel Light Switch feed wire.
Clock—2 ampere. In feed wire near clock.
Econo-drive—30 ampere. In relay lead near starter.
Windshield Wiper—No fuse (circuit-breaker).

HORNS:—Sparton—Vibrator type, air tone, twin horns operated by relay.
Horn Current—22-25 amperes (total both horns).

Horn Relay:—R-B-M Model 6006.
Contacts Close—3-4 volts (with relay upright).

WINDSHIELD WIPER:—Stewart-Warner Series 645-E. Electric type. NOTE—'Klixon' type circuit-breaker mounted on unit (no fuse used).
For complete data, refer to 1941 Mech. Equip. Index.