No. 891,934. PATENTED JUNE 30, 1908.

R. HUFF.

TRANSMISSION GEAR FOR MOTOR VEHICLES.

APPLICATION FILED FEB. 16, 1907.

Fig. 1.

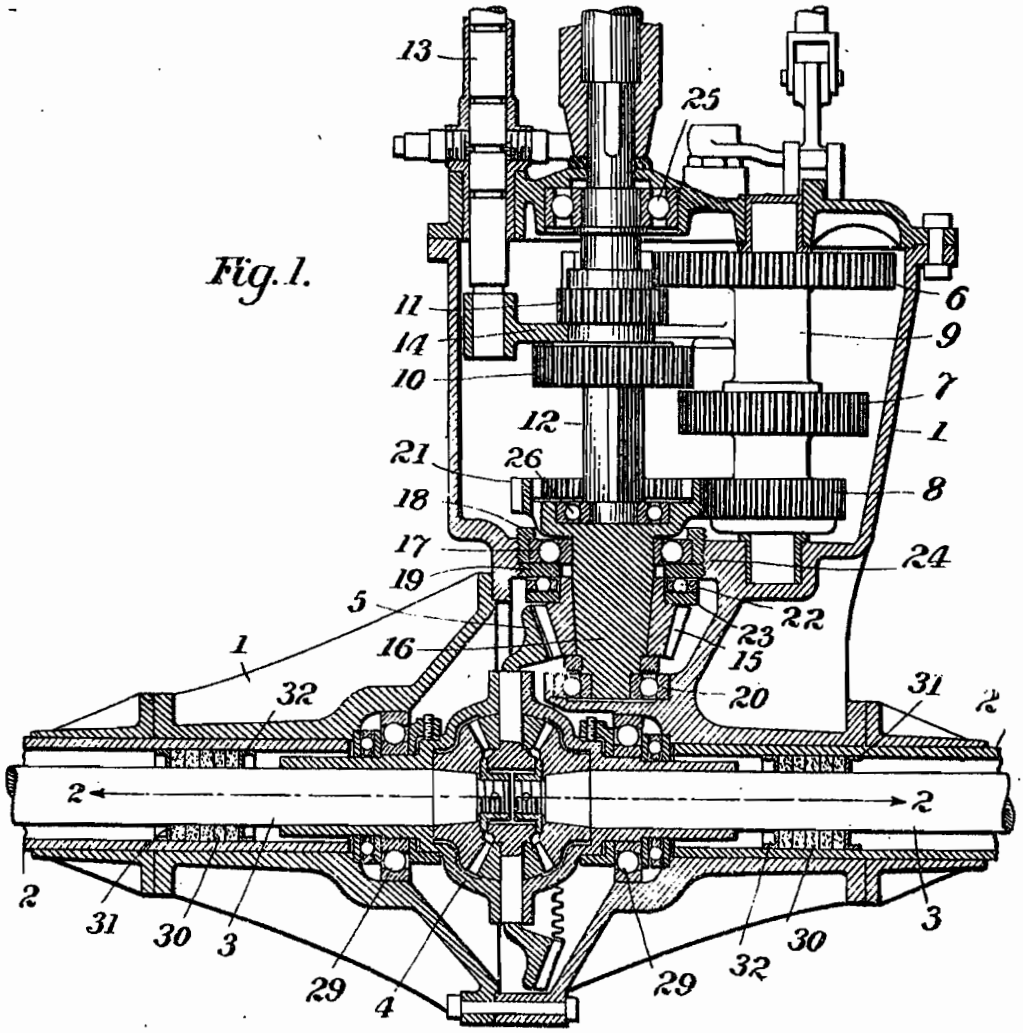

Fig. 2.

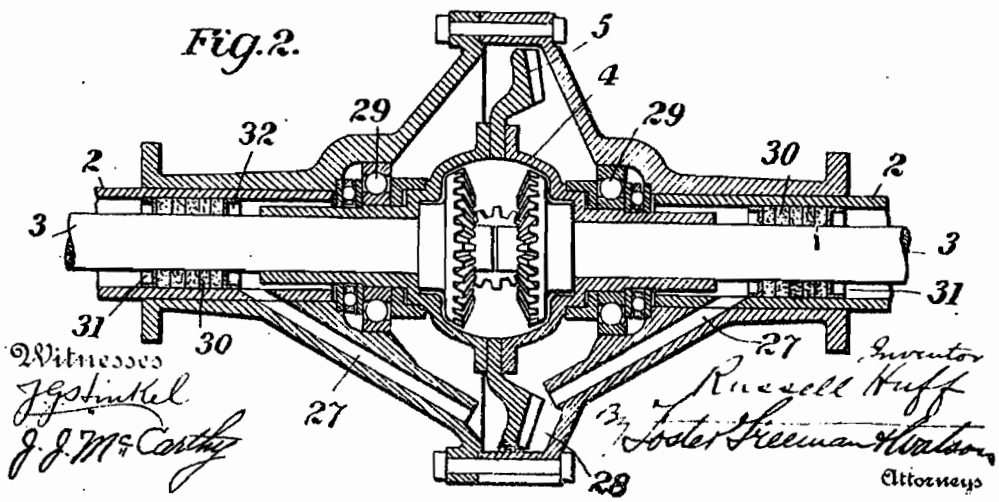

Witnesses
J. J. McCarthy

Inventor
Russell Huff
By Foster Freeman & Watson
Attorneys

UNITED STATES PATENT OFFICE.

RUSSELL HUFF, OF DETROIT, MICHIGAN, ASSIGNOR TO PACKARD MOTOR CAR COMPANY, OF DETROIT, MICHIGAN, A CORPORATION OF WEST VIRGINIA.

TRANSMISSION-GEAR FOR MOTOR-VEHICLES.

No. 891,934. Specification of Letters Patent. Patented June 30, 1908.

Application filed February 16, 1907. Serial No. 357,722.

To all whom it may concern:

Be it known that I, RUSSELL HUFF, a citizen of the United States, and resident of Detroit, Wayne county, State of Michigan, have invented certain new and useful Improvements in Transmission-Gear for Motor-Vehicles, of which the following is a specification.

The object of the present invention is to improve the construction and arrangement of transmission gearing for motor vehicles and more particularly transmission gearing arranged at and directly connected with the rear or driving axle. The invention will be described in connection with the accompanying drawing, in which,

Figure 1 is a substantially horizontal section through the rear axle and the casing of the transmission gear; Fig. 2 is a vertical section on the line 2—2 of Fig. 1.

Referring to the drawings, 1 indicates a gear case, 2 the rear axle casings which are rigidly connected with the gear case, 3 the sections of the rear axle, 4 the housing of the differential gears and 5 the gear surrounding and connected to the said housing and which drives the same. The differential gears may be of any approved construction, it being understood that they are connected to the two axle sections 3 in some suitable manner.

The change speed gearing comprises gears 6, 7, and 8, fixed on a counter-shaft 9, and gears 10 and 11 arranged to slide on and turn with a drive shaft 12, the gear 11 being adapted to coöperate with the gear 6 and the gear 10 adapted to coöperate with the gear 7. The gears 10 and 11 are preferably connected together by a common hub or sleeve and are adapted to be shifted longitudinally on the shaft 12 by a rod 13 and a yoke 14.

The gear 5 which turns the differential housing is driven by a beveled gear 15 carried by a short shaft 16 which is mounted in a ball bearing 17, the outer ring of the ball bearing being seated in a ring 18 which is adjustably threaded into the casing 1 and adapted to be held in any desired position by a threaded ring 19 which serves as a lock nut. At its rear end the shaft 16 is carried in a ball bearing 20 mounted in the casing 1 and at its front end it carries a clutch gear 21 which is provided with external teeth in mesh with the gear 8 of the counter-shaft and with internal teeth adapted to intermesh with the gear 10 of the drive shaft. When the gears 10 or 11 intermesh with one of the gears of the counter-shaft, the differential is driven by means of the gears 8 and 21. When however the gear 10 intermeshes with the gear 21, the differential is driven directly from the drive shaft 12 and the counter-shaft runs idle, the gears 10 and 21 forming a clutch for direct connection.

A thrust bearing 22 is interposed between the pinion 15 and the ring 19, the said bearing comprising a ring 23 fixed on the pinion and a series of balls between the ring 23 and the ring 19. The supporting rings 18 and 19 for the bearing 17 are preferably mounted in a flange 24 of the casing, which flange and bearing form a partition dividing the change speed gear compartment from the differential compartment of the casing. The shaft 16 extends through said partition and carries the gear 21 in one compartment and the gear 15 in the other. The drive shaft 12 has a bearing 25 in the forward end of the casing 1 and its rear or free end is journaled in a suitable ball bearing 26 in the forward end of the shaft 16 adjacent to the clutch gear 21. The threaded rings 18 and 19 permit of adjusting the shaft 16 lengthwise to some degree to adjust the mesh of the beveled gears 5 and 15 accurately.

The casing 1 is provided with passages or ducts 27 leading from the interior of the axle casings 2 to the lower part 28 of the casing. The gears in the casing run in oil which oil is carried up from the bottom 28 to the top of the casing and part of it finds its way through the bearings 29 of the differential housing into the space between the axle sections and their casings. This oil is prevented from passing outward through the said space to the wheel hubs by packing material 30 which is interposed between the axle sections and their casings and held in place by cups or rings 31, 32 which are pressed into the axle casings and have flanges engaging the axle casings frictionally. The packing material 30 is outside of the upper ends of the ducts 27 and the oil which circulates through the bearings into the axle casings returns by said ducts to the lower part of the gear case. The oil is thus circulated through the axle bearings and the bearings of the shaft 16 are likewise lubricated by oil carried up by the gear 5.

Having described my invention what I claim and desire to secure by Letters-Patent, is,

1. In transmission gearing for motor vehicles, the combination with the change speed gearing, the differential gearing and a casing inclosing said gearings, of a drive shaft, and a shaft interposed between the drive shaft and the differential gearing, a clutch gear on one end of said interposed shaft coöperating with the change speed gearing, and a beveled gear upon the opposite end thereof coöperating with the differential gearing, a radial bearing for said interposed shaft adjustably mounted in the casing, and a thrust bearing for said shaft also adjustably mounted in the casing, one of said bearings serving as a lock for the other.

2. In transmission gearing for motor vehicles, the combination of rear axle casings, an intermediate casing, differential gearing in said intermediate casing, and packing material arranged in said rear axle casings on opposite sides of the differential gearing, said casings having conduits leading from the interior of the axle casings to the lower part of the casing containing the differential gearing.

3. In transmission gearing for motor vehicles, the combination with rear axle sections, intermediate differential gearing, a housing for said differential gearing, means for turning said housing, ball bearings for said housing, and casings surrounding said differential gearing and said axle sections, of packing material arranged in said casings surrounding the axle sections, said casings having conduits leading from the space surrounding the axles to the lower part of the casing surrounding the differential gearing.

4. In transmission gearing for motor vehicles, the combination with rear axle sections and intermediate differential gearing, of a casing surrounding said axle sections and gearing, and supporting the differential gearing on bearings therein, and packing material in said casing and surrounding the axle sections, said casing having conduits leading from points contiguous to said packing to the lower part of the casing.

In testimony whereof I affix my signature in presence of two witnesses.

RUSSELL HUFF.

Witnesses:
ALLEN LOOMIS,
DANIEL HUFF.

DESIGN.

No. 39,272. PATENTED APR. 21, 1908.

S. D. WALDON.

RADIATOR CASING CAP FOR AUTOMOBILES.

APPLICATION FILED FEB. 25, 1907.

Fig. 1.

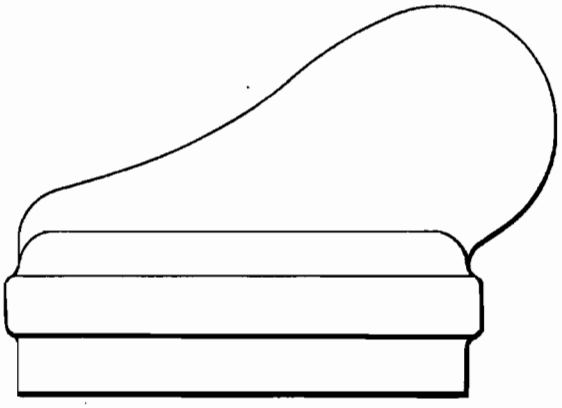

Fig. 2.

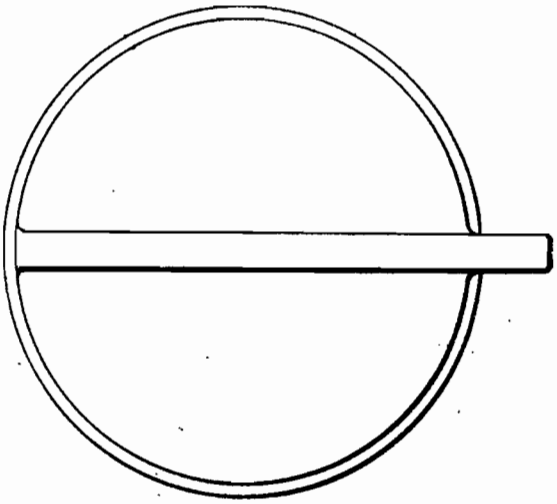

Witnesses
C. H. Taylor
J. J. McCarthy

Inventor
by Sidney D. Waldon
Foster Freeman & Watson
Attorneys

THE NORRIS PETERS CO., WASHINGTON, D. C.

UNITED STATES PATENT OFFICE.

SIDNEY D. WALDON, OF DETROIT, MICHIGAN, ASSIGNOR TO PACKARD MOTOR CAR COMPANY, OF DETROIT, MICHIGAN, A CORPORATION OF WEST VIRGINIA.

DESIGN FOR A RADIATOR-CASING CAP FOR AUTOMOBILES.

No. 39,272. **Specification for Design.** **Patented April 21, 1908.**

Application filed February 25, 1907. Serial No. 359,308. Term of patent 14 years.

To all whom it may concern:

Be it known that I, SIDNEY D. WALDON, a citizen of the United States, residing at Detroit, Wayne county, State of Michigan, have invented a new, original, and ornamental Design for a Radiator-Casing Cap for Automobiles, of which the following is a specification, reference being had to the accompanying drawing, forming part thereof, in which.

Figure 1 is a side elevation of a radiator casing cap for automobiles showing my new design, and Fig. 2 is a plan view thereof.

I claim:—

The ornamental design for a radiator casing cap for automobiles, as shown.

SIDNEY D. WALDON.

Witnesses:

MARK C. TAYLOR,

JNO. D. CURRY.

DESIGN.

No. 39,289. PATENTED APR. 28, 1908.

R. HUFF.

RADIATOR FRAME FOR MOTOR VEHICLES.

APPLICATION FILED MAR. 4, 1907.

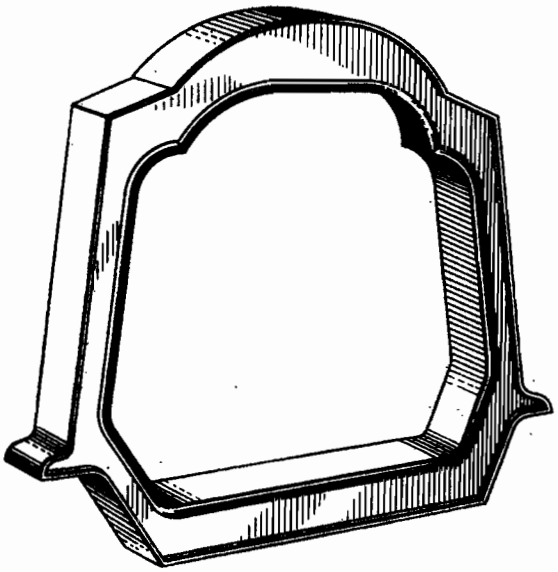

Witnesses

J. G. Hinkel

J. J. McCarthy

Inventor

Russell Huff

By Foster Freeman Watson & Coit

Attorneys

THE NORRIS PETERS CO., WASHINGTON, D. C.

UNITED STATES PATENT OFFICE.

RUSSELL HUFF, OF DETROIT, MICHIGAN, ASSIGNOR TO PACKARD MOTOR CAR COMPANY, OF DETROIT, MICHIGAN, A CORPORATION OF WEST VIRGINIA.

DESIGN FOR A RADIATOR-FRAME FOR MOTOR-VEHICLES.

No. 39,289. **Specification for Design.** **Patented April 28, 1908.**

Application filed March 4, 1907. Serial No. 360,620. Term of patent 14 years.

To all whom it may concern:

Be it known that I, RUSSELL HUFF, a citizen of the United States, residing at Detroit, in the county of Wayne and State of Michigan, have invented a new, original, and ornamental Design for Radiator-Frames for Motor-Vehicles, of which the following is a specification, reference being had to the accompanying drawing, forming part thereof.

The figure is a front view of a radiator for motor vehicles, showing my new design.

I claim:

The ornamental design for a radiator frame for motor vehicles, as shown.

RUSSELL HUFF.

Witnesses:

ALLEN LOOMIS,

MARK C. TAYLOR.

DESIGN.

No. 39,256. PATENTED APR. 7, 1908.

R. HUFF.

HUB CAP FOR MOTOR VEHICLES.

APPLICATION FILED MAR. 4, 1907.

Fig. 1.

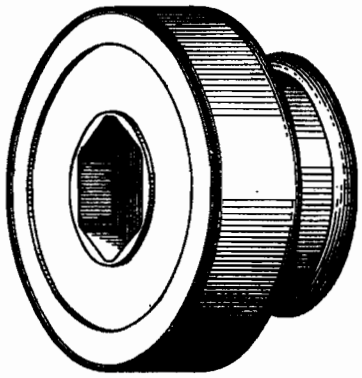

Fig. 2.

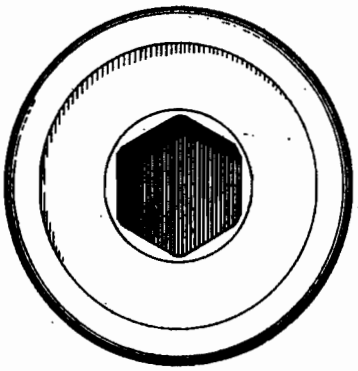

Fig. 3.

Witnesses
J. G. Stinkel
B. C. Rust

Inventor
Russell Huff
By Foster Freeman & Watson
Attorneys

THE NORRIS PETERS CO., WASHINGTON, D. C.

UNITED STATES PATENT OFFICE.

RUSSELL HUFF, OF DETROIT, MICHIGAN, ASSIGNOR TO PACKARD MOTOR CAR COMPANY, OF DETROIT, MICHIGAN, A CORPORATION OF WEST VIRGINIA.

DESIGN FOR A HUB-CAP FOR MOTOR-VEHICLES.

No. 39,256. **Specification for Design.** **Patented April 7, 1908.**

Application filed March 4, 1907. Serial No. 360,621. Term of patent 14 years.

To all whom it may concern:

Be it known that I, RUSSELL HUFF, a citizen of the United States, residing at Detroit, in the county of Wayne and State of Michigan, have invented a new, original, and ornamental Design for Hub-Caps for Motor-Vehicles, of which the following is a specification, reference being had to the accompanying drawing, forming part thereof.

Figure 1 is a perspective view; Fig. 2 a side view; and Fig. 3 a front view of a hub cap for motor vehicles showing my new design.

I claim:

The ornamental design for a hub cap for motor vehicles as shown.

RUSSELL HUFF

Witnesses:

ALLEN LOOMIS,

MARK C. TAYLOR.

No. 891,697. PATENTED JUNE 23, 1908.

R. HUFF.

RADIATOR FAN FOR MOTOR VEHICLES.

APPLICATION FILED MAR. 26, 1907.

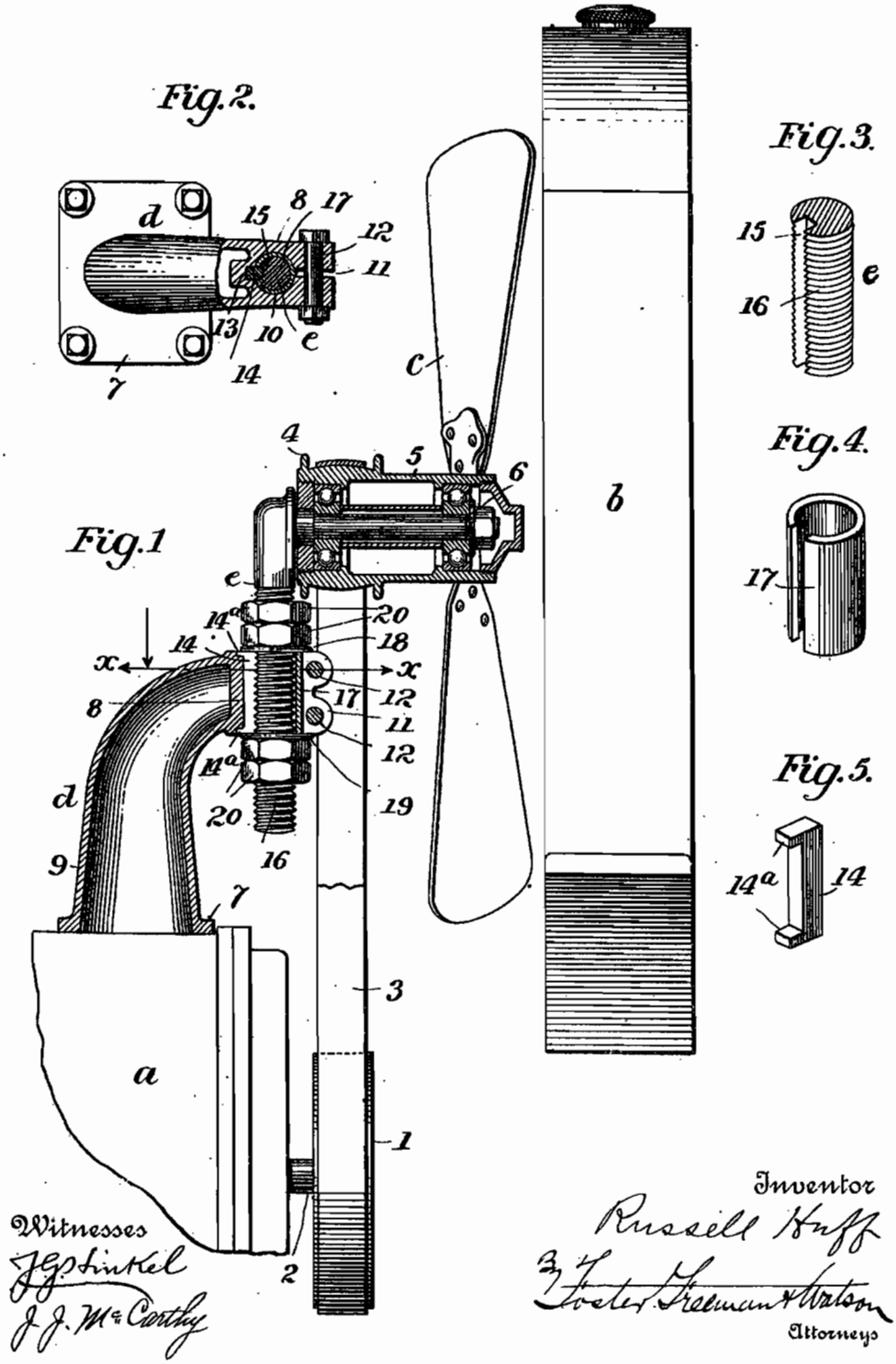

Witnesses
J. G. Pinkel
J. J. McCarthy

Inventor
Russell Huff
By Foster, Freeman & Watson
Attorneys

JOHNS PETERS, INC., LITHO., WASHINGTON D. C.

UNITED STATES PATENT OFFICE.

RUSSELL HUFF, OF DETROIT, MICHIGAN, ASSIGNOR TO PACKARD MOTOR CAR COMPANY, OF DETROIT, MICHIGAN, A CORPORATION OF WEST VIRGINIA.

RADIATOR-FAN FOR MOTOR-VEHICLES.

No. 891,697. Specification of Letters Patent. Patented June 23, 1908.

Application filed March 26, 1907. Serial No. 364,724.

To all whom it may concern:

Be it known that I, RUSSELL HUFF, a citizen of the United States, and resident of Detroit, Wayne county, State of Michigan, have invented certain new and useful Improvements in Radiator-Fans for Motor-Vehicles, of which the following is a specification.

This invention comprises certain improvements in devices for supporting and adjusting fans employed on motor vehicles for cooling the radiators used in connection with explosive engines.

The details and advantages of the improvements will be pointed out in the following specification, taken in connection with the accompanying drawing in which,

Figure 1 is a view showing my improved fan supporting device partly in central vertical section and partly in side elevation, the radiator and a portion of an explosive engine being also shown in side elevation; Fig. 2 is a section on the line X—X of Fig. 1; Fig. 3 is a perspective view of part of the adjustable stem or standard, and Figs. 4 and 5 are similar views of the split bushing and key.

Referring to the drawing, *a* indicates one end of the crank casing of an explosive engine, *b* indicates the radiator and *c* indicates the fan which is supported, opposite the radiator, by means of my improved adjustable supporting device. A pulley 1, upon the shaft 2, which is driven by the engine, is connected by a belt 3 to a pulley 4 on the fan hub 5, so that when the engine is running the fan is driven by the belt and draws air through the radiator.

The support for the fan comprises a bracket *d*, which is secured to the engine casing, and a threaded stem or standard *e*, which is adjustably secured to the bracket and has at its upper end a spindle 6 upon which the fan hub is mounted by means of suitable ball bearings, as shown. The bracket *d* is preferably made of aluminum, and cast hollow throughout the greater portion of its length, for the sake of lightness, and it is provided with a suitable base 7 for attachment to a fixed part of the engine. As shown in the drawing, the upper portion 8 of the bracket is turned over substantially at right angles to the trunk or body portion 9 and said end portion 8 has a cylindrical opening 10 bored through it and a slot 11 extends from said opening to the end of the bracket. A pair of clamping bolts 12 extend through the split end of the bracket. By turning the nuts on the bolts 12, the size of the opening 10 may be varied, as will be obvious, the end 8 of the bracket thus forming a clamp. The opening 10 is provided with a keyway 13, and a key 14 is arranged within said keyway and provided with flanged heads 14[a], which engage the bracket at each end of the opening and prevent longitudinal movement of the key when the parts are assembled. The stem *e* is also provided with a keyway 15 into which the key extends when the parts are assembled. The stem *e* extends through the opening 10, and as the bracket is made of aluminum, the threads 16 on the stem would cut into the aluminum if the stem were clamped directly by the walls of the opening 10. In order to avoid this, the stem *e* is made smaller than the opening 10, and a split sleeve or bushing of steel 17 is interposed between the walls of said opening and the threaded surface of the stem. As clearly shown in Fig. 2, the key 14 extends through the slot in the bushing and engages the keyways in the bracket and the stem. When the clamping bolts are tightened, the sleeve or bushing is compressed and grips the threaded surface of the stem. The key prevents the stem from turning and thus the fan spindle is always held in the same direction with respect to the bracket. Washers 18 and 19 are arranged upon the stem, above and below the opening in the bracket and nuts 20 for adjusting and locking the stem are arranged upon the stem, above and below the washers.

When it is desired to adjust the fan spindle so as to tighten or loosen the belt, the clamping bolts 12 are loosened and the nuts 20 are then turned to adjust the stem *e* in the proper direction. After the stem has been adjusted, the clamping bolts are tightened to grip the stem within the sleeve or bushing and the nuts 20 are set so as to cause the bracket to be clamped between the washers 18 and 19. The stem is thus clamped in position by the nuts on the stem and also the clamping bolts.

By employing the split steel bushing between the stem or spindle and clamp, I am enabled to make the bracket entirely out of aluminum and to key the stem to the bracket,

so as to prevent the stem from turning, and to grip the threaded surface of the stem firmly without injury to the aluminum clamp.

What I claim is

1. In an adjustable fan support, a bracket having a clamp, a threaded stem within said clamp, said stem having a fan spindle connected therewith and said clamp and stem having keyways, a key fitting within said keyways, and a split sleeve or bushing interposed between said spindle and clamp.

2. In an adjustable fan support, a bracket having a clamp, a threaded stem within said clamp, said stem having a fan spindle connected therewith and said clamp and stem having keyways, said key having flanged ends adapted to engage the bracket and prevent longitudinal movement of the key, and a split sleeve or bushing interposed between said spindle and clamp.

3. In an adjustable fan support, a bracket having a clamp, a threaded stem within said clamp, said stem having a fan spindle connected therewith and said clamp and stem having keyways, a key fitting within said keyways, a split sleeve or bushing interposed between said spindle and clamp, and adjusting nuts upon said stem.

4. In an adjustable fan support, an aluminum bracket having a split bearing provided with a keyway, a threaded stem within said bearing, said stem being also provided with a keyway and having a fan spindle connected therewith, a key fitting within said keyways, a split sleeve or bushing interposed between said spindle and the walls of said bearing, and means for clamping the bearing about the sleeve.

5. In an adjustable fan support, an aluminum bracket having a split bearing provided with a keyway, a threaded stem within said bearing, said stem being also provided with a keyway and having a fan spindle connected therewith, a key fitting within said keyways, a split sleeve or bushing interposed between said spindle and the walls of said bearing, means for clamping the bearing about the sleeve, and adjusting nuts upon said stem.

6. In an adjustable fan support, a bracket having a clamp, a threaded stem within said clamp, said stem having a fan spindle connected therewith, a sleeve or bushing interposed between said spindle and clamp, and means engaging both the stem and the bracket for preventing the stem from turning within the clamp without obstructing its longitudinal adjustment.

7. In an adjustable fan support, a bracket having a clamp, a threaded stem within said clamp, said stem having a fan spindle connected therewith, a split stem or bushing interposed between said spindle and clamp, and means engaging both the stem and the bracket for preventing the stem from turning within the clamp without obstructing its longitudinal adjustment.

8. In an adjustable fan support, a bracket having a clamp, a threaded stem within said clamp, said stem having a fan spindle connected therewith and having a keyway, a split sleeve or bushing interposed betweem said spindle and clamp, and a device engaging the bracket and extending through the slot in said sleeve and into said keyway for preventing the stem from turning within the clamp.

In testimony whereof I affix my signature in presence of two witnesses.

RUSSELL HUFF.

Witnesses:
ALLEN LOOMIS,
VINCENT LINK.

A. LOOMIS.

UNIVERSALLY JOINTED SHAFT.

APPLICATION FILED MAR. 26, 1907.

1,010,060. Patented Nov. 28, 1911.

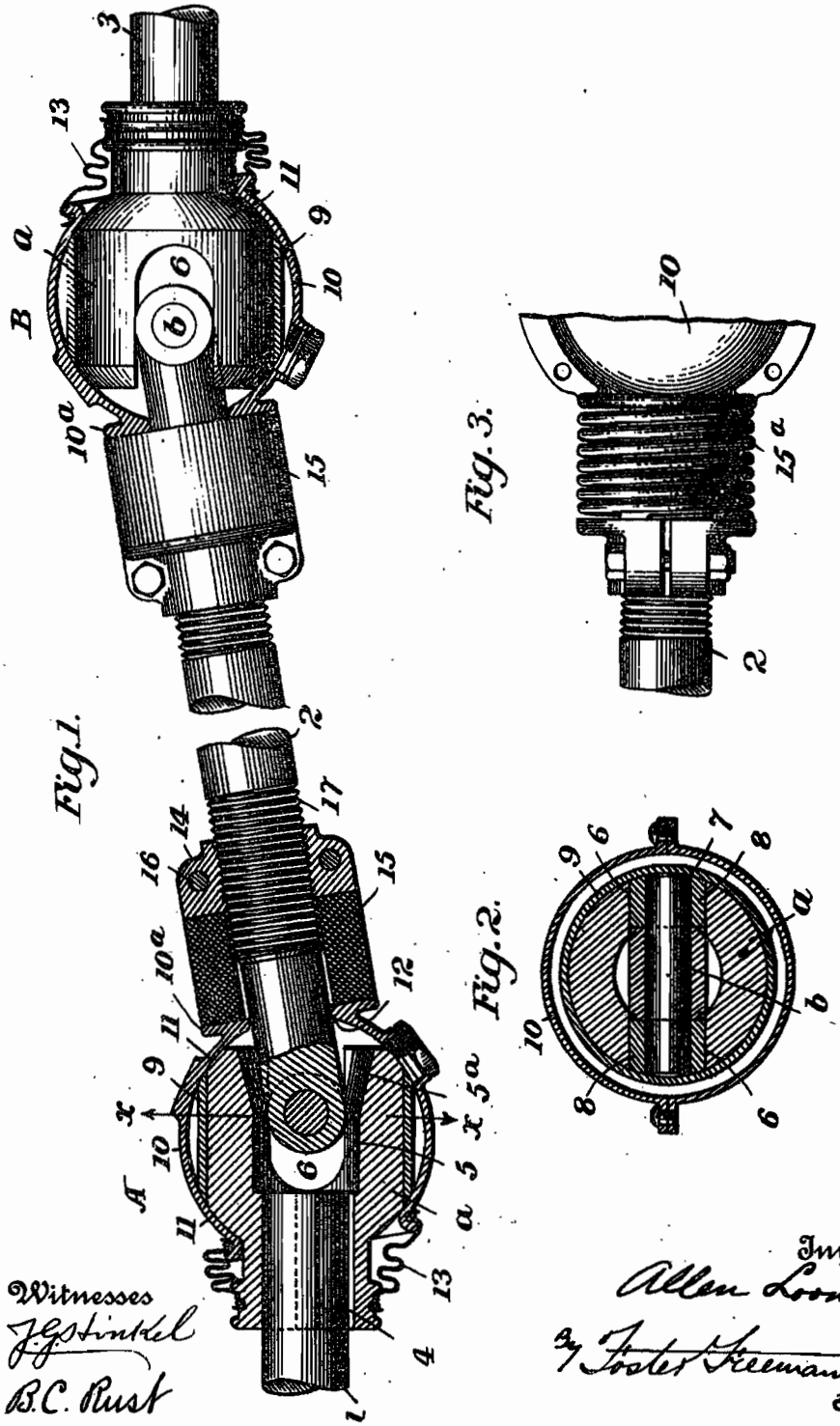

Witnesses
J. G. Stinkel
B. C. Rust

Inventor
Allen Loomis
By Foster Freeman & Watson
Attorneys

UNITED STATES PATENT OFFICE.

ALLEN LOOMIS, OF DETROIT, MICHIGAN, ASSIGNOR, BY MESNE ASSIGNMENTS, TO PACKARD MOTOR CAR COMPANY, OF DETROIT, MICHIGAN, A CORPORATION OF MICHIGAN.

UNIVERSALLY-JOINTED SHAFT.

1,010,060. Specification of Letters Patent. Patented Nov. 28, 1911.

Application filed March 26, 1907. Serial No. 364,707.

To all whom it may concern:

Be it known that I, ALLEN LOOMIS, a citizen of the United States, and resident of Detroit, Wayne county, State of Michigan, have invented certain new and useful Improvements in Universally-Jointed Shafts, of which the following is a specification.

This invention comprises improvements in universal joints for sectional shafts, and it relates particularly to means for permitting an intermediate section of a shaft to play endwise relatively to the adjoining sections and for holding the intermediate section in a central position relatively to the coupling members of the adjoining sections, and also to means for excluding dust from, and retaining lubricant within, the universal joints.

My improvements are particularly adapted for use in connection with the transmission shafts of automobiles, wherein there is a relative up and down movement between the clutch shaft and the shaft connected with the differential gearing.

In the accompanying drawing, Figure 1 is a side elevation of portions of three sections of a shaft having my improvements, one of the couplings being shown in longitudinal section; Fig. 2 is a section through one of the couplings on the line X—X of Fig. 1, and Fig. 3 is a detail view showing a modified form of spring for holding the intermediate section of the shaft in position.

Referring to Figs. 1 and 2 of the drawing, 1, 2 and 3 indicate shaft sections connected together by universal joints A and B. The shaft or section 3 may, for convenience, be referred to as the driving shaft, the section 2 may be referred to as the intermediate shaft or section, and the shaft 1 may be called the driven shaft. The joints A and B are alike in construction. Upon the driving and driven shafts are arranged coupling members *a*, which are suitably secured to said shafts by keys 4. The member *a* of each coupling has a socket 5 which flares outwardly at the end, as shown at 5^a, and it has diametrically opposite guide slots 6. The intermediate shaft section 2 has at its ends joint members each comprising a pin 7, which extends through the shaft section and carries at its ends a pair of rollers 8, which are movable within the guide slots 6. A sleeve 9 surrounds the member *a* and holds the rollers in position upon the pin, and the outer faces of the rollers are conoidal, as shown, conforming to the inner curved face of the sleeve so as to permit the play of the member *b*, which comprises the pin 7 and rollers 8, as it takes positions at angles to the axis of the member *a*. A spherical metal casing 10 is mounted on the member *a* and rests against spherical bearing surfaces 11 upon said member. This casing has an opening 12 through which the intermediate shaft section 2 extends, and a flexible guard 13 is arranged between the hub of the member *a* and the adjacent end of the casing 10, to exclude dust from the casing and bearing surfaces at that end of the casing which is opposite the opening 12. The casing both excludes the dust from the joint and retains the lubricant.

The construction of the joint, so far described, is substantially the same as that shown in the copending application of Russell Huff, Serial Number 323,604, filed June 27, 1906. In the invention disclosed in said copending application, metal springs are arranged within the sockets of the coupling members for the purpose of holding the intermediate shaft section in central position between the coupling members of the driving and driven shafts. In the present invention instead of arranging springs within the sockets, I arrange upon the intermediate shaft section, near each end, a stop 14, and between said stop and a flange 10^a on the adjacent casing 10, I arrange a spring 15. This spring preferably consists of a ring of solid rubber, as shown in Fig. 1, which completely surrounds the shaft section and incloses the space between the flange 10^a and the stop 14, thus serving as a spring and also as a means for excluding dust from the coupling and for retaining the lubricant. Each stop 14 preferably consists of a collar made in two parts, which parts are connected together by bolts 16. The shaft has threads 17 near each end and the collars 14 are threaded and fit on to the threaded portions of the shaft so that the collars may be adjusted to give the required degree of tension to the springs. Instead of making the springs out of rubber, I may employ coil springs 15^a, as shown in Fig. 3: but I prefer to use rubber as this substance also serves as an inclosure for excluding dust and retaining the lubricant, and it is not liable to breakage.

The spring, in my invention, being outside of the socket of the joint, is always readily inspected, and the socketed member

of the joint can be made shorter than if the spring were arranged within the socket. This shortening of the sockets on the transmission shaft of a motor vehicle allows the intermediate shaft section to be made correspondingly longer and lessens the angles between the shaft sections. The intermediate shaft section, being always centered by the springs between the adjoining sections, and having a sufficient amount of end play in the sockets of the joints, the ends of the intermediate section can not strike against either of the adjoining sections when the latter move vertically relatively to one another, thus preventing noise and breakage, or injury to the parts.

What I claim is—

1. The combination with two shaft sections and a universal joint connecting said sections so that one may be rotated by the other and permitting relative endwise movement of the sections, of a casing having a spherical bearing on the joint-member on one shaft section, a stop on the other shaft section, and a spring interposed between said stop and casing.

2. The combination with two shaft sections and a universal joint connecting said sections so that one may be rotated by the other and permitting relative endwise movement of the sections, of a casing having a spherical bearing on the joint-member on one shaft section, an adjustable stop on the other shaft section, and a spring interposed between said stop and casing.

3. The combination with two shaft sections and a universal joint connecting said sections so that one may be rotated by the other and permitting relative endwise movement of the sections, of a casing having a spherical bearing on the joint-member on one shaft section, a stop on the other shaft section, and a rubber ring interposed between said stop and casing.

4. The combination with two shaft sections and a universal joint connecting said sections so that one may be rotated by the other and permitting relative endwise movement of the sections, of a casing having a spherical bearing on the joint-member of one shaft section, a collar threaded on to the other shaft section, and a rubber ring interposed between said collar and casing.

5. The combination with two shaft sections and a universal joint connecting said sections so that one may be rotated by the other, of a rigid spherical casing movably fitted to the joint-member on one shaft section and having an opening through which the other shaft section extends, a stop on said latter section and a rubber ring interposed between said stop and casing.

6. The combination with two shaft sections and a universal joint connecting said sections so that one may be rotated by the other, of a rigid spherical casing movably fitted to the joint-member on one shaft section and having an opening through which the other shaft section extends, a collar threaded on to said latter section and a rubber ring interposed between said collar and casing.

7. The combination with a driving shaft and a shaft to be driven, each having universal joint members thereon, of spherical casings movably fitted to said members, an intermediate shaft section extending through said casings and having joint members at its ends engaging the members on the driving and driven shafts, stops upon said intermediate shaft and rubber rings interposed between said stops and casings.

8. The combination with a driving shaft and a shaft to be driven, each having universal joint members thereon, of spherical casings movably fitted to said members, an intermediate shaft section extending through said casings and having joint members at its ends engaging the members on the driving and driven shaft, collars threaded upon said intermediate shaft, and rubber rings interposed between said stops and casings.

9. The combination with a driving shaft and a shaft to be driven, each having universal joint members thereon, of spherical casings movably fitted to said members, an intermediate shaft section extending through said casings and having joint members at its ends engaging the members on the driving and driven shafts, and rubber spring packing on the intermediate shaft constructed to bear against both casings.

10. The combination with a driving shaft and a shaft to be driven, each having universal joint members thereon, of an intermediate shaft section having joint members at its ends engaging the joint members on the driving and driven shafts, said joint members being constructed to permit a relative endwise movement, and means for centering said intermediate shaft.

11. The combination with a driving shaft and a shaft to be driven, each having universal joint members thereon, of an intermediate shaft section having joint members at its ends engaging the joint members on the driving and driven shafts, said joint members being constructed to permit a relative endwise movement, and spring means on said intermediate shaft for centering it.

In testimony whereof I affix my signature in presence of two witnesses.

ALLEN LOOMIS.

Witnesses:
VINCENT LINK,
MILTON TIBBETTS.

✓ 296/114

R. HUFF.

FOLDING TOP SUPPORT BRACKET.

APPLICATION FILED MAR. 26, 1907.

1,090,538.

Patented Mar. 17, 1914.

2 SHEETS—SHEET 1.

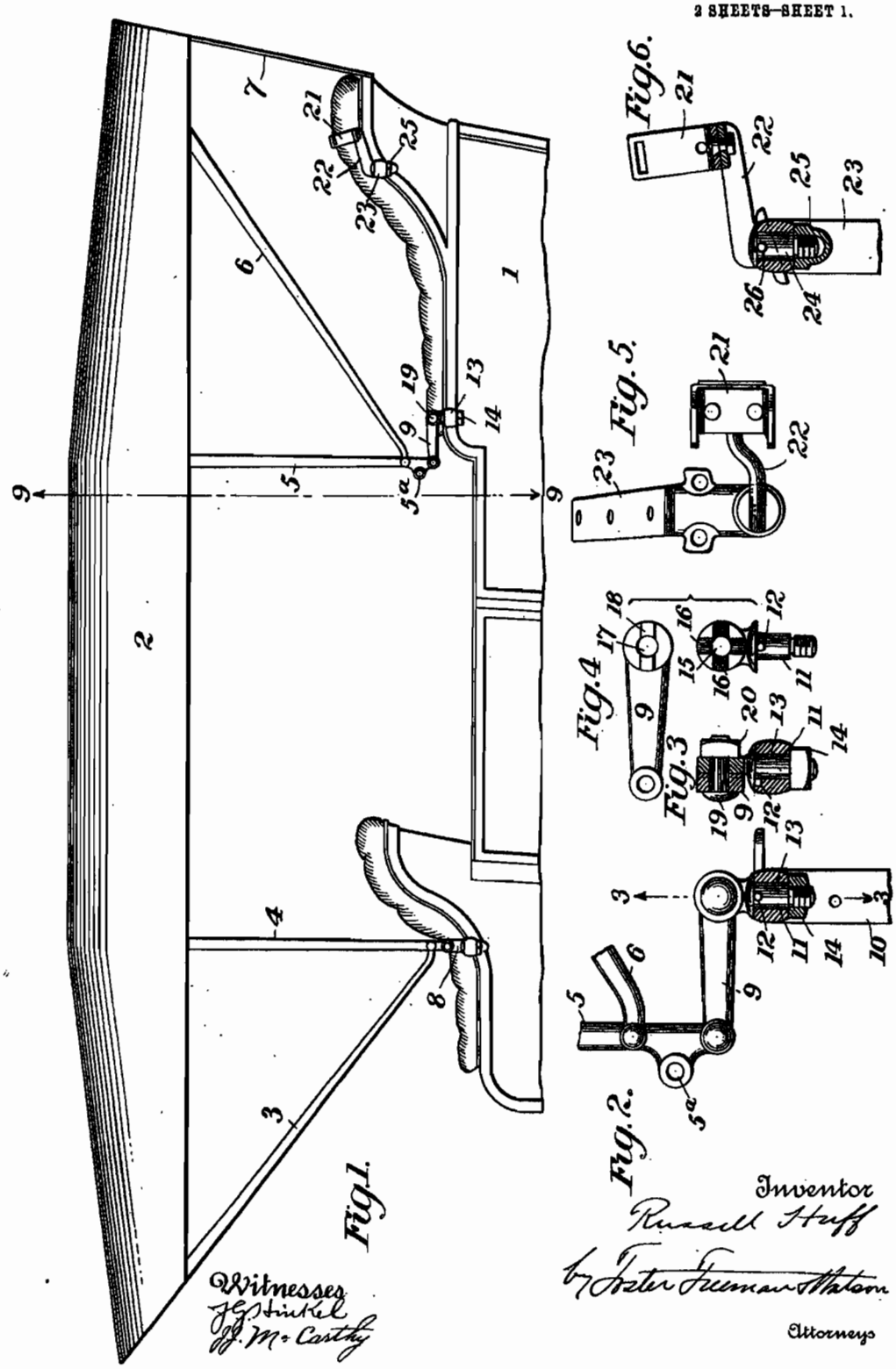

Witnesses
J. G. Stinkel
J. M. Carthy

Inventor
Russell Huff
by Foster Freeman & Watson
Attorneys

COLUMBIA PLANOGRAPH CO., WASHINGTON, D. C.

R. HUFF.

FOLDING TOP SUPPORT BRACKET.

APPLICATION FILED MAR. 26, 1907.

1,090,538.

Patented Mar. 17, 1914.

2 SHEETS—SHEET 2.

Fig. 7.

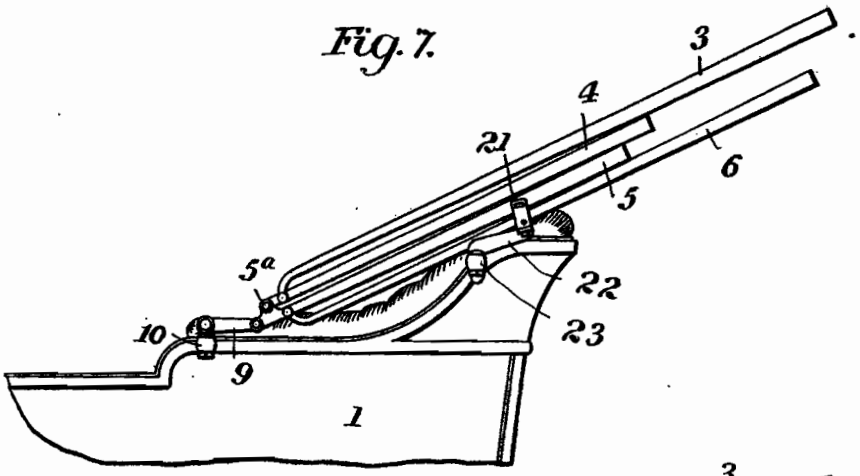

Fig. 8.

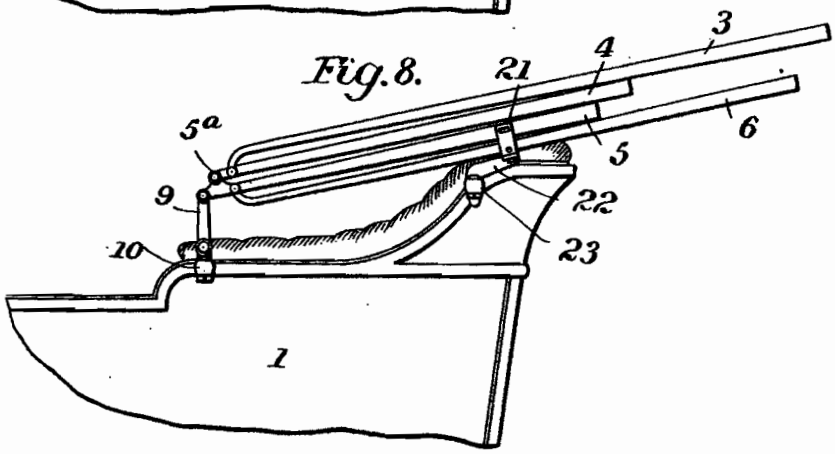

Fig. 9.

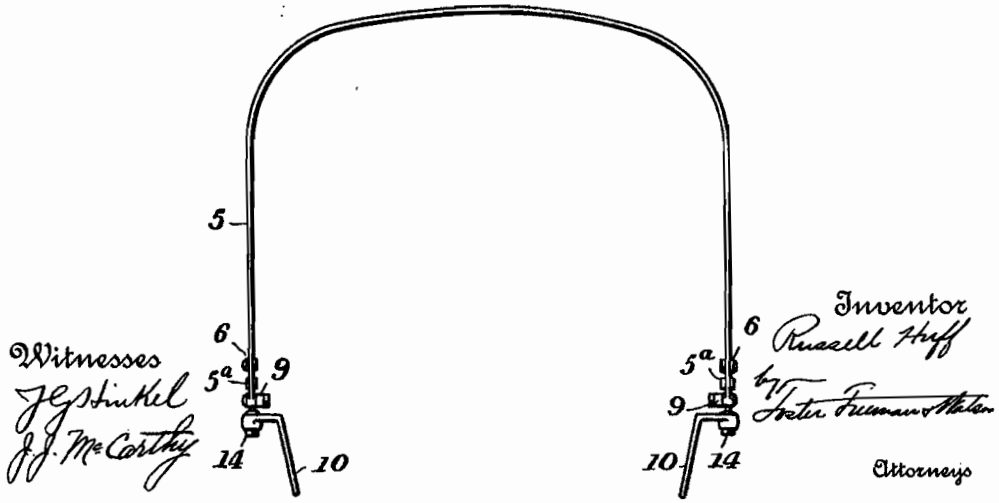

Witnesses
J. G. Stinkel
J. J. McCarthy

Inventor
Russell Huff
by Foster Freeman & Watson
Attorneys

COLUMBIA PLANOGRAPH CO., WASHINGTON, D. C.

UNITED STATES PATENT OFFICE.

RUSSELL HUFF, OF DETROIT, MICHIGAN, ASSIGNOR, BY MESNE ASSIGNMENTS, TO PACKARD MOTOR CAR COMPANY, OF DETROIT, MICHIGAN, A CORPORATION OF MICHIGAN.

FOLDING-TOP-SUPPORT BRACKET.

1,090,538. Specification of Letters Patent. Patented Mar. 17, 1914.

Application filed March 26, 1907. Serial No. 364,722.

To all whom it may concern:

Be it known that I, RUSSELL HUFF, a citizen of the United States, and resident of Detroit, county of Wayne, State of Michigan, have invented certain new and useful Improvements in Folding-Top-Support Brackets, of which the following is a specification.

The present invention relates to improvements in brackets for use in connection with folding tops for vehicles, and particularly with such tops as are employed with motor cars.

In constructing folding tops for motor cars, particularly with cars having extremely long bodies and high rear seat panels, difficulty has been experienced in arranging the bow immediately in front of the rear seat so that it will properly support the top when extended, and when the latter is folded will fall back of said seat.

The particular object of the present invention is to provide a bracket support for this bow which will meet these requirements.

The invention is illustrated in the accompanying drawings, in which—

Figure 1 is a side elevation of a portion of a motor car having a top including a bracket support constructed in accordance with this invention. Fig. 2 is a detail view on an enlarged scale, and partly in section, of the improved bracket. Fig. 3 is a sectional view on the line 3—3 of Fig. 2. Fig. 4 illustrates two of the members of the improved bracket detached. Figs. 5 and 6 are, respectively, a plan and sectional elevation of a support employed for holding the top when it is in its folded position. Figs. 7 and 8 are elevations illustrating two different folded positions of the top. Fig. 9 is a sectional view on the line 9—9 of Fig. 1.

Referring to the drawings, 1 designates the body of the motor vehicle or car, and 2 the canopy or cover of the folding top, the latter being supported on suitable bows 3, 4, 5 and 6, and provided with a rear curtain 7. When the top is in use the forward bows 3, 4, are supported by suitable brackets 8 on the car, one on each side thereof, said bows being detachably connected therewith, and the rear bows 5, 6, are connected to arms 9 of other brackets on the car. The connection between the bracket arms 9 and the bows 5, 6 includes an ear 5^a with which the forward bows 3, 4 are connected when the top is in its folded position.

With the devices heretofore employed for supporting the rear bows 5, 6, it has been necessary in order that the bow 5 may support the top properly and prevent sagging thereof when in use, to make such bow undesirably high in order that it might not interfere with passengers in the car and that it might properly fall back of the rear seat when the top is in its folded position. According to the present invention, the arm 9 is so supported that it may be adjusted into either of three positions, and when the top is in use, such arm extends forwardly from its connection with the frame of the car, as shown in Figs. 1 and 2. When the top is folded, and supported in a position substantially horizontal, as indicated in Fig. 8, said arm 9 extends upwardly from its support on the car, and when the top is folded into the position shown in Fig. 7, said arm extends horizontally and rearwardly from its said point of support.

The arm 9 is mounted on a post which is supported in a bracket 10 rigidly fastened to the car body 1. The stem or body 11 of the post is provided with a laterally projecting pin or stud 12, which engages a suitable recess in the wall of the socket 13, thus preventing rotation of the post relative to the socket and the lower end of said post is threaded to receive a nut 14 by which it is held from vertical movement in the socket 13 or passage formed at the upper end of the bracket 10. The upper end of the post is expanded into a disk-like head which is provided with a central aperture 15, and in one face of which disk-like head there are provided a plurality of grooves 16 extending radially from said aperture. At one end the arm 9 is provided with an aperture 17, and one face of said arm has a pair of diametrically opposed lugs 18 adapted to enter the grooves 16 in the disk-like head of the supporting post, said arm and post being held together by a bolt 19 and nut 20.

When the parts are in the position shown in Fig. 1 the lugs 18 are in engagement with the horizontal grooves 16 in the head of the post, and if it is desired to fold the top into the position shown in Fig. 8 the nut 20 is loosened sufficiently to permit of turning the arm 9 from its forward horizontal position

to the upward or vertical position, when the lugs 18 will engage the vertical grooves 16 and the parts can be held securely in this position by tightening the nut 20. To fold the top into the position shown in Fig. 7, the nut 20 is again loosened and the arm 9 turned into its rearward horizontal position the parts being again secured by tightening the nut 20.

The weight of the top when folded is partially supported by a clip 21 carried by an arm 22 which is mounted in a socket or passage formed in the horizontal arm of a bracket 23 secured to the car body in rear of the bracket 10. The bracket 23 is of the same general character as that of the supporting post carrying arm 9, and the arm 22 is provided with a depending stud or pin 24, which is held in said socket by the nut 25 secured on its lower end, and is prevented from turning in the socket by the lateral projecting pin 26 engaging a suitable stop or recess in the passage through which it extends.

The advantages of the bracket herein described will be readily apparent. It will be seen that by supporting the arm 9 so that it may extend either forwardly, upwardly or rearwardly, from its point of attachment to the car body, it is possible to arrange the bow 5 so far forward that it will properly support the top when in use without making it undesirably high, and on the other hand, when the top is not in use, such bow will be carried so far to the rear that it will pass behind the rear seat and not interfere with the passengers thereon.

Having thus described the invention, what is claimed is:

The combination with a vehicle body, of a folding top including a frame consisting of suitable bows and front and rear supports for said bows, the rear bow supports each comprising a pivotally mounted arm adapted to be adjusted to extend forwardly, rearwardly or upwardly from its pivotal point, and means for locking said arm in any of said positions, said arms extending rearwardly when the top is in folded position.

In testimony whereof I affix my signature in presence of two witnesses.

RUSSELL HUFF.

Witnesses:
ALLEN LOOMIS,
VINCENT LINK.

Copies of this patent may be obtained for five cents each, by addressing the "Commissioner of Patents, Washington, D. C."

✓ 137/614.2

R. HUFF.

DRAIN COCK FOR MOTOR VEHICLE CASES.

APPLICATION FILED APR. 27, 1907.

903,979. Patented Nov. 17, 1908.

Fig. 1.

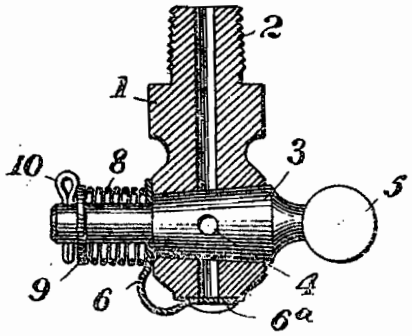

Fig. 2.

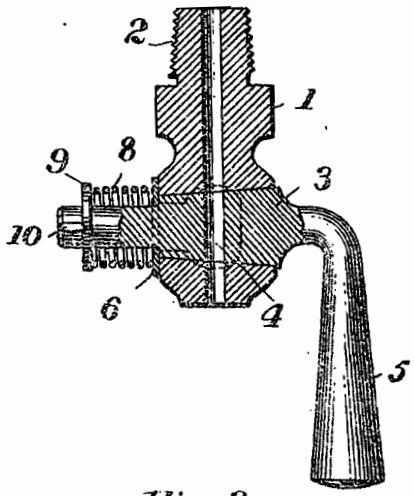

Fig. 3.

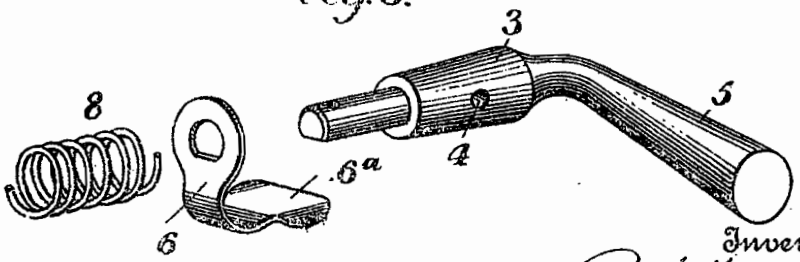

Witnesses.

J. G. Stinkel

J. J. McCarthy

Inventor

R. Huff

by Foster Freeman Watson & Coe

Attorneys

UNITED STATES PATENT OFFICE.

RUSSELL HUFF, OF DETROIT, MICHIGAN, ASSIGNOR TO PACKARD MOTOR CAR COMPANY, OF DETROIT, MICHIGAN, A CORPORATION OF WEST VIRGINIA.

DRAIN-COCK FOR MOTOR-VEHICLE CASES.

No. 903,979. Specification of Letters Patent. Patented Nov. 17, 1908.

Application filed April 27, 1907. Serial No. 370,621.

To all whom it may concern:

Be it known that I, RUSSELL HUFF, a citizen of the United States, and resident of Detroit, Wayne county, State of Michigan, have invented certain new and useful Improvements in Drain-Cocks for Motor-Vehicle Cases, of which the following is a specification:

The present invention relates to improvements in drain cocks and particularly to such devices as are employed on motor vehicles.

In a motor vehicle the drain cocks from the crank and gear cases and other parts, are necessarily so located as to be exposed to mud and dust thrown by the wheels when the vehicle is in motion and the outlets thereof quickly become so clogged that it is impossible for fluid to pass until they have been cleaned by a wire or other means.

The object of the present invention is to provide a drain cock the outlet of which will not become thus clogged and which can be opened at any time by simply turning the plug.

The invention is illustrated in the accompanying drawing in which,

Figure 1 is a longitudinal sectional view through a drain cock constructed in accordance with the present invention showing the plug in closed position; Fig. 2 is a similar view, the plug being turned to open the passage through the cock; Fig. 3 illustrates the plug and parts connected therewith detached from the body of the cock.

Referring to the drawings, it will be seen that the cock comprises a body 1 having a suitable passage therethrough and provided at one end with a threaded section 2 by means of which it may be secured in a suitable threaded passage. At an intermediate point in its length the body 1 is suitably enlarged and provided with a transverse passage through which extends a tapered plug 3 having therein a passage 4 which as the plug is turned will aline with the passage through the cock, to permit fluid to flow therethrough. When the plug is turned to the position shown in Fig. 1, the passage 4 therein is out of alinement with the passage in the cock, or the plug is in the closed position.

The plug 3 is formed integral with a handle 5 which extends substantially at right angles to the length of the plug, and the smaller end of the plug extends beyond the body 1, being reduced in size, and, as shown, preferably made polygonal in cross section. When the plug is in its closed position the outlet of the passage through the cock is closed by a guard or shield 6 which, as shown, is mounted upon the polygonal shaped section of the plug so as to turn therewith. This shield is held close against the body of the cock by a spring 8 which is compressed between said shield and a washer 9 secured to the projecting portion of the plug by a cotter key 10.

The surface of the body 1 of the cock surrounding the outlet opening therein is made flat and the guard or shield 6 is of such form and so related to the plug that when the latter is in its closed position the plate like portion 6^a of said guard will contact closely with the flat surface on the cock and thus act to hold the plug in its closed position.

As shown the shield or guard 6 is made from a single blank of sheet metal bent into substantially right angled form and having at one end a polygonal aperture conforming in cross section to the shape of the section of the plug which extends therethrough, the free end of said guard being expanded into a plate like section 6^a which as above described is adapted to closely contact with the flat surface about the outlet to the cock and effectually prevent the entrance of anything into the passage of the cock when the plug therein is in its closed position.

Having thus described the invention what is claimed and desired to be secured by Letters-Patent is,

1. The combination with a drain cock for motor-vehicles, having a body and plug, of a guard having one end connected with a portion of the plug and having its free end adapted to extend across the outlet when the plug is in closed position, and a spring surrounding the plug and holding the parts in proper relative position.

2. The combination with a drain cock for motor vehicles, of a guard having one end

connected with a portion of the plug of the cock and provided at its free end with a plate-like section adapted to extend across the outlet when the plug is in closed position, and a spring engaging said guard and holding it in contact with the body of the plug, substantially as described.

In testimony whereof I affix my signature in presence of two witnesses.

RUSSELL HUFF.

Witnesses:
JNO. D. CURRY,
EDWIN F. RAUSS.

✓ 123/41.21 123/41.29

R. HUFF.

WATER COOLING SYSTEM FOR HYDROCARBON ENGINES.

APPLICATION FILED MAY 20, 1907.

1,028,115.

Patented June 4, 1912.

2 SHEETS—SHEET 1.

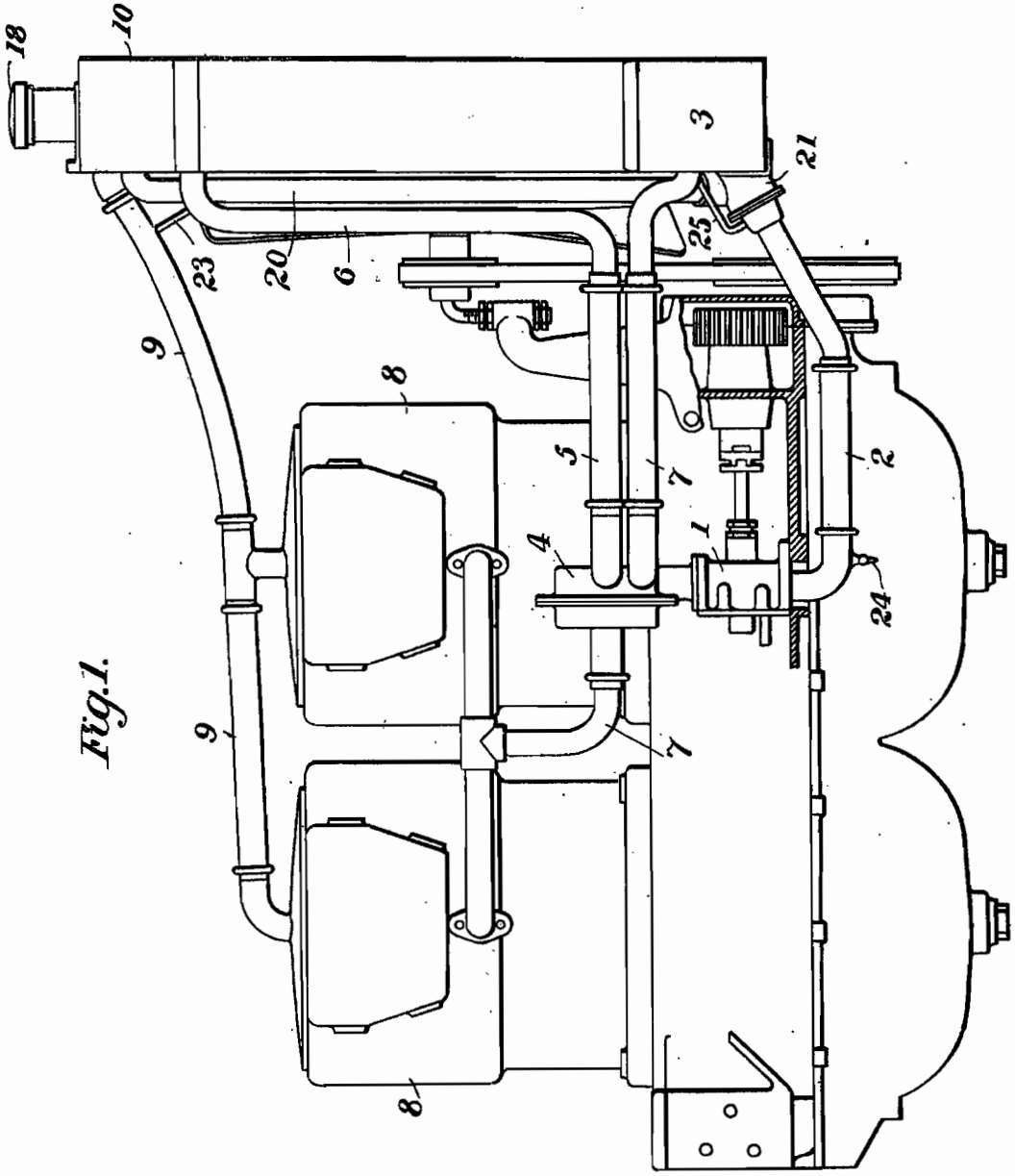

Fig. 1.

Witnesses

J. G. Stinkel

J. J. McCarthy

Inventor

Russell Huff

by Foster Freeman Watson & Coit

Attorneys

R. HUFF.

WATER COOLING SYSTEM FOR HYDROCARBON ENGINES.

APPLICATION FILED MAY 20, 1907.

1,028,115.

Patented June 4, 1912.

2 SHEETS—SHEET 2.

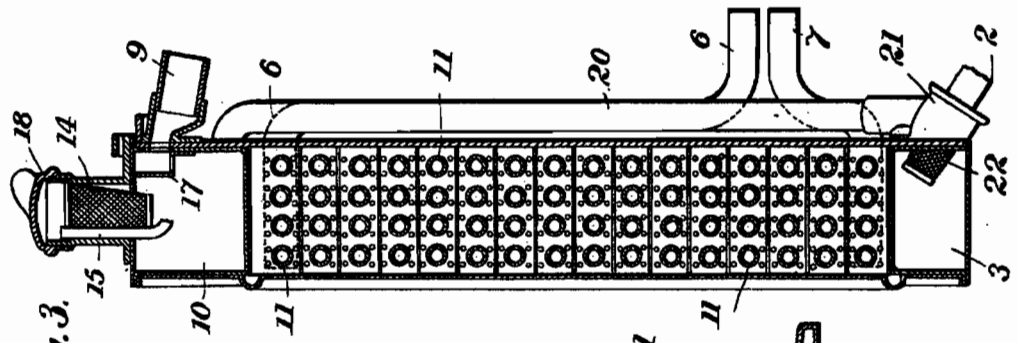

Fig. 3.

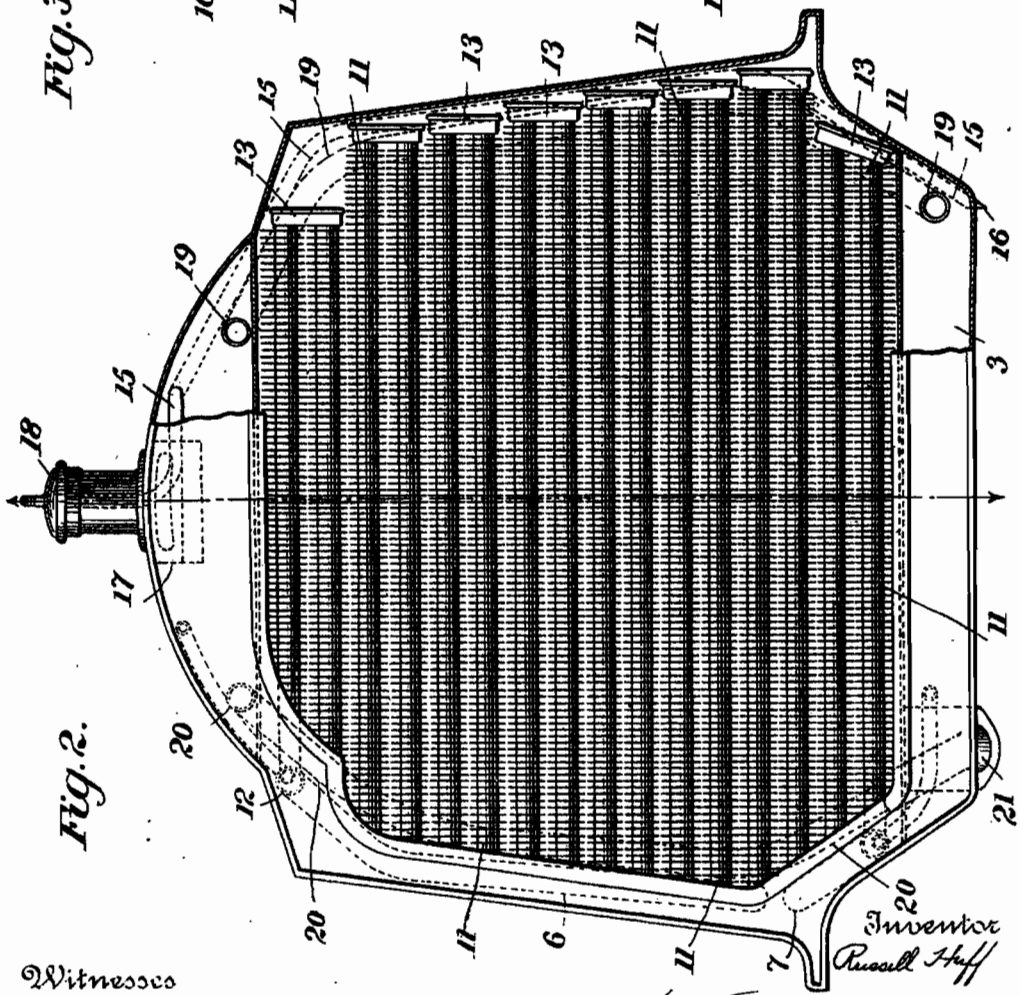

Fig. 2.

Witnesses

J. G. Stinkel

J. J. McCarthy

Inventor

Russell Huff

by Foster Freeman Watson & Coit

Attorneys

UNITED STATES PATENT OFFICE.

RUSSELL HUFF, OF DETROIT, MICHIGAN, ASSIGNOR, BY MESNE ASSIGNMENTS, TO PACKARD MOTOR CAR COMPANY, OF DETROIT, MICHIGAN, A CORPORATION OF MICHIGAN.

WATER-COOLING SYSTEM FOR HYDROCARBON-ENGINES.

1,028,115. Specification of Letters Patent. Patented June 4, 1912.

Application filed May 20, 1907. Serial No. 374,664.

To all whom it may concern:

Be it known that I, RUSSELL HUFF, a citizen of the United States, and resident of Detroit, Wayne county, State of Michigan, have invented certain new and useful Improvements in Water-Cooling Systems for Hydrocarbon-Engines, of which the following is a specification.

The present invention relates to improvements in the cooling systems for the explosive engines of motor vehicles and has for its object to provide a system, the parts of which shall be compactly arranged and so related as to secure a more effective cooling action than has been possible with the systems heretofore proposed.

A further object of the invention is to provide a radiator for such a cooling system which shall be very durable and which will provide a maximum amount of radiating surface without undesirably increasing the size or weight of the device.

In the accompanying drawings, Figure 1 is a diagrammatic view of a cooling system constructed in accordance with the present invention and applied to an engine having two explosive chambers; Fig. 2 is a front elevation and partial section of the radiator; Fig. 3 is a vertical sectional view through the radiator.

Referring to the drawings, 1 designates a pump of any suitable construction by which, when the engine is in operation, water is circulated through the cooling system, said pump being connected by a pipe 2 with a supply tank 3. From the pump 1 the water is forced through a governor 4 into a pipe 5 which is connected with the inlet pipe 6 of the radiator which will be more particularly described hereinafter. The outlet from the radiator is connected through a pipe 7 with the water jackets of the engine cylinders 8 and the latter are connected through a pipe 9 with a supplemental tank 10 which is in turn connected with the tank 3, as will be hereinafter more particularly described.

It will be noticed that according to the present invention the radiator is arranged between the pump and the water jacket of the engine cylinders and thereby the pump is caused to positively force the water through the radiator and also to provide a maximum pressure within the governor 4. This governor is preferably of the character shown in my prior application Serial No. 282,844.

The radiator comprises a plurality of series of horizontally arranged tubes 11 each having a relatively large number of radially projecting fins; and said tubes are so arranged and connected that a maximum amount of radiating surface is provided. As shown there are four tubes 11 in each series and the inlet pipe 6 is connected directly with the upper series of said tubes through a manifold 12. At their opposite ends said upper series of tubes 11 are connected by a junction box 13 with the tubes of the next lower series and the latter in turn are connected at their other ends, by a similar connection, with the tubes of the third series. This connection of the series of tubes alternately at opposite sides of the radiator causes the water to circulate back and forth through all of the series of tubes before reaching the radiator discharge outlet or pipe 7.

The heated water passing through the pipe 9 from the jackets of the engine cylinders enters the supplemental tank 10 at a point above the water line therein. Within said supplemental tank is arranged a strainer 14 and said tank is also provided with an overflow pipe 15 which extends therefrom along the outside of the radiator to the lower end thereof, this discharge opening being indicated at 16. The water entering the tank at 10 sometimes contains considerable steam and the latter separates in said chamber from the water and escapes through the pipe 15 to the atmosphere. To prevent splashing or the passage of water into the pipe 15, and to assist in the separation of the steam and water, a baffle 17 is arranged within the tank 10 in line with the pipe 9. The upper end of the tank 10 is closed by a suitable removable cap 18. The water in the tank 10, from which the steam has been separated as above described, passes to the lower tank 3 through two pipes 19, 20, extending along opposite sides of the radiator. The pipe 19 empties directly into the tank 3, while the pipe 20 is connected with the outlet casting 21 to which the pump supply pipe 2 is connected. A suitable strainer 22 is arranged within the tank 3 at the entrance to the pipe 2.

The radiator is also provided with a vent 23 which connects pipes 6 and 9, the latter being as before described, in communication with the atmosphere through the supplemental tank 10 and operflow pipe 15.

In order that the entire system may be drained when desired, a drain cock 24 is provided in the pipe 2 and the latter is connected through a branch 25 with the lowest point in the pipe 7. The pipes 23 and 25 are of such small diameter that they do not materially impair the circulation of water through the system.

It will be noticed that by this invention all of the parts of the system are compactly arranged, the radiator being mounted on the main supply tank 3 and the steam separator or supplemental tank 10 being supported by and forming part of the radiator. By this arrangement it is possible to effect a material saving both as regards the weight of the parts and the cost of manufacturing the same. It will be noticed that when in use there is a circulation of water through every part of the system, that is, the water circulates through both the main and supplemental tanks as well as the radiator and several pipes and the use of stand pipes or storage reservoirs, such as have heretofore been commonly employed is avoided.

Having thus described my invention what I claim is,

1. The combination with the water jacket of an engine of the class described, of two tanks arranged one above the other, a radiator between said tanks, a pump, a conduit leading from the lower tank to the pump, a conduit leading from the pump to the radiator, a conduit leading from the radiator to the water jacket, a conduit leading from the water jacket to the upper reservoir, and a conduit leading from the upper reservoir to the lower reservoir, for the purpose set forth.

2. The combination of a water jacket surrounding the cylinder of a motor vehicle engine, a tank, a conduit connecting the cylinder jacket and tank, an overflow pipe communicating with the upper portion of the tank, and a baffle arranged in the tank opposite the discharge opening of said conduit, for assisting in condensing the steam contained in the water entering the tank from the cylinder jacket.

In testimony whereof I affix my signature in presence of two witnesses.

RUSSELL HUFF.

Witnesses:
JNO. D. CURRY,
EDWIN F. RAUSS.

R. HUFF.

TRANSMISSION SHAFT FOR MOTOR VEHICLES.

APPLICATION FILED AUG. 24, 1907.

1,167,695. Patented Jan. 11, 1916.

Fig. 1.

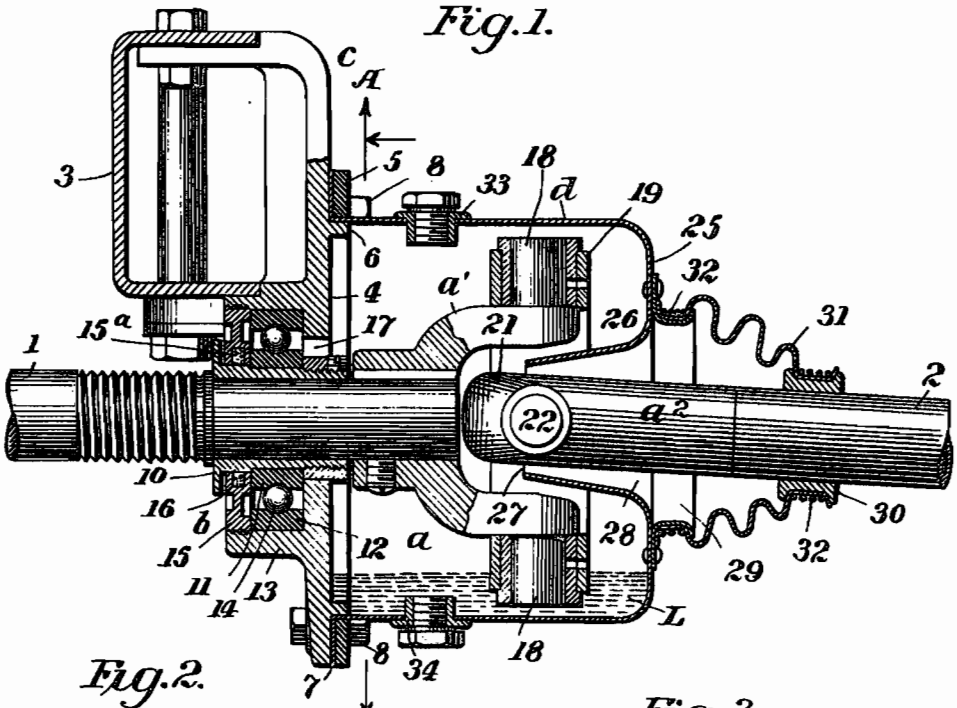

Fig. 2.

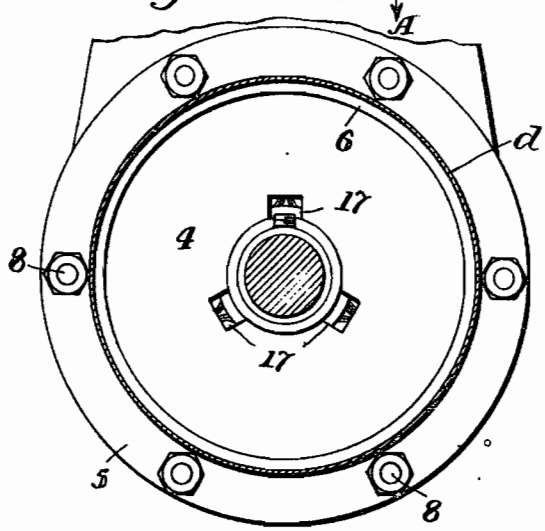

Fig. 3.

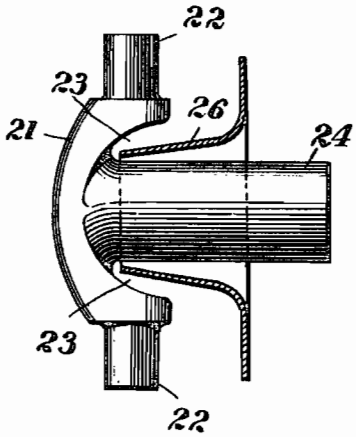

Witnesses
J. G. Sinkel
J. J. McCarthy

Inventor
Russell Huff
by Foster Freeman Valentine & Co.
Attorneys

UNITED STATES PATENT OFFICE.

RUSSELL HUFF, OF DETROIT, MICHIGAN, ASSIGNOR, BY MESNE ASSIGNMENTS, TO PACKARD MOTOR CAR COMPANY, OF DETROIT, MICHIGAN, A CORPORATION OF MICHIGAN.

TRANSMISSION-SHAFT FOR MOTOR-VEHICLES.

1,167,695. Specification of Letters Patent. Patented Jan. 11, 1916.

Application filed August 24, 1907. Serial No. 390,021.

To all whom it may concern:

Be it known that I, RUSSELL HUFF, a citizen of the United States, residing at Detroit, Wayne county, Michigan, have invented certain new and useful Improvements in Transmission-Shafts for Motor-Vehicles, of which the following is a specification.

This invention relates primarily to transmission shafts for motor vehicles, and it consists in various improvements in the universal joints for said shafts and bearings, casings and lubricating devices therefor.

Certain features of the invention are applicable to universal joints and transmission shafts generally, while others are particularly useful in motor vehicles, and it is to be understood that the invention is claimed for any uses for which it may be applicable.

The invention will be described in connection with the accompanying drawing in which—

Figure 1 is a sectional view of a portion of a transmission shaft, universal joint and related parts; Fig. 2 is a section on the line A A of Fig. 1; and Fig. 3 is a side view of one of the coupling members, and also a sectional view through the conical flange of the casing.

Referring to the drawing, 1 and 2 indicate two members or sections of a transmission shaft which are connected by a universal joint *a*. When used upon an automobile, for which the invention is primarily intended, the shaft section 1 is the driving section, connected to the clutch mechanism and the section 2 is the driven section, which is connected to the differential gear mechanism. The driving section 1 is supported, adjacent to the universal joint, in a bearing *b* arranged upon one side of a bracket or hanger *c* which latter is suspended from a cross bar 3 of the vehicle frame, as shown in Fig. 1. The bracket has on one side a flat face 4 against which one end of a cylindrical sheet metal casing *d* is secured by means of a clamping ring 5 which surrounds an annular flange 6 on said face and grips the end portion 7 of the sheet metal casing, as shown in Fig. 1. The clamping ring is suitably held in place by bolts 8. The shaft section 1 extends through an opening in the hanger, and a sleeve 10, fixed to the shaft, carries a ball race-way 11 which is opposed to a race-way 12 arranged within a hub 13, the latter being integral with the bracket *c* and arranged at the opposite side thereof from the sheet metal casing *d*. Balls 14 are arranged between the race-ways, and a retaining ring 15 is threaded into the outer end of the hub as shown. A suitable packing 15^a is arranged within an annular recess 16 in the inner edge of the retaining ring and this packing bears against the sleeve 10 so as to exclude dust from the bearing and to prevent the escape of oil. One or more openings 17 extend through the bracket adjacent to the shaft, for the purpose of permitting oil to pass from the interior of the sheet metal casing *d*, through the bracket to the space between the race-ways 11 and 12 of the bearing.

The universal joint *a* comprises a forked member *a'*, which is keyed to the shaft section 1 and has trunnions 18 projecting into bearings in a ring 19, and a member a^2 having a head 21 provided with trunnions 22 which fit into bearings arranged in the ring 19 at right angles to the trunnions 18. The joint is of usual construction except that in the member a^2 recesses 23 are provided between the shank and the head in line with the trunnions 22, for a purpose hereinafter described. In the drawing the shank 24 joins the head at some distance beyond the axial line of the trunnions.

The cylindrical sheet metal casing *d*, which, as before explained, is secured to the face of the hanger or bracket *c* by means of the clamping ring 5, projects outwardly far enough from said bracket to completely surround the universal joint, and it has a head 25 provided with a central opening through which the shank 24 of the coupling, which forms a continuation of the shaft member 2, extends. As shown in the drawing the central portion of the head is turned inwardly, forming a conical flange 26 which surrounds the shank 24 of the coupling and extends into the recesses 23 between the shank and the head 21. The inner end of this flange preferably extends to or slightly beyond the axial line of the trunnions, where its open end can be brought close to that part of the shank 24 which has the least rocking movement. As the internal flange 26 tapers inwardly from the head 25 to its open end 27, a flaring opening 28

is thus provided within which the shank 24 of the coupling is free to move in adjusting itself with relation to the shaft member 1. The casing also has an external or outwardly projecting annular flange 29, which is suitably secured to the head 25 and concentric with the internal flange or cone 26. Upon the shaft member 2 is arranged a collar 30 which fits the shaft closely, but is free to slide lengthwise thereon and the shaft may turn freely within the collar. A flexible shield or covering 31, made of leather or other suitable fabric is secured to the flange 29 and to the collar 30 by suitable means such as the wires 32, this shield inclosing the space between the casing and the collar so as to exclude dust and retain the lubricant.

The casing is provided with a suitable inlet 33 for the admission of oil and with a suitable drainage outlet 34, the inlet and outlet being provided with suitable caps or closures.

In operation, a suitable quantity of lubricant L is placed within the casing, and the coupling ring and trunnions dip into the oil. The rotation of the shaft causes the coupling to spatter the oil about within the casing and in this way a sufficient quantity of oil is passed through the openings 17, to keep the bearing *b* constantly lubricated. As the open end of the internal flange 26 is at the central portion of the coupling and close to the shank 24, while the oil, owing to centrifugal force, is constantly thrown away from the center by the coupling, it will be seen that very little of the oil will pass through the opening 27. As the casing is stationary, it is necessary to journal the collar 30 on the shaft. This collar and the shield 31 prevent dust from entering the casing, at one end, and also prevent the escape of oil, and the retaining ring, 15, prevents dust from passing through the bearing *b* and into the casing, and it also prevents the escape of oil.

What I claim is:

1. The combination with two shaft members and a universal joint connecting said members, of a stationary casing surrounding said joint and having an open end for one of said shaft members to extend through, a collar closely journaled upon said latter shaft member, and a flexible shield extending between the open end of said casing and said collar.

2. The combination with two shaft members and a universal joint connecting said members, of a stationary casing surrounding said joint and having an open end for one of said shaft members to extend through, said casing having an outwardly projecting annular flange at its open end, a collar closely journaled on said latter shaft member, and a flexible shield secured to said annular flange and to said collar.

3. The combination with two shaft members and a universal joint connecting said members, of a casing surrounding said joint and having an open end for one of said shaft members to extend through, said casing having an annular flange projecting inwardly from said end toward the central portion of said joint.

4. The combination with two shaft members and a universal joint connecting said members, of a casing surrounding said joint and having an open end for one of said shaft members to extend through, said casing having a conical flange projecting inwardly from said end toward the central portion of said joint.

5. The combination with a universal joint comprising a forked member having trunnions, a member having a head provided with trunnions said latter member having recesses between its trunnions and its shank, and means connecting the trunnions of said members, of a stationary casing surrounding said coupling and having an open end and having an annular flange extending from said open end into said recesses.

6. The combination with a universal joint comprising a forked member having trunnions, a member having a head provided with trunnions, said latter member having recesses between its trunnions and its shank, and means connecting the trunnions of said members, of a stationary casing surrounding said coupling and having an open end and having an inwardly tapering annular flange extending from said open end into said recesses.

7. The combination with two shaft members and a universal joint coupling connecting said members, of a bracket having a bearing for one of said members, said bearing being closed at one side of the bracket and open at the side next to the coupling, and a casing having one end secured to the bracket and surrounding the coupling and having a head at its opposite end provided with an opening for the other of said shaft members to extend through.

8. The combination with two shaft members and a universal joint connecting said members, of a flat, stationary bracket having an opening for one of said members to extend through and having a bearing for said latter member, said bearing being closed at one end and said bracket having one or more openings for admission of oil to the other end of the bearing, a cylindrical casing having one end secured to the face of the bracket and having a head provided with an opening through which the other of said shaft members extends, and a flexible shield connected to said casing and extending around said last mentioned member.

9. The combination of a supporting bracket having a bearing therein, a trans-

mission shaft comprising two members and a universal joint connecting said members, one of said members being journaled in said bearing, a sheet metal casing secured to said bracket and extending around the coupling, said casing having an opening through which one of said members extends, a collar journaled on said latter member, and a flexible shield secured to said casing and to said collar.

10. The combination with a frame and a bracket supported on said frame, of a bearing in said bracket, a shaft member rotating in the bearing, a second shaft member, a universal joint connecting said shaft members, a fixed casing supported by said bracket and surrounding the universal joint, said casing having an opening through which one of said shaft members extends, and a flexible shield arranged to close the opening between the shaft member and the casing.

11. The combination with a fixed support, of a shaft member having a bearing in said support, a second shaft member, a universal joint connecting said shaft members, and a fixed casing surrounding said joint, the said casing having an inturned annular flange extending substantially to a plane passing through the center of said joint.

12. The combination with a fixed support, of a shaft member having a bearing in said support, a second shaft member, a universal joint connecting said shaft members, and a fixed casing surrounding said joint, the said casing having a tapered inturned flange extending substantially to a plane passing through the center of said joint.

13. The combination with a support, of a shaft having a bearing therein, a second shaft, a universal joint connecting said shafts, a casing inclosing said joint and secured to said support, said casing having an opening opposite said bearing through which said second shaft passes out of contact with the casing, a collar journaled upon said second shaft, and a flexible shield secured to said casing and to said collar.

In testimony whereof I affix my signature in presence of two witnesses.

RUSSELL HUFF.

Witnesses:

MILTON TIBBETTS,

CLARA I. DALE.

R. HUFF.

MOTOR VEHICLE.

APPLICATION FILED MAY 27, 1907.

1,019,254.

Patented Mar. 5, 1912.

2 SHEETS—SHEET 1.

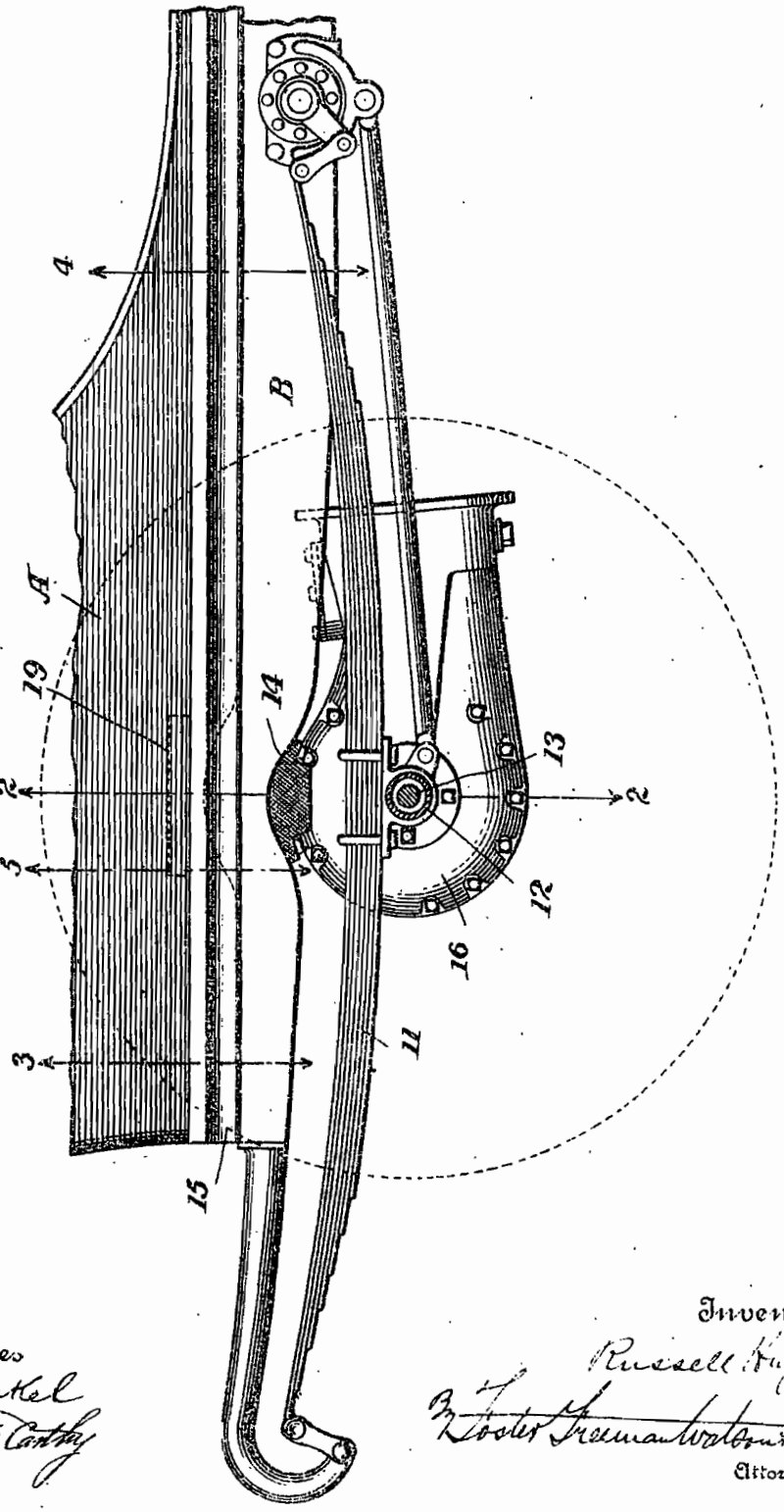

Fig. 1.

Witnesses

J. G. Stinkel

J. J. McCarthy

Inventor

Russell Huff

By Foster Freeman Watson & Coit

Attorneys

R. HUFF.

MOTOR VEHICLE.

APPLICATION FILED MAY 27, 1907.

1,019,254. Patented Mar. 5, 1912

2 SHEETS—SHEET 2.

Fig. 2

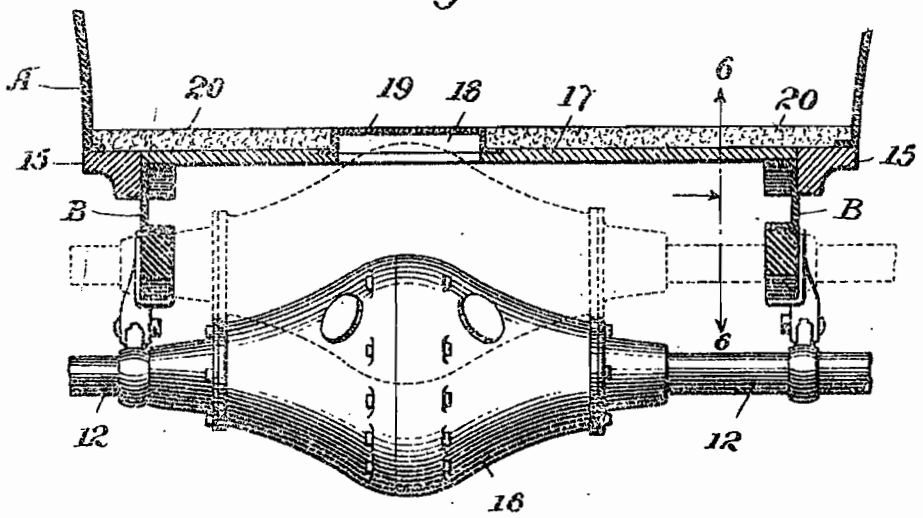

Fig. 3.

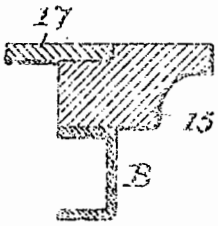

Fig. 5.

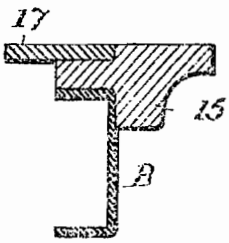

Fig. 4.

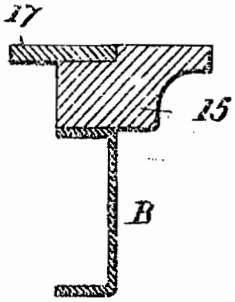

Fig. 6.

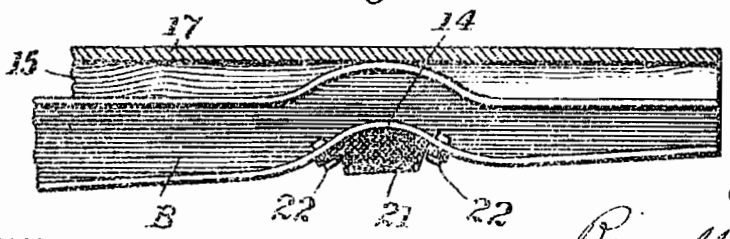

Witnesses

J. G. Linkel

J. J. McCarthy

Inventor

Russell Huff

By Foster Freeman Watson & Coe

Attorneys

UNITED STATES PATENT OFFICE.

RUSSELL HUFF, OF DETROIT, MICHIGAN, ASSIGNOR, BY MESNE ASSIGNMENTS, TO PACKARD MOTOR CAR COMPANY, OF DETROIT, MICHIGAN, A CORPORATION OF MICHIGAN.

MOTOR-VEHICLE.

1,019,254. Specification of Letters Patent. Patented Mar. 5, 1912.

Application filed May 27, 1907. Serial No. 375,962.

To all whom it may concern:

Be it known that I, RUSSELL HUFF, a citizen of the United States, and resident of Detroit, Wayne county, State of Michigan, have invented certain new and useful Improvements in Motor-Vehicles, of which the following is a specification.

This invention relates more particularly to improvements in the construction of the frame and body of the motor vehicle, the object being to permit greater range of movement of the body on its springs with respect to the rear axle.

The invention will be described in connection with the accompanying drawing, in which,

Figure 1 is a side view partly in section of a portion of the rear end of a motor vehicle; Fig. 2 is a section on the line 2—2 of Fig. 1; Figs. 3, 4 and 5 are respectively sections on the lines 3—3, 4—4 and 5—5 of Fig. 1; Fig. 6 is a section on the line 6—6 of Fig. 2 looking in the direction of the arrow.

Referring to the drawing A indicates the body of a motor vehicle and B the steel frame upon which the body rests. The frame B is preferably of channel-section with the flanges turned to the inside as shown in the sectional views, Figs. 2 to 5 inclusive.

The rear part of the vehicle rests upon springs 11 of any suitable construction, which springs are supported upon the fixed casings 12 of the axles within which the power-transmitting axles 13 rotate.

The object of the present invention is to provide for greater amplitude of movement of the body upon its springs without impairment of the lines of the body. I attain this object by off-setting the frame upwardly at a point 14 over the axle, the upper and lower lines of the frame at the off-set portion being reversely curved as shown in Figs. 1 and 6 of the drawing. The upper lines of the frame forwardly and rearwardly of the off-set are preferably in line with each other.

Resting upon the frame are the sills 15, which sills project outwardly from the frame and have straight upper and lower surfaces. The sills are cut away to conform the upper surface of the off-set portions of the side bars of the frame, that is, these off-set portions are let into the inner portion of the sills, the straight lines of the outer portion being preserved. Figs. 3 and 4 show the sills resting upon the side bars of the frame in the rear and front of the off-set portion, while Fig. 5 shows the manner of letting the off-set portions into the sills. It will be observed that the frame is thus off-set without in any way disfiguring or complicating the construction of the body.

The axle casings 12 are connected to an intermediate gear casing 16 of much larger diameter. To prevent the floor 17 of the body from striking the gear casing upon extreme compression of the springs, I preferably leave an opening 18 in the floor and provide a raised flanged cover 19 for the same, which cover may be of cast aluminum. The height of this cover is preferably equal to the thickness of the mats 20 with which the floor of the vehicle is usually provided.

In some cases it is desirable to protect the frame and the axle casings by a bumper of rubber or other elastic material and in such cases I provide a bumper 21 adapted to fit the recess in the under side of the metal frame, as shown in Fig. 6, the bumper being connected to the lower flange of the frame by suitable fastenings 22. The upper surface of the bumper is preferably made to conform to the contour of the frame at the recess and the body of the bumper is located substantially within the recess which forms what may be termed a socket for it, tending to prevent it from spreading when compressed.

Having described the invention what is claimed and desired to be secured by Letters-Patent is,

1. In a motor vehicle, the combination with the axle and springs, of a metal frame, the side bars of which are offset upwardly immediately over the axle, and sills supported on said metal frame, said sills being recessed to receive the off-set portions of the frame.

2. In a motor vehicle, the combination with the rear axle and springs supported thereon, of a metal frame of channel-section supported on said springs, the said frame being off-set upwardly immediately over the axle and the upper flanges of the frame in front and rear of said off-set portion being in the same plane, and sills resting upon

said frame, the inner portions of said sills being recessed to receive the off-set portions of the frame.

3. In a motor vehicle, the combination with the gear case and the rear axle casings, of the springs supported on said casings, a metal frame supported on said springs and having off-set portions over the axle casings, the sills supported on said metal frame and recessed to receive the off-set portions thereof, and the floor having an opening above the gear case, and a suitable raised cover for said opening.

4. In a motor vehicle, the combination with the axle and springs, of a metal frame, the side bars of which are off-set upwardly immediately over the axle, and sills supported on said metal frame, said sills being recessed to receive the off-set portions of the frame, the outside lines of said sills being straight at the off-set portions of the frame.

5. In a motor vehicle, the combination with the axle and springs, of a metal frame, the side bars of which are off-set upwardly immediately over the axle, and sills supported on said metal frame, said sills being recessed to receive the off-set portions of the frame, the lower surfaces of said sills outside of the side bars being substantially straight and horizontal.

6. In a motor-vehicle, the combination with the axle and springs, of a metal frame the side members of which are offset upwardly immediately over the axle, and sills supported by said metal frame, the lower lines of said sills being substantially straight and horizontal.

7. In a motor-vehicle, the combination with the axle and springs, of a metal frame the side members of which are offset upwardly immediately over the axle, and sills supported by said metal frame, said sills being recessed to receive the offset portions of the frame, the lower lines of said sills on one side of said side members being substantially straight and horizontal.

8. In a motor vehicle, the combination with the axle and springs, of a frame supported on the springs, said frame having arched recesses in the underside thereof directly over the axle, and flexible bumpers secured in said recesses and fitting the contour of the frame.

9. In a motor vehicle, the combination with the axle and springs, of a flanged frame having upper and lower flanges supported on the springs, said frame being upwardly off-set forming curved recesses in the underside thereof directly over the axle, flexible bumpers fitting said recesses, and means securing said bumpers to the lower flange of the frame.

10. In a motor vehicle, the combination with the axle and springs, of a frame supported on the springs, said frame being upwardly off-set forming recesses of curved contour in the underside of the frame directly over the axle, and flexible bumpers in said recesses, the upper surfaces of said bumpers being constructed to conform to the contour of the frame.

In testimony whereof I affix my signature in presence of two witnesses.

RUSSELL HUFF.

Witnesses:
L. C. TENNEY,
ALLEN LOOMIS.

R. HUFF.

GASOLENE TANK FOR MOTOR VEHICLES.

APPLICATION FILED AUG. 26, 1907.

942,907. Patented Dec. 14, 1909.

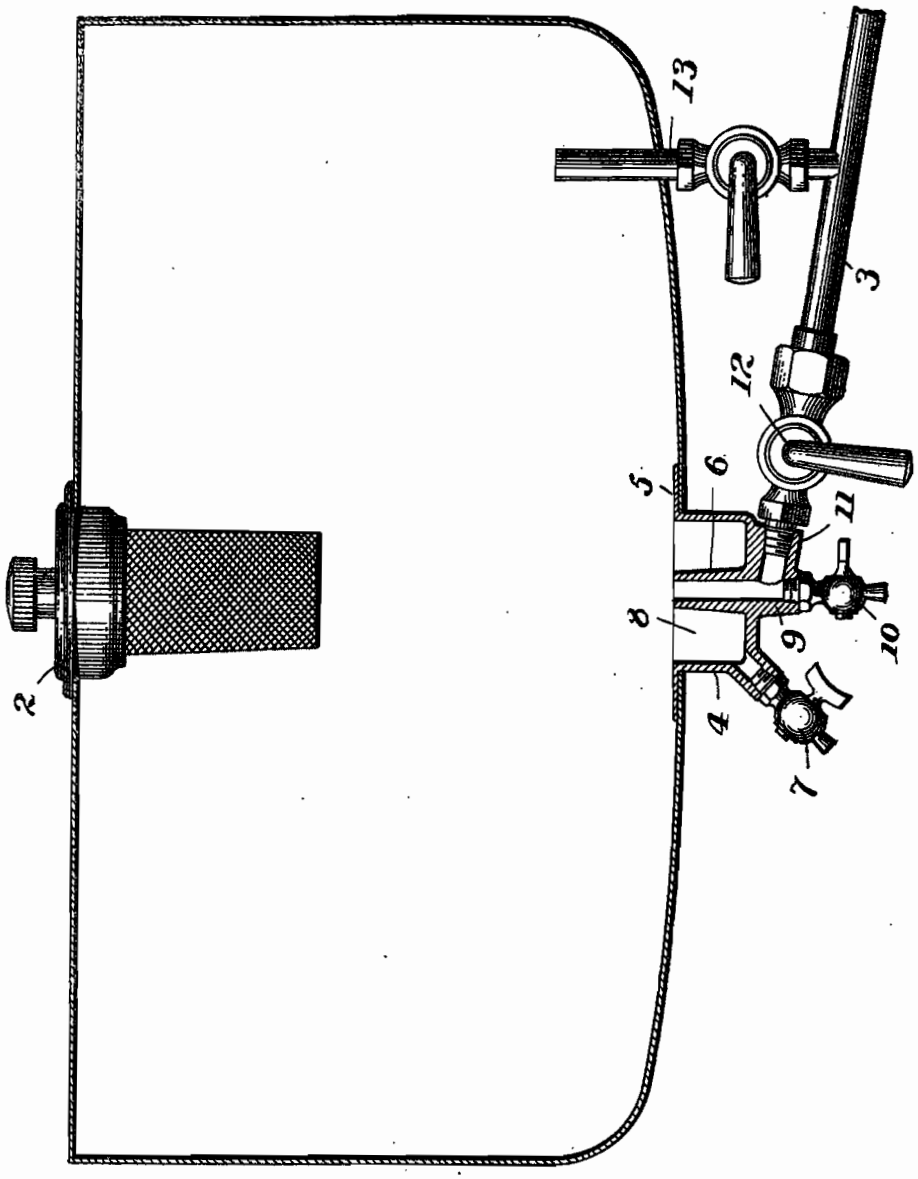

Witnesses
J. G. Stinkel
Milton Tibbetts

Inventor
Russell Huff
By Foster Freeman Watson & Coit
Attorneys

UNITED STATES PATENT OFFICE.

RUSSELL HUFF, OF DETROIT, MICHIGAN, ASSIGNOR, BY MESNE ASSIGNMENTS, TO PACKARD MOTOR CAR COMPANY, OF DETROIT, MICHIGAN, A CORPORATION OF MICHIGAN.

GASOLENE-TANK FOR MOTOR-VEHICLES.

942,907. Specification of Letters Patent. Patented Dec. 14, 1909.

Application filed August 26, 1907. Serial No. 390,224.

To all whom it may concern:

Be it known that I, RUSSELL HUFF, a citizen of the United States, and residing at Detroit, Wayne county, Michigan, have invented certain new and useful Improvements in Gasolene-Tanks for Motor-Vehicles, of which the following is a specification.

My invention relates to supply tanks in which means is provided for separating the liquid contained therein from heavy sediment and foreign matter, which may be mixed therewith, and in thus preventing the sediment and foreign matter from passing through the outlet to the place of use. It is particularly applicable to gasolene tanks for use on motor vehicles.

It consists in a cup-shaped sediment collector placed in the bottom part of the tank and having an outlet tube extending up through this sediment collector, but not above the bottom of the tank.

It also consists in the details of construction whereby the sediment collector is made of a convenient and efficient form and is attachable to any oil tank.

The single view in the drawing shows the tank and sediment collector in cross section.

As shown in the drawing, the ordinary gasolene tank 1 of a motor vehicle is provided with a filling cap 2 and an outlet pipe 3 leading to a carbureter, not shown. At the lowest point in the bottom of the tank is shown a cup-shaped collector 4 which, in this instance, is provided with the flange 5 at the top, which may be connected to the tank 1 in any suitable manner. Extending up through the center of the bottom of this cup-shaped collector is the outlet tube, the upper and lower parts of which are marked, respectively, 6 and 9. In the preferred form shown, these parts are made integral with the cup-shaped collector 4 and the upper end of the part 6 is on the same plane as the top of the side walls of the collector, and is thus flush with the bottom of the tank. I have shown the lower part 9 as provided with the screw-threaded sockets to receive the drain cock 10, and the screw-threaded end 11 of the outlet pipe 3. The casting forming the cup-shaped collector is furthermore provided at its bottom with a screw-threaded projection which receives the drain cock 7. It will be noted that the cup-shaped casting and the central tube 6 together form an annular depression 8, which is below the lowest point of the bottom of the tank, and it is obvious that any foreign matter heavier than the liquid in the tank will sink to the bottom, thus entering this annular depression without reaching and passing through the outlet tube 6. The outlet tube 3 is provided with the controlling valve 12, and I have shown connected with this outlet tube beyond the valve 12 an outlet pipe 13 which passes up through the bottom of the supply tank 1, and terminates a short distance above the bottom. This outlet 13 terminating above the bottom is one which is sometimes used on the gasolene tanks of motor vehicles for the purpose of having in the tank a reserve supply of oil. This reserved supply may ordinarily be drawn off by a pipe entering the lowest part of the tank, and the purpose of having the main outlet 13 terminate above the bottom is to give notice to the operator that his supply is nearly exhausted.

My improved sediment collector may be used in connection with an outlet pipe like 13, terminating above the bottom, or that pipe may be omitted and my improvement used alone.

As shown in the drawing I prefer to make the sediment collecting cup-shaped attachment as a single casting including the cup-shaped part, top flanges, central tube and bushings, but this is of course not essential. Being a separate article, my sediment collector may be conveniently attached or applied to any ordinary supply tank, and it will, however applied, collect the sediment and prevent the passage of heavy foreign matter through the outlet.

What I claim is:

1. A sediment collector comprising a cup-shaped attachment having means at its top for securing it to a vessel, a central tube therein, the upper open end of which is above the bottom and does not extend above the top walls, means for connecting an outlet pipe with the lower end of the central tube, a drain cock in the bottom of the cup-shaped attachment, and a drain cock in the bottom of said tube.

2. A sediment collector comprising a cup-shaped attachment in one piece having a flange at its top, a central tubular portion projecting upwardly from the bottom and not extending above the top, the said tubu-

lar portion being open at its lower end, a lateral opening near the bottom of said tubular portion adapted to be connected with an outlet pipe, and a screw-threaded drain opening in the bottom of said cup-shaped attachment.

3. A sediment collector comprising a cup-shaped attachment having a flange around its top, a central tube therein, the upper open end of which is on the same plane as the top walls of the attachment, means for connecting an outlet pipe with the lower end of the central tube, and a drain cock in the bottom of the cup-shaped attachment.

4. A sediment collector comprising a cup-shaped attachment having a flange around its top, a central tube therein the upper open end of which is on the same plane as the top walls of the attachment, means for connecting an outlet pipe with the lower end of the central tube, a drain cock in the bottom of the cup-shaped attachment, and a drain cock in the bottom of said tube.

5. A sediment collector comprising a cup-shaped attachment having a flange around its top, a central tube therein, the upper open end of which is in substantially the same plane as the top of the attachment, means for connecting an outlet pipe with the lower end of the central tube, and a drain cock in the bottom of the cup-shaped attachment.

In testimony whereof I affix my signature in presence of two witnesses.

RUSSELL HUFF.

Witnesses:

MILTON TIBBETTS,

CLARA I. DALE.

No. 887,094. PATENTED MAY 12, 1908.

R. HUFF.

MOTOR VEHICLE.

APPLICATION FILED AUG. 21, 1907.

2 SHEETS—SHEET 1.

Fig. 1.

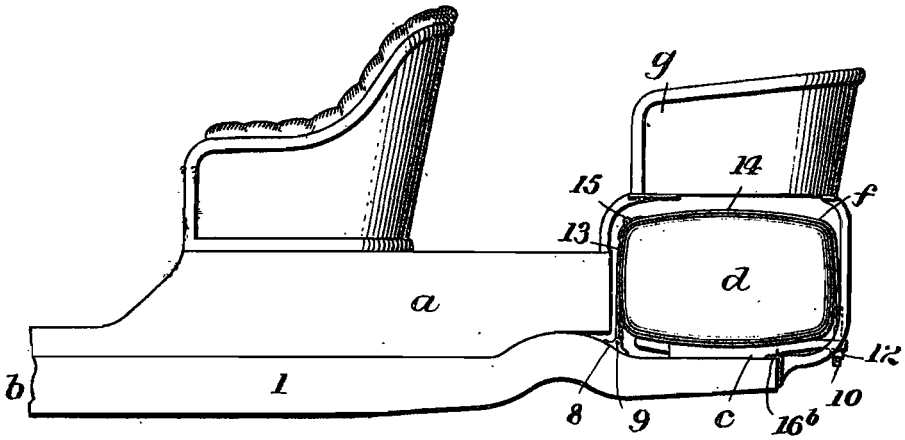

Fig. 2.

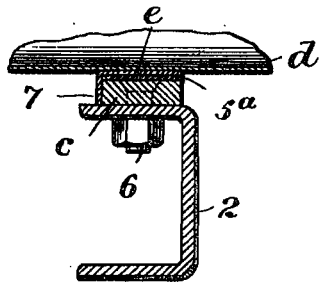

Fig. 3.

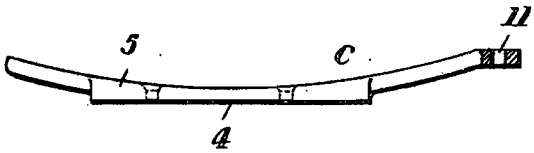

Witnesses

J. G. Stinkel

Milton Tibbetts

Inventor

Russell Huff

By Foster Freeman Watson & Coit

Attorneys

No. 887,094. PATENTED MAY 12, 1908.

R. HUFF.

MOTOR VEHICLE.

APPLICATION FILED AUG. 21, 1907.

2 SHEETS—SHEET 2.

Fig. 4.

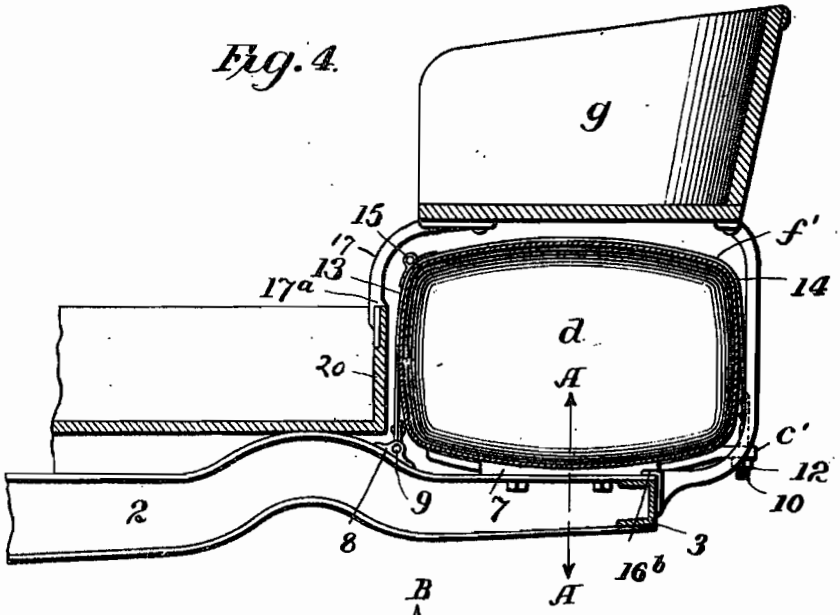

Fig. 5.

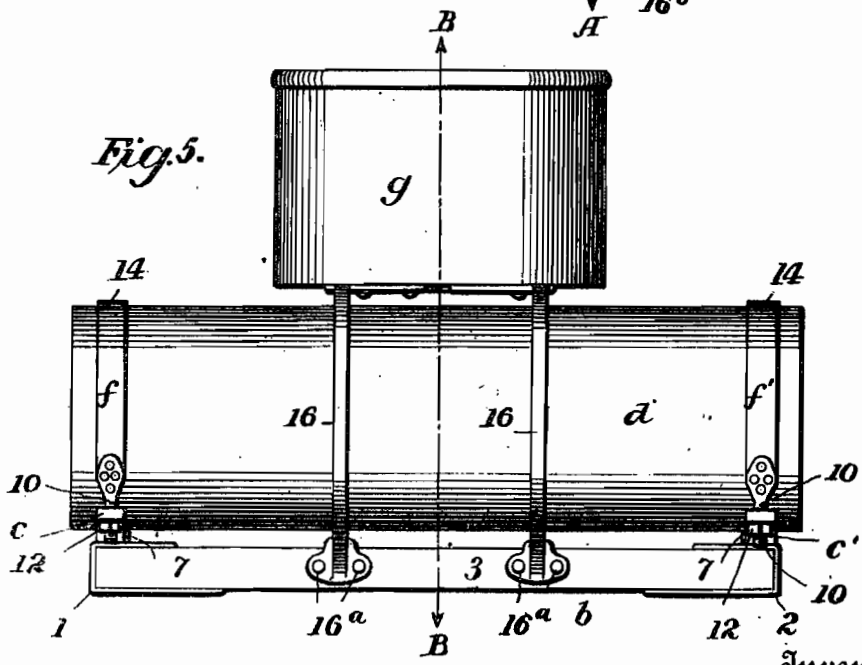

Witnesses

J. G. Hinkel

Milton Tibbetts

Inventor

Russell Huff

By Foster Freeman Watson & Coit

Attorneys

UNITED STATES PATENT OFFICE.

RUSSELL HUFF, OF DETROIT, MICHIGAN, ASSIGNOR TO PACKARD MOTOR CAR COMPANY, DETROIT, MICHIGAN, A CORPORATION OF WEST VIRGINIA.

MOTOR-VEHICLE.

No. 887,094. Specification of Letters Patent. Patented May 12, 1908.

Application filed August 21, 1907. Serial No. 389,561.

To all whom it may concern:

Be it known that I, RUSSELL HUFF, a citizen of the United States, and resident of Detroit, Wayne county, Michigan, have invented certain new and useful Improvements in Motor-Vehicles, of which the following is a specification.

This invention relates to improvements in means for supporting and securing fuel tanks upon motor vehicles, and also to certain features of construction the details of which will be hereinafter pointed out.

In the accompanying drawing, Figure 1 is a side elevation of a portion of the frame and body of a motor vehicle, with the fuel tank in position beneath the rear seat; Fig. 2 is a section on the line A A of Fig. 4; Fig. 3 is a side view of one of the tank supports; Fig. 4 is a section on the line B B of Fig. 5, and Fig. 5 is a rear view of the frame, tank and rear seat.

Referring to the drawing *a* indicates the body of the vehicle and *b* indicates the vehicle frame, which latter comprises the side channel-bars 1 and 2, extending to the rear of the vehicle body, and the cross bar 3 which connects the ends of the side bars. Upon the side bars 1 and 2, at the rear of the vehicle body, are arranged tank supports or saddles *c* and *c'*, respectively. The supports are preferably of the form shown most clearly in Figs. 2 and 3 and each support consists of a metal bar having a flattened surface 4 on its lower side adapted to fit against the side bar of the vehicle frame and having a concave upper surface 5 which forms a seat for the fuel tank *d*. The upper surfaces of the supports are preferably covered with leather, or other suitable material for deadening sound and preventing wear, this covering being indicated at 5^a in Fig. 2. The supports are secured to the side bars by bolts 6, the heads of which are counter-sunk in the supports as indicated in dotted lines, Fig. 2. The tank *d*, as shown, is somewhat longer than the width of the vehicle frame and, in cross section, it is preferably of the form shown in Fig. 4, the top, bottom and sides being somewhat convex, the bottom having the same curvature as the upper surfaces of the supports. As shown in Fig. 5, the end portions of the tank rest upon the supports, and in order to provide bearing surfaces on the tank and to prevent endwise movement of the tank, metal strips *e* are arranged transversely upon the bottom of the tank and suitably secured thereto by soldering or otherwise, these strips having downwardly turned flanges 7 which fit against the inner or adjacent sides of the supports and thus prevent endwise movement of the tank.

In order to secure the tank firmly against its seats on the supports, metal straps *f* and *f'*, preferably covered with leather, are provided. The straps are alike in construction and similarly arranged and secured. Immediately at the rear of the vehicle body, upon each side bar, is secured a bracket 8 which carries a cross pin 9, to which one end of the strap is loosely secured. The strap extends over the top of the tank, and a threaded bar or bolt 10, secured to its opposite end, extends through an opening 11 in the rear end of the tank support. By means of the nuts 12 upon the threaded extensions of the straps the straps may be tightened so as to hold the tank firmly in position against the supports. Each strap is made in two parts, 13 and 14 and these parts are connected by a hinge 15 which is located at the top of the forward side of the tank. The purpose of this hinged construction is to enable the tank to be removed and inserted without entirely removing the straps or bending them out of shape. As the upright parts 13 of the straps are arranged between the tank and the body of the vehicle, it will be seen that if the straps were continuous they would either have to be bent out of shape or removed, in order to insert the tank, whereas, by making each strap in two parts and hinging the parts together at the top of the upright portion 13, the part 14 may be loosened from the tank support and moved upwardly out of the way of the tank.

The rear seat *g*, commonly known as the tiger seat, is arranged directly over the tank upon two standards 16, connected to the rear portion of the seat and to the bar 3 of the vehicle frame, and upon a standard 17, secured centrally to the front portion of the seat and to the body of the vehicle. These standards, or brackets, are curved, as shown, so as to clear the front and rear sides of the tank and leave an unobstructed space beneath the tiger seat for the accommodation of the tank. The brackets 16 are secured by bolts 16^a to the bar 3 of the frame and they are provided with lips or flanges 16^b which rest upon the end bar and relieve the bolts of vertical pressure. In the same way, and for

the same purpose, the bracket 17 is provided with a lip or flange 17[a] which rests upon the rear cross board 20 of the vehicle body.

What I claim is,—

1. The combination with a motor vehicle frame, of a fuel tank arranged transversely on the rear end portion thereof, and one or more metal straps for securing said tank, each strap comprising two parts, hinged together, one of said parts extending over the tank and downwardly on one side thereof, and the other part extending downwardly on the opposite side of the tank, the ends of the strap being suitably connected to the frame.

2. The combination with a motor vehicle frame, of a fuel tank arranged transversely on the rear end portion thereof, and one or more metal straps for securing said tank, each strap comprising two parts, hinged together, one of said parts extending over the tank and downwardly on one side thereof, and the other part extending downwardly on the opposite side of the tank, one end of the strap being permanently connected to the frame and the other end being detachably connected thereto.

3. The combination with a motor vehicle frame, of a fuel tank arranged transversely on the rear end portion thereof, and one or more metal straps for securing said tank, each strap comprising two parts, hinged together, one of said parts extending over the tank and downwardly on the rear side thereof, and having its end detachably connected to the frame, and the other part extending downwardly on the front side of the tank and having its end connected to the frame.

4. The combination with a motor vehicle frame, of a fuel tank supported thereon at the rear of the vehicle body and extending crosswise of the frame and metal straps for securing said tank, each strap comprising a part secured to a side bar of the frame and extending upwardly at the front side of a tank, and a part extending over the tank and downwardly on the rear side thereof, said latter part having a bolt at its end for connection to the frame, the parts of said strap being connected by a hinge joint located at the top of the front side of the tank.

5. In a motor vehicle, a pair of saddles or supports arranged upon the side bars of the frame at the rear of the vehicle body, a tank having its end portions resting upon said saddles, and a pair of metal straps for securing said tank, each strap having one end secured to a side bar of the frame in front of the tank, and having its other end detachably connected to the rear end of one of said saddles.

6. In a motor vehicle, a pair of saddles or supports arranged upon the side bars of the frame at the rear of the vehicle body, a tank having its end portions resting upon said saddles, and a pair of metal straps for securing said tank, each strap having one end secured to a side bar of the frame in front of the tank, and having its other end detachably connected to the rear end of one of said saddles, each strap comprising two parts hinged together at the top of the forward side of the tank.

7. The combination with a motor vehicle frame, of saddles or supports arranged upon said frame at the rear of the vehicle body, an oblong fuel tank arranged transversely of the frame upon said supports, means for preventing endwise movement of the tank, and straps adapted to extend over the end portions of the tank, and hold the latter against its supports.

8. The combination with a motor vehicle frame, of saddles or supports arranged upon said frame at the rear of the vehicle body, an oblong fuel tank arranged transversely of the frame upon said supports, said tank having depending flanges connected thereto for engaging the sides of the supports, and one or more straps adapted to extend over the tank and hold the latter against the supports.

9. The combination with a motor vehicle frame, of saddles or supports arranged upon the rear end of said frame, a fuel tank having metal strips on its lower side adapted to rest on said supports, said strips having depending flanges adapted to engage the sides of said supports and prevent movement of the tank transversely of the vehicle, and straps for preventing upward movement of the tank relatively to its supports.

10. The combination with a motor vehicle frame, of saddles or supports arranged lengthwise of the frame at its rear end, the upper surfaces of said supports being concave, a fuel tank having a convex lower surface, adapted to rest on said supports, and straps extending over said tank for preventing upward movement of the tank relatively to its supports.

11. In a motor vehicle an oblong fuel tank arranged transversely of the vehicle frame, and a seat arranged over the central portion of the tank, said seat having a forward leg or bracket secured to the vehicle body, and a pair of legs or brackets extending between the rear end of the frame and the rear portion of the seat.

12. In a motor vehicle, a seat arranged centrally of the vehicle, at its rear end, a fuel tank extending transversely of the vehicle beneath said seat and at the rear of the vehicle body, and straps extending over the ends of said tank, at each side of said seat, each strap having a hinge joint near the top of the forward side of the tank.

In testimony whereof I affix my signature in presence of two witnesses.

RUSSELL HUFF.

Witnesses:

MILTON TIBBETTS,

CLARA I. DALE.

R. HUFF.

TRANSMISSION SHAFT FOR MOTOR VEHICLES.

APPLICATION FILED AUG. 24, 1907.

1,167,695. Patented Jan. 11, 1916.

Fig. 1.

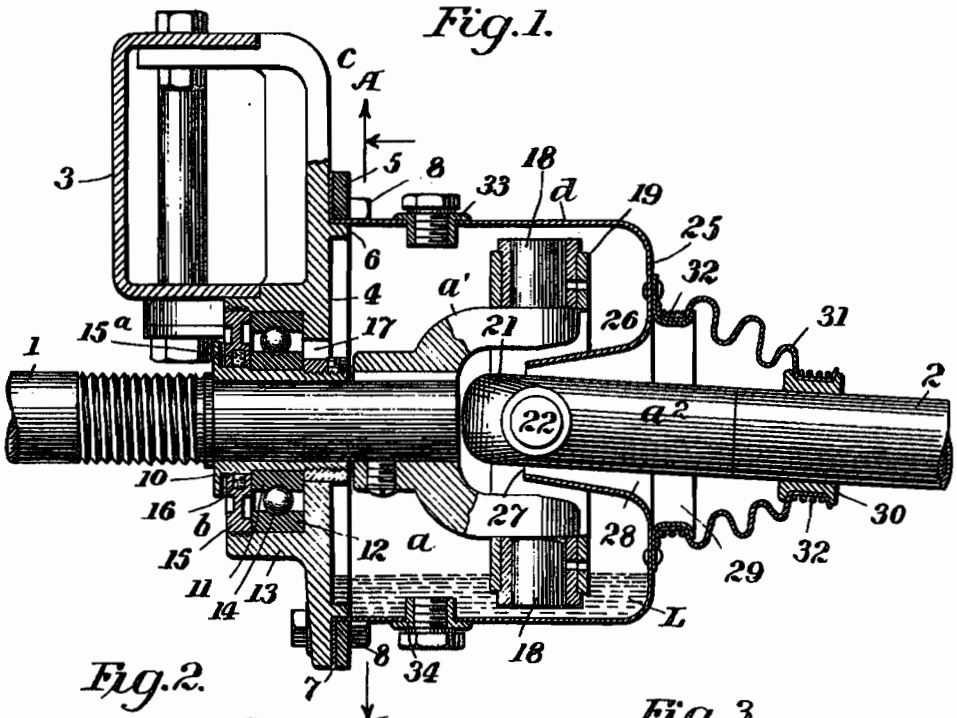

Fig. 2.

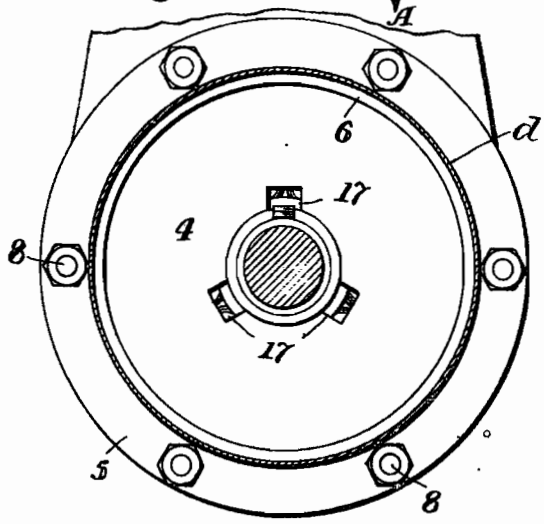

Fig. 3.

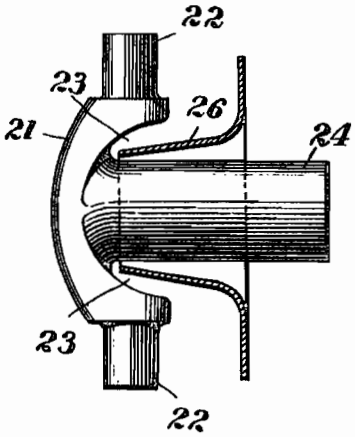

Witnesses
J. E. Finkel
J. J. McCarthy

Inventor
Russell Huff
by Foster Freeman Valentine & Co.
Attorneys

UNITED STATES PATENT OFFICE.

RUSSELL HUFF, OF DETROIT, MICHIGAN, ASSIGNOR, BY MESNE ASSIGNMENTS, TO PACKARD MOTOR CAR COMPANY, OF DETROIT, MICHIGAN, A CORPORATION OF MICHIGAN.

TRANSMISSION-SHAFT FOR MOTOR-VEHICLES.

1,167,695. Specification of Letters Patent. Patented Jan. 11, 1916.

Application filed August 24, 1907. Serial No. 390,021.

To all whom it may concern:

Be it known that I, RUSSELL HUFF, a citizen of the United States, residing at Detroit, Wayne county, Michigan, have invented certain new and useful Improvements in Transmission-Shafts for Motor-Vehicles, of which the following is a specification.

This invention relates primarily to transmission shafts for motor vehicles, and it consists in various improvements in the universal joints for said shafts and bearings, casings and lubricating devices therefor.

Certain features of the invention are applicable to universal joints and transmission shafts generally, while others are particularly useful in motor vehicles, and it is to be understood that the invention is claimed for any uses for which it may be applicable.

The invention will be described in connection with the accompanying drawing in which—

Figure 1 is a sectional view of a portion of a transmission shaft, universal joint and related parts; Fig. 2 is a section on the line A A of Fig. 1; and Fig. 3 is a side view of one of the coupling members, and also a sectional view through the conical flange of the casing.

Referring to the drawing, 1 and 2 indicate two members or sections of a transmission shaft which are connected by a universal joint *a*. When used upon an automobile, for which the invention is primarily intended, the shaft section 1 is the driving section, connected to the clutch mechanism and the section 2 is the driven section, which is connected to the differential gear mechanism. The driving section 1 is supported, adjacent to the universal joint, in a bearing *b* arranged upon one side of a bracket or hanger *c* which latter is suspended from a cross bar 3 of the vehicle frame, as shown in Fig. 1. The bracket has on one side a flat face 4 against which one end of a cylindrical sheet metal casing *d* is secured by means of a clamping ring 5 which surrounds an annular flange 6 on said face and grips the end portion 7 of the sheet metal casing, as shown in Fig. 1. The clamping ring is suitably held in place by bolts 8. The shaft section 1 extends through an opening in the hanger, and a sleeve 10, fixed to the shaft, carries a ball race-way 11 which is opposed to a race-way 12 arranged within a hub 13, the latter being integral with the bracket *c* and arranged at the opposite side thereof from the sheet metal casing *d*. Balls 14 are arranged between the race-ways, and a retaining ring 15 is threaded into the outer end of the hub as shown. A suitable packing 15^a is arranged within an annular recess 16 in the inner edge of the retaining ring and this packing bears against the sleeve 10 so as to exclude dust from the bearing and to prevent the escape of oil. One or more openings 17 extend through the bracket adjacent to the shaft, for the purpose of permitting oil to pass from the interior of the sheet metal casing *d*, through the bracket to the space between the race-ways 11 and 12 of the bearing.

The universal joint *a* comprises a forked member a', which is keyed to the shaft section 1 and has trunnions 18 projecting into bearings in a ring 19, and a member a^2 having a head 21 provided with trunnions 22 which fit into bearings arranged in the ring 19 at right angles to the trunnions 18. The joint is of usual construction except that in the member a^2 recesses 23 are provided between the shank and the head in line with the trunnions 22, for a purpose hereinafter described. In the drawing the shank 24 joins the head at some distance beyond the axial line of the trunnions.

The cylindrical sheet metal casing *d*, which, as before explained, is secured to the face of the hanger or bracket *c* by means of the clamping ring 5, projects outwardly far enough from said bracket to completely surround the universal joint, and it has a head 25 provided with a central opening through which the shank 24 of the coupling, which forms a continuation of the shaft member 2, extends. As shown in the drawing the central portion of the head is turned inwardly, forming a conical flange 26 which surrounds the shank 24 of the coupling and extends into the recesses 23 between the shank and the head 21. The inner end of this flange preferably extends to or slightly beyond the axial line of the trunnions, where its open end can be brought close to that part of the shank 24 which has the least rocking movement. As the internal flange 26 tapers inwardly from the head 25 to its open end 27, a flaring opening 28

is thus provided within which the shank 24 of the coupling is free to move in adjusting itself with relation to the shaft member 1. The casing also has an external or outwardly projecting annular flange 29, which is suitably secured to the head 25 and concentric with the internal flange or cone 26. Upon the shaft member 2 is arranged a collar 30 which fits the shaft closely, but is free to slide lengthwise thereon and the shaft may turn freely within the collar. A flexible shield or covering 31, made of leather or other suitable fabric is secured to the flange 29 and to the collar 30 by suitable means such as the wires 32, this shield inclosing the space between the casing and the collar so as to exclude dust and retain the lubricant.

The casing is provided with a suitable inlet 33 for the admission of oil and with a suitable drainage outlet 34, the inlet and outlet being provided with suitable caps or closures.

In operation, a suitable quantity of lubricant L is placed within the casing, and the coupling ring and trunnions dip into the oil. The rotation of the shaft causes the coupling to spatter the oil about within the casing and in this way a sufficient quantity of oil is passed through the openings 17, to keep the bearing *b* constantly lubricated. As the open end of the internal flange 26 is at the central portion of the coupling and close to the shank 24, while the oil, owing to centrifugal force, is constantly thrown away from the center by the coupling, it will be seen that very little of the oil will pass through the opening 27. As the casing is stationary, it is necessary to journal the collar 30 on the shaft. This collar and the shield 31 prevent dust from entering the casing, at one end, and also prevent the escape of oil, and the retaining ring, 15, prevents dust from passing through the bearing *b* and into the casing, and it also prevents the escape of oil.

What I claim is:

1. The combination with two shaft members and a universal joint connecting said members, of a stationary casing surrounding said joint and having an open end for one of said shaft members to extend through, a collar closely journaled upon said latter shaft member, and a flexible shield extending between the open end of said casing and said collar.

2. The combination with two shaft members and a universal joint connecting said members, of a stationary casing surrounding said joint and having an open end for one of said shaft members to extend through, said casing having an outwardly projecting annular flange at its open end, a collar closely journaled on said latter shaft member, and a flexible shield secured to said annular flange and to said collar.

3. The combination with two shaft members and a universal joint connecting said members, of a casing surrounding said joint and having an open end for one of said shaft members to extend through, said casing having an annular flange projecting inwardly from said end toward the central portion of said joint.

4. The combination with two shaft members and a universal joint connecting said members, of a casing surrounding said joint and having an open end for one of said shaft members to extend through, said casing having a conical flange projecting inwardly from said end toward the central portion of said joint.

5. The combination with a universal joint comprising a forked member having trunnions, a member having a head provided with trunnions said latter member having recesses between its trunnions and its shank, and means connecting the trunnions of said members, of a stationary casing surrounding said coupling and having an open end and having an annular flange extending from said open end into said recesses.

6. The combination with a universal joint comprising a forked member having trunnions, a member having a head provided with trunnions, said latter member having recesses between its trunnions and its shank, and means connecting the trunnions of said members, of a stationary casing surrounding said coupling and having an open end and having an inwardly tapering annular flange extending from said open end into said recesses.

7. The combination with two shaft members and a universal joint coupling connecting said members, of a bracket having a bearing for one of said members, said bearing being closed at one side of the bracket and open at the side next to the coupling, and a casing having one end secured to the bracket and surrounding the coupling and having a head at its opposite end provided with an opening for the other of said shaft members to extend through.

8. The combination with two shaft members and a universal joint connecting said members, of a flat, stationary bracket having an opening for one of said members to extend through and having a bearing for said latter member, said bearing being closed at one end and said bracket having one or more openings for admission of oil to the other end of the bearing, a cylindrical casing having one end secured to the face of the bracket and having a head provided with an opening through which the other of said shaft members extends, and a flexible shield connected to said casing and extending around said last mentioned member.

9. The combination of a supporting bracket having a bearing therein, a trans-

mission shaft comprising two members and a universal joint connecting said members, one of said members being journaled in said bearing, a sheet metal casing secured to said bracket and extending around the coupling, said casing having an opening through which one of said members extends, a collar journaled on said latter member, and a flexible shield secured to said casing and to said collar.

10. The combination with a frame and a bracket supported on said frame, of a bearing in said bracket, a shaft member rotating in the bearing, a second shaft member, a universal joint connecting said shaft members, a fixed casing supported by said bracket and surrounding the universal joint, said casing having an opening through which one of said shaft members extends, and a flexible shield arranged to close the opening between the shaft member and the casing.

11. The combination with a fixed support, of a shaft member having a bearing in said support, a second shaft member, a universal joint connecting said shaft members, and a fixed casing surrounding said joint, the said casing having an inturned annular flange extending substantially to a plane passing through the center of said joint.

12. The combination with a fixed support, of a shaft member having a bearing in said support, a second shaft member, a universal joint connecting said shaft members, and a fixed casing surrounding said joint, the said casing having a tapered inturned flange extending substantially to a plane passing through the center of said joint.

13. The combination with a support, of a shaft having a bearing therein, a second shaft, a universal joint connecting said shafts, a casing inclosing said joint and secured to said support, said casing having an opening opposite said bearing through which said second shaft passes out of contact with the casing, a collar journaled upon said second shaft, and a flexible shield secured to said casing and to said collar.

In testimony whereof I affix my signature in presence of two witnesses.

RUSSELL HUFF.

Witnesses:

MILTON TIBBETTS,

CLARA I. DALE.

R. HUFF.

SAFETY STRAP AND BRACKET FOR MOTOR VEHICLES.

APPLICATION FILED AUG. 27, 1907.

913,139. Patented Feb. 23, 1909

2 SHEETS—SHEET 1.

Fig. 1.

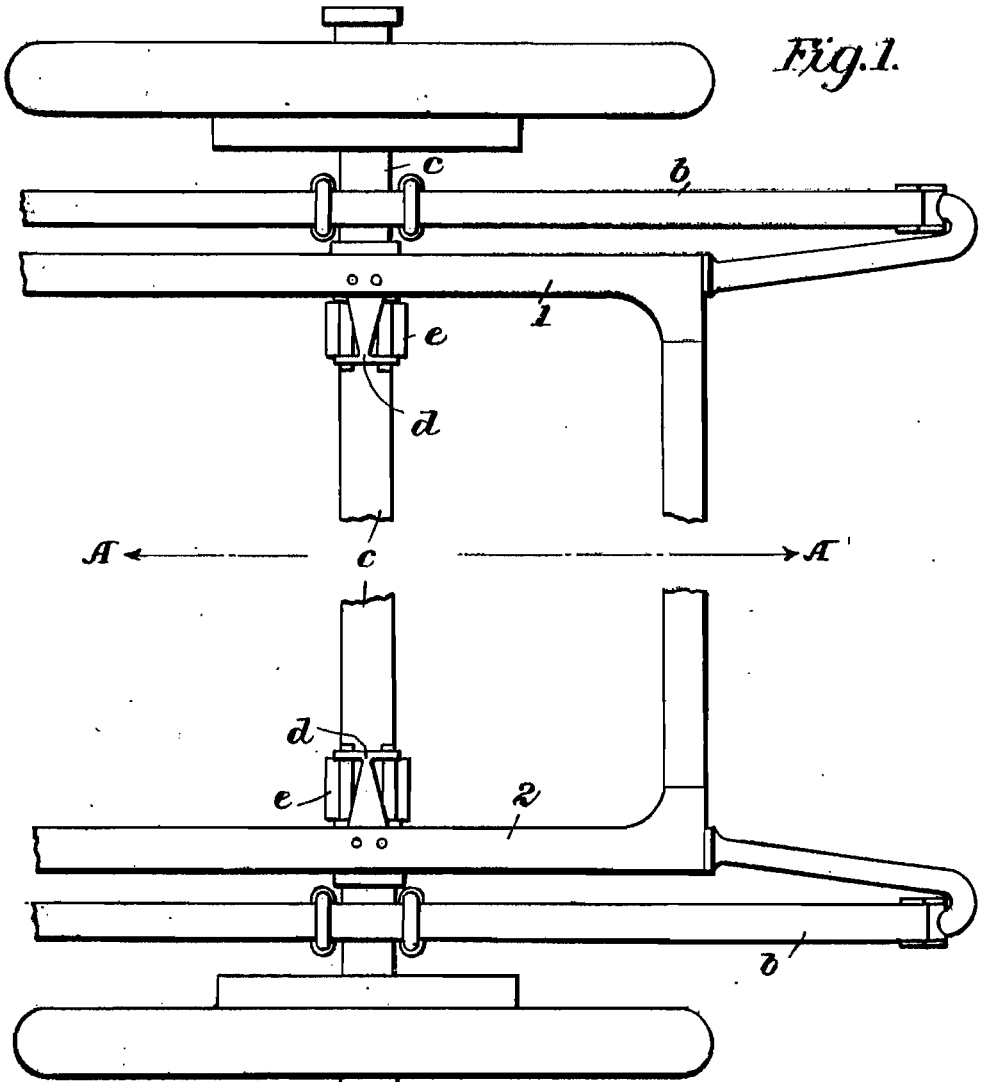

Fig. 2.

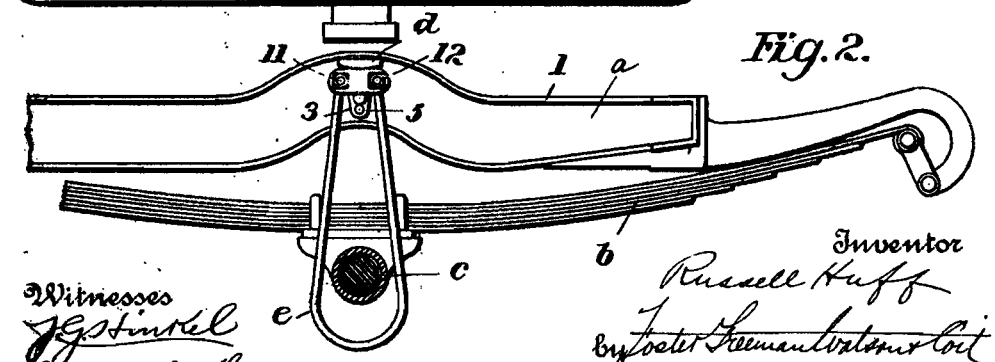

Witnesses
J. G. Stinkel
J. J. McCarthy

Inventor
Russell Huff
By Foster Freeman Watson & Coit
Attorneys

R. HUFF.

SAFETY STRAP AND BRACKET FOR MOTOR VEHICLES.

APPLICATION FILED AUG. 27, 1907.

913,139. Patented Feb. 23, 1909.

2 SHEETS—SHEET 2.

Fig. 3

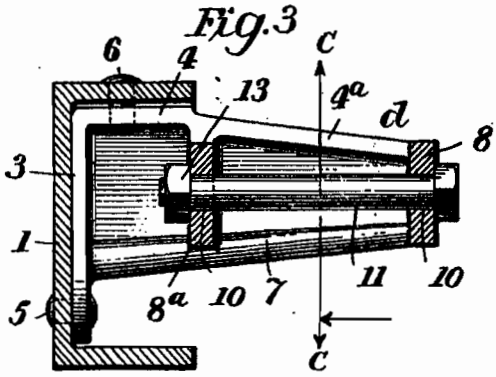

Fig. 4.

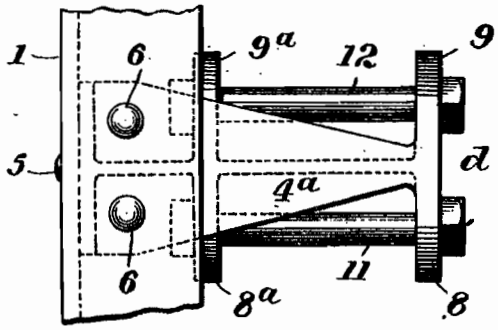

Fig. 5.

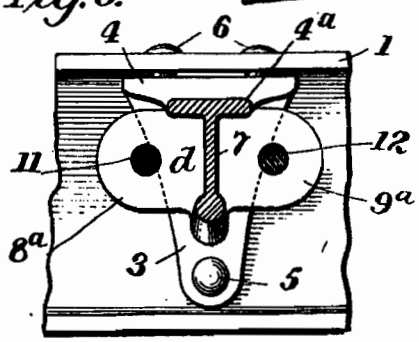

Fig. 6.

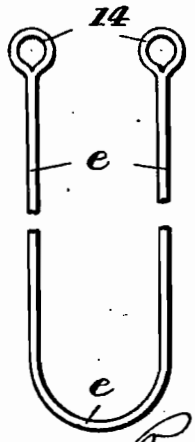

Witnesses
J. G. Finkel
J. J. McCarthy

Inventor
Russell Huff
by Foster Freeman Watson & Coe
Attorneys

BARNES PETERS, INC., LITHO., WASHINGTON, D. C.

UNITED STATES PATENT OFFICE.

RUSSELL HUFF, OF DETROIT, MICHIGAN, ASSIGNOR TO PACKARD MOTOR CAR COMPANY, OF DETROIT, MICHIGAN, A CORPORATION OF WEST VIRGINIA.

SAFETY-STRAP AND BRACKET FOR MOTOR-VEHICLES.

No. 913,139. Specification of Letters Patent. Patented Feb. 23, 1909.

Application filed August 27, 1907. Serial No. 390,351.

To all whom it may concern:

Be it known that I, RUSSELL HUFF, a citizen of the United States, residing at Detroit, Wayne county, Michigan, have invented certain new and useful Improvements in Safety-Straps and Brackets for Motor-Vehicles, of which the following is a specification.

In passing over rough roads, at high speeds, a relative vertical movement takes place between the axles and the frame and body of a motor vehicle, which it is necessary to limit in order to prevent disarrangement of the springs and injury to the vehicle, as well as to promote the comfort of the occupants of the vehicle. For this purpose it is customary to loop very heavy leather straps around the axles and around fixed supports on the vehicle frame, the strap ends being connected by buckles, so that each strap forms a continuous loop. Such straps which are both wide and thick are very difficult to buckle and unbuckle, owing to their lack of flexibility.

It is the purpose of my invention to overcome this difficulty. Instead of providing a buckle on the strap for connecting its ends, I provide loops at the ends of the straps and a novel form of bracket to which the ends of the strap are removably secured by bolts or bars which extend through the loops in the ends of the strap.

In the accompanying drawing which illustrates my invention Figure 1 is a plan view of the rear part of the frame of a motor vehicle, showing my improvements connected thereto. Fig. 2 is a section on the line A A of Fig. 1; Fig. 3 is a vertical section through one of the side bars of the vehicle frame, showing the bracket in side elevation and partly in section; Fig. 4 is a top plan view of the bracket and a portion of the frame; Fig. 5 is a section on the line C C of Fig. 3, and Fig. 6 is an edge view of the safety strap.

Referring to the drawing *a* indicates the frame of a motor vehicle, having the side bars 1 and 2, and *b*, *b* indicate the rear springs, which are supported upon the casing *c* of the rear axle, in the usual manner, and connected at their ends to the frame of the vehicle. Upon the side bars of the frame, and securely riveted thereto, immediately over the axle, are the metal brackets *d* which support the safety straps *e*. Similar brackets and straps may be arranged at the forward end of the vehicle for limiting the relative vertical movement between the forward axle and the vehicle frame and body. As the brackets and straps are all alike, a description of one bracket and strap will apply to all.

One end of each bracket *d* is suitably formed for attachment to a side bar of a vehicle frame. In the drawing, these side bars are represented as being of channel steel, and the bracket has a base or backpiece 3, of triangular form, which fits against the side or web of the bar, within the channel, and a top flange 4 which fits against the under side of the top flange of the bar. The bracket is secured in place by rivets 5 and 6 which pass through the base and top flange of the bracket, respectively. The form of the attaching portion of the bracket, will of course, depend somewhat upon the form of the part of the frame to which it is to be attached. A vertical web 7 extends outwardly, at right angles from the central part of the base 3, and flat plates or arms 8 and 9, project laterally in opposite directions from the outer end of the web 7. Similar arms 8^a and 9^a project laterally from the web 7, at a distance from the arms 8 and 9 which is somewhat greater than the width of the safety strap *e*. The arms 8 and 8^a have alining openings 10 adapted to receive a strap supporting bolt or bar 11, and the arms 9 and 9^a have similar openings adapted to receive a similar bolt or bar 12. Suitable fastening devices such as the nuts 13 are provided for securing the bolts in position.

The strap *e* has loops 14 at its ends, of sufficient size to permit the bolts to pass through. In order to secure the safety strap in position, it will be evident that it is only necessary to pass the bolts through the openings in the arms and through the loops in the strap, and to then tighten the nuts 13, and in order to remove the strap the bolts are withdrawn. The supporting arms 8^a and 9^a are arranged at such distances from the base that the strap will be held clear of the frame, and the supporting arms 8 and 9 are separated from the arms 8^a and 9^a by a distance slightly greater than the width of the strap. The top flange 4 of the bracket is preferably continued, as shown at 4^a, to the outer end of the bracket, for the purpose of

strengthening the same, and this flange preferably tapers towards its outer end. The body of the bracket, formed by the web 7 and the flange 4ª, has a T-shape, in cross section, as shown in Fig. 5. The parts of the bracket, with the exception of the removable strap-supporting bolts or bars, and their securing nuts, are preferably cast or formed in one integral structure, as shown in the drawing.

What I claim is,—

1. A safety-strap bracket for motor vehicles comprising a base, a body portion projecting from the base, supports arranged at different distances from the base, and strap-supporting bars or bolts connected at their ends to said supports and arranged longitudinally of the said body portion.

2. A safety-strap bracket for motor vehicles comprising a base, a body portion projecting from the base, perforated supports arranged at different distances from the base, and strap-supporting bars or bolts adapted to fit into the perforations in said supports and arranged longitudinally of the said body portion.

3. A safety-strap bracket for motor vehicles comprising a base, a body portion projecting from the base, supporting arms projecting laterally from the body portion at different distances from the base, and a pair of strap-supporting bars or bolts connected at their ends to said arms and arranged longitudinally of the said body portion.

4. A safety-strap bracket for motor vehicles comprising a base, a body portion projecting from the base, arms projecting laterally from said body portion, and a pair of bolts or bars, supported at their ends by said arms and arranged longitudinally of the said body portion.

5. A safety-strap bracket for motor vehicles comprising a base, a body portion projecting from the base, perforated arms projecting laterally from said body portion, and a pair of bolts adapted to fit into the perforations in said arms and arranged longitudinally of the said body portion.

6. A safety-strap bracket for motor vehicles having a base or attaching portion, a web projecting outwardly from said base, a pair of perforated arms projecting laterally from said web at each side thereof, and bolts adapted to fit into the perforations in said arms.

7. A safety-strap bracket for motor vehicles having a base or attaching portion, a body portion projecting outwardly from said base, and two substantially parallel bolts or bars each supported at its ends in said bracket and arranged longitudinally of the said body portion.

8. The combination with a side bar of a vehicle frame, of a safety-strap bracket secured to said frame and projecting laterally therefrom, a pair of bolts or bars supported at their ends in said bracket, and a strap having loops at its ends, each of said bars extending through one of said loops.

9. In a motor vehicle, the combination with a safety strap looped around the axle, and with the frame, of a bracket having a base connected with the frame, a body portion extending laterally from the frame, arms at the outer end of said body portion, and a pair of rods or bolts for sustaining the ends of the strap.

10. In a motor vehicle, the combination with the frame and the axle below the frame, of inwardly extending brackets each having a base connected with the inner side of the frame and each supporting a pair of bolts or rods, and safety straps having their ends connected to said bolts or rods, said straps being looped about the axle, for the purpose set forth.

In testimony whereof I affix my signature in presence of two witnesses.

RUSSELL HUFF.

Witnesses:

MILTON TIBBETTS,

CLARA I. DALE.

280/79

R. HUFF.

MOTOR VEHICLE.

APPLICATION FILED AUG. 28, 1907.

1,025,187.

Patented May 7, 1912

2 SHEETS—SHEET 1.

Fig. 2.

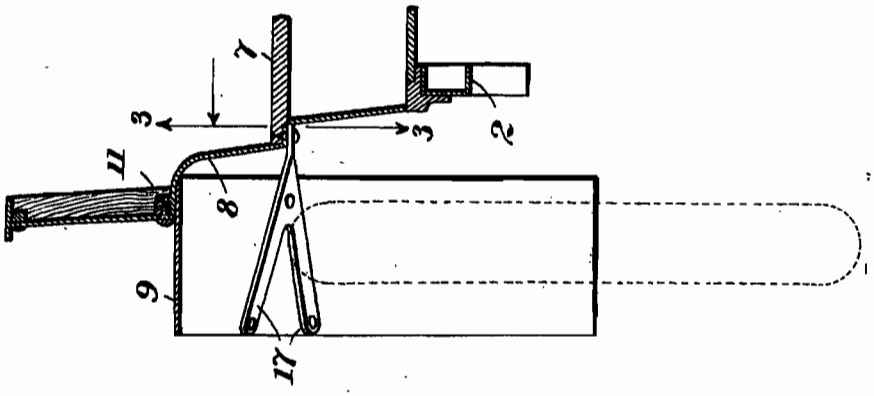

Fig. 1.

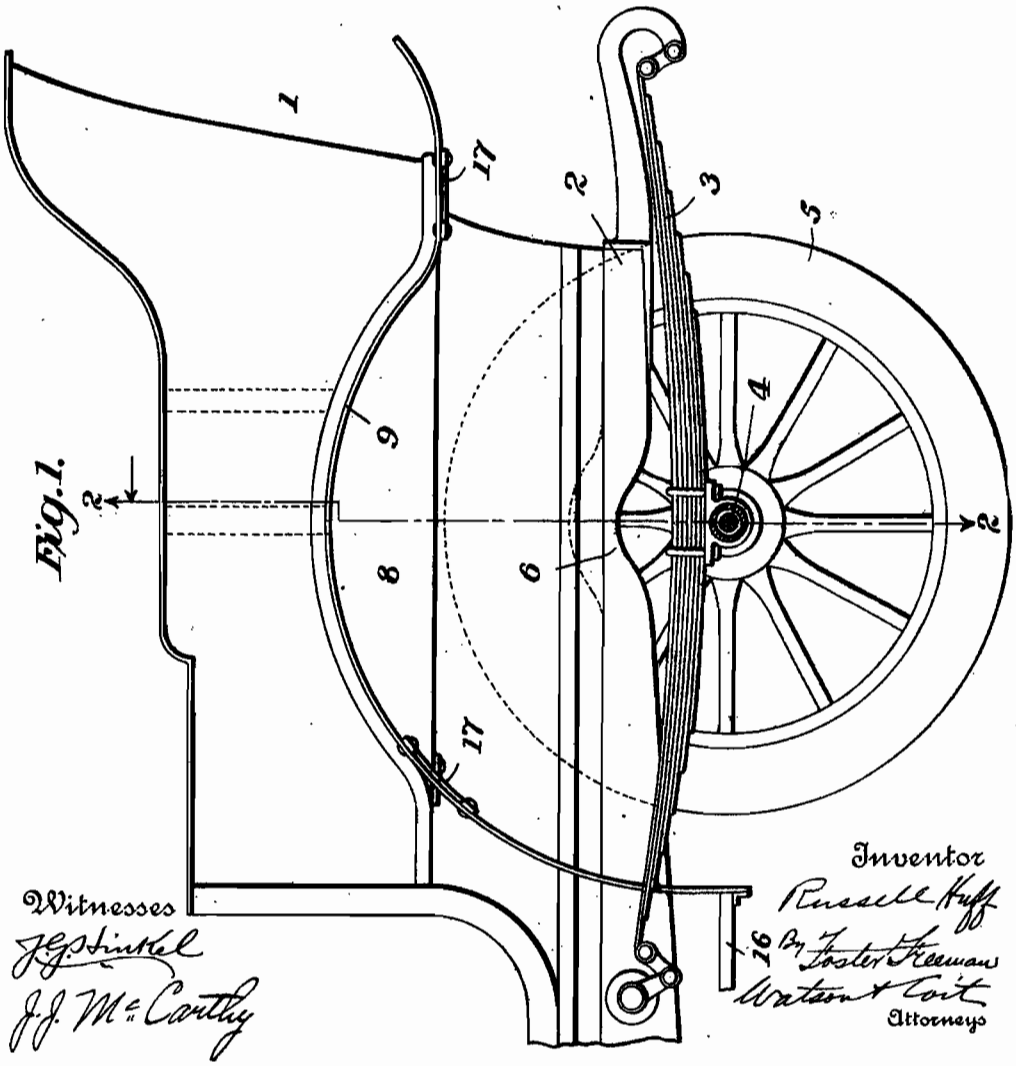

Witnesses

J. G. Stintel

J. J. McCarthy

Inventor

Russell Huff

By Foster Freeman Watson & Coit

Attorneys

R. HUFF.

MOTOR VEHICLE.

APPLICATION FILED AUG. 28, 1907.

1,025,187.

Patented May 7, 1912

2 SHEETS—SHEET 2.

Fig. 3.

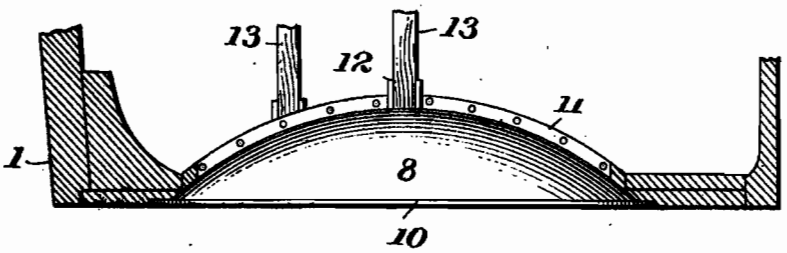

Fig. 4.

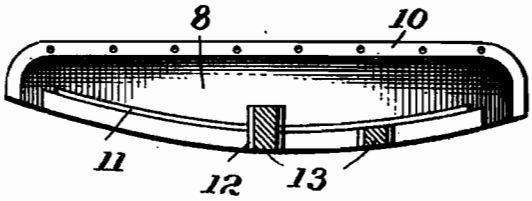

Fig. 5.

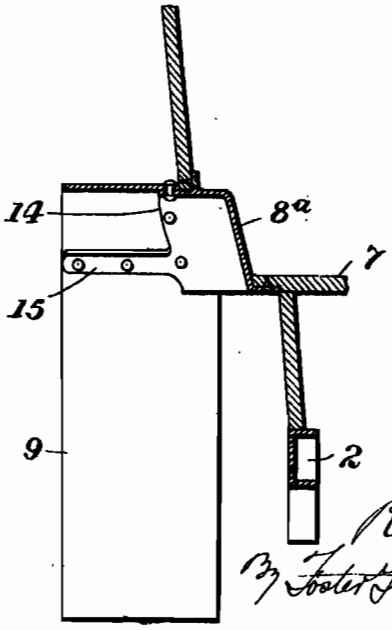

Witnesses

J. G. Stinkel

J. J. McCarthy

Inventor

Russell Huff

By Foster Freeman Watson & Coit

Attorneys

UNITED STATES PATENT OFFICE.

RUSSELL HUFF, OF DETROIT, MICHIGAN, ASSIGNOR, BY MESNE ASSIGNMENTS, TO PACKARD MOTOR CAR COMPANY, OF DETROIT, MICHIGAN, A CORPORATION OF MICHIGAN.

MOTOR-VEHICLE.

1,025,187. Specification of Letters Patent. Patented May 7, 1912.

Application filed August 28, 1907. Serial No. 390,494.

To all whom it may concern:

Be it known that I, RUSSELL HUFF, a citizen of the United States, residing at Detroit, Wayne county, Michigan, have invented certain new and useful Improvements in Motor-Vehicles, of which the following is a specification.

The present invention relates to improvements in the bodies of motor vehicles, and the objects of the invention are to so construct the body that it may be carried lower than heretofore relatively to the rear wheels and axle, while permitting of sufficient vertical movement upon its springs to provide for easy riding and the proper protection of the vehicle.

The invention will be described in detail in connection with the accompanying drawings in which,—

Figure 1 is a left side view of the rear portion of a motor car, the left rear wheel being removed; Fig. 2 is a section on the line 2—2 of Fig. 1; Fig. 3 is a side view of the concave plate shown in Figs. 1 and 2, the view being taken from the line 3—3 in Fig. 2 and in the direction of the arrow; Fig. 4 is a plan view of the plate as shown in Figs. 1 and 2; Fig. 5 is a section similar to Fig. 2 but showing a slightly modified form of the side plate.

Referring to the drawing, 1 indicates the rear part of the body of a motor car, 2 the frame upon which the body rests, 3 the springs which carry the rear part of the frame, 4 the rear axle upon which the springs rest, and 5 the rear wheels. It is desirable in motor car construction to have the body as low as possible, both to facilitate getting into and out of the vehicle and to keep the center of gravity low to prevent swaying in passing around curves, and this must be accomplished without decreasing the radius of the wheels, the tendency being to increase rather than decrease the diameter of the wheels at the present time. With this object in view I have off-set the frame 2 upwardly directly over the axle, as shown at 6 in Fig. 1, and instead of carrying the side of the body in a straight line down to the level of the seat 7, or thereabout, I have cut out the side of the body and inserted a plate 8 which is concave or recessed on its outer side to permit the body to descend so that the upper side of the wheel may pass the level of the seat.

Referring to Figs. 1 to 4, it will be seen that the plate 8 is externally concave, that is, concave or recessed on its outer side, provided with a level or horizontal edge, and with an upper edge which is curved substantially to the curvature of the wheel guard 9. The lower edge is provided with a horizontal flange 10 provided with holes for screws or bolts by which it may be attached to the seat or other part of the body, while the upper edge is provided with a substantially vertical flange 11 which is connected to and supports the side of the body. The plate 8 is preferably cast of aluminum or other suitable metal and lugs 12 may be cast on it to which the vertical parts 13 of the framework may be attached.

As shown in Fig. 5 the plate 8^a is similar to the plate 8 excepting that the upright and horizontal portions meet at an angle instead of being united by a curve as in Fig. 2, and excepting also that the horizontal portion, which is curved longitudinally to the curvature of the wheel guard 9, is provided with a flange 14 to which the wheel guard is connected by rivets or otherwise. Arms 15 for supporting the wheel guard may also be made integral with the plate 8^a. The concave or recessed plates 8 and 8^a not only serve to permit the wheel to rise, but they serve as brackets to stiffen and strengthen the body of the vehicle and to rigidly connect the sides with the lower part of the body. The wheel guard 9 is connected at one end with the step 16 and it may be supported at intermediate points either by connection with the flange of the plate 8^a, as shown in Fig. 5, or by suitable brackets 17, as shown in Figs. 1 and 2.

Having described my invention what I claim and desire to secure by Letters Patent is:

1. In a motor vehicle, the combination with the rear axle and wheels, and the springs supported on said axle, of the body supported on said springs, said body comprising horizontally-elongated externally-concave or recessed metal plates partly extending over said wheels and arranged to permit the body to descend relatively to the said wheels, said plates having straight lower

edges and upper edges conforming to the curvature of the wheel guards and having flanges on said edges for attachment to the adjacent parts of the body, substantially as described.

2. In a motor vehicle, the combination with the rear axle and wheels and springs supported on said axle, of the frame having off-set portions over said axle, the body supported on said frame, said body comprising horizontally-elongated externally concave or recessed metal plates partly extending over said wheels, and arranged to permit the body to descend relatively to said wheels, substantially as described.

3. In a motor vehicle, the combination with the rear axle and wheels, and the springs supported on said axle, of the body supported on said springs, said body comprising horizontally-elongated externally concave or recessed metal plates partly extending over said wheels and arranged to permit the body to descend relatively to said wheels, the upper edge of each of said plates conforming substantially to the curvature of the wheel guard and having a vertical flange formed adjacent and parallel to said edge, and transverse parallel lugs for attachment to the adjacent parts of the body.

4. In a vehicle body, a lower panel, an upper panel overhanging the lower panel and having a segmental portion cut away from its overhanging edge, and an externally concave or recessed metal plate at said cut-away edge, said plate having flanges to secure it to the frame of the body.

5. In a vehicle body, a lower panel, an upper panel overhanging the lower panel and having a segmental portion cut away from its overhanging edge, and an externally concave or recessed metal plate at said cut-away edge, said plate having longitudinal and transverse flanges to secure it to the frame of the body.

6. In a motor vehicle, the combination with the rear axle and wheels and the body supported on springs on said axle, said body comprising lower panels wholly inside the wheels and upper panels overhanging the wheels, said upper panels having segmental cut-away portions over the wheels, and horizontally-elongated externally-concave or recessed metal plates filling said cut-away portions and arranged to permit said body to descend relatively to said wheels.

In testimony whereof I affix my signature in presence of two witnesses.

RUSSELL HUFF.

Witnesses:
MILTON TIBBETTS,
CLARA I. DALE.

✓ 261/46

R. HUFF.

CARBURETER.

APPLICATION FILED AUG. 29, 1907. RENEWED DEC. 31, 1913.

1,095,326. Patented May 5, 1914.

3 SHEETS—SHEET 1.

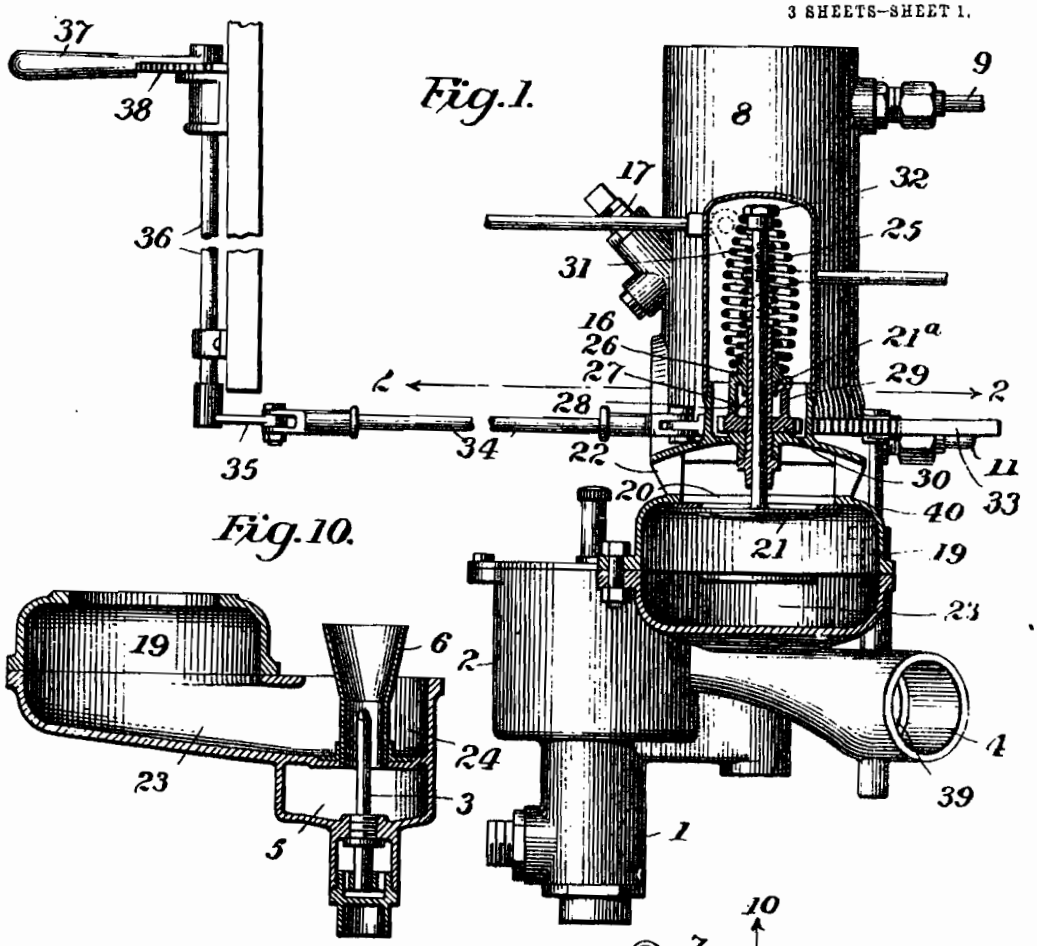

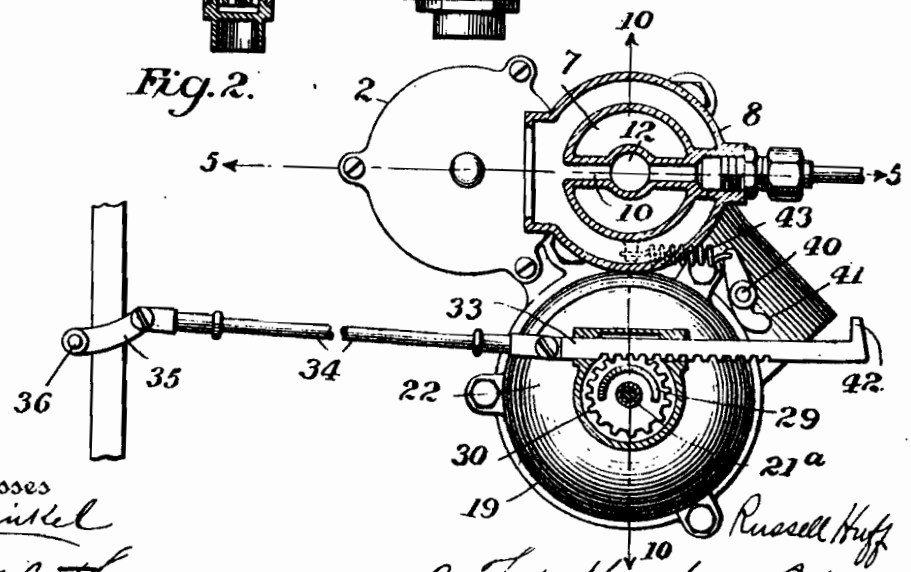

Witnesses
J. G. Stinkel
J. J. McCarthy

Russell Huff
By Foster Freeman Watson & Coit
Attorneys

R. HUFF.

CARBURETER.

APPLICATION FILED AUG. 29, 1907. RENEWED DEC. 31, 1913.

1,095,326. Patented May 5, 1914.

3 SHEETS-SHEET 2.

Fig. 3.

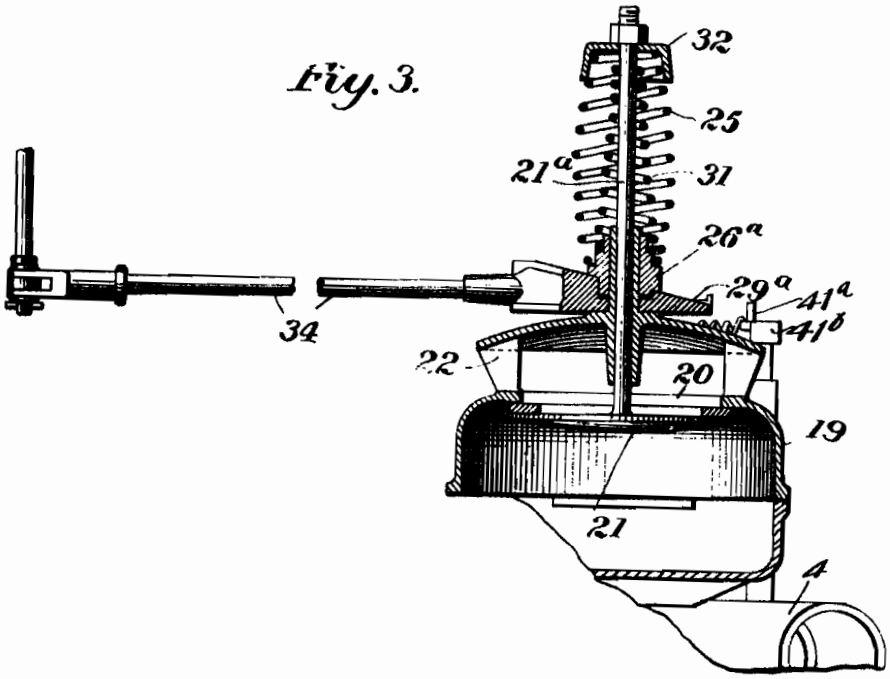

Fig. 4.

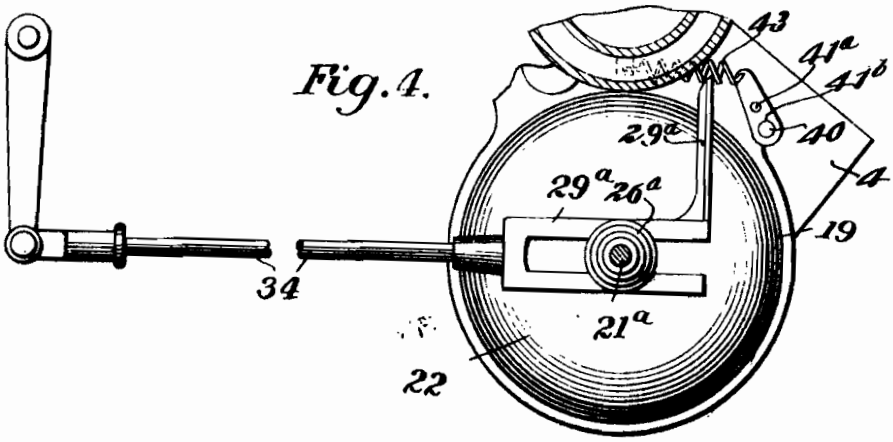

Witnesses

J. G. Stinstel

J. J. McCarthy

Inventor

Russell Huff

By Foster Freeman Watson & Coe

Attorneys

R. HUFF.

CARBURETER.

APPLICATION FILED AUG. 29, 1907. RENEWED DEC. 31, 1913.

1,095,326. Patented May 5, 1914.

3 SHEETS—SHEET 3.

Fig. 5.

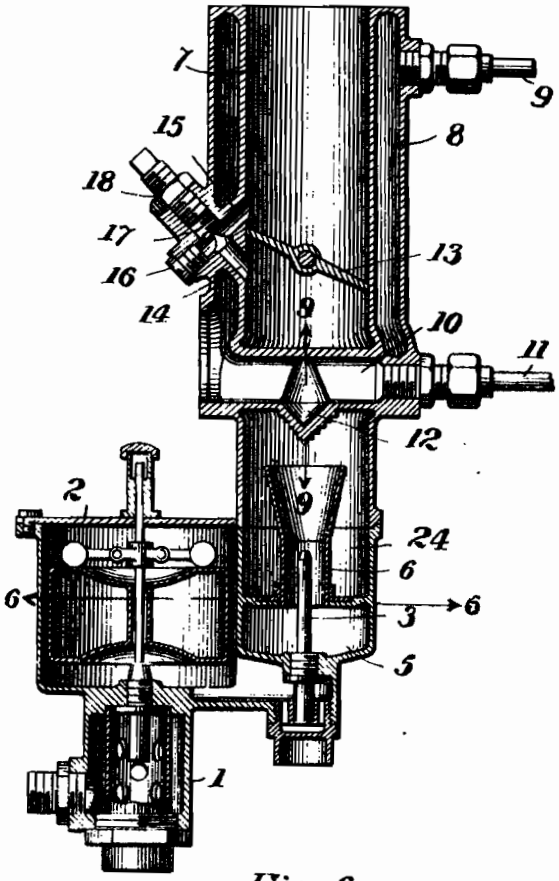

Fig. 7.

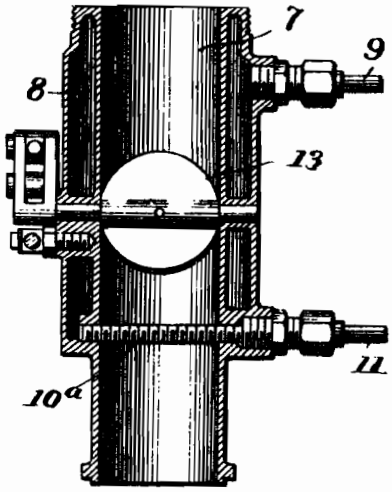

Fig. 8.

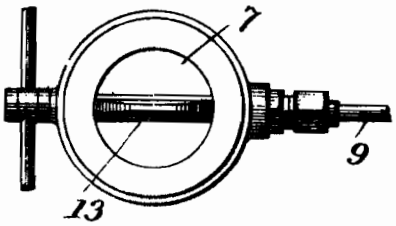

Fig. 6.

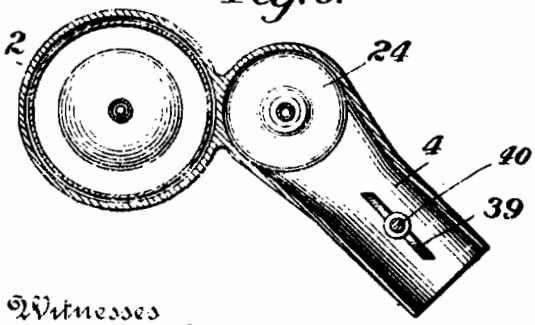

Fig. 9.

Witnesses

J. G. Hinkel

J. J. McCarthy

Inventor

Russell Huff

By Foster Freeman Watson & Coit

Attorneys

UNITED STATES PATENT OFFICE.

RUSSELL HUFF, OF DETROIT, MICHIGAN, ASSIGNOR, BY MESNE ASSIGNMENTS, TO PACKARD MOTOR CAR COMPANY, OF DETROIT, MICHIGAN, A CORPORATION OF MICHIGAN.

CARBURETER.

1,095,326. Specification of Letters Patent. Patented May 5, 1914.

Application filed August 29, 1907, Serial No. 390,652. Renewed December 31, 1913. Serial No. 809,761.

To all whom it may concern:

Be it known that I, RUSSELL HUFF, a citizen of the United States, residing at Detroit, Wayne county, Michigan, have invented certain new and useful Improvements in Carbureters, of which the following is a specification.

The present invention relates more particularly to carbureters and it consists in various improvements in the construction and working of such devices.

The invention will be described in connection with the accompanying drawing, in which—

Figure 1 is a side elevation, partly in section, of a carbureter embodying the invention; Fig. 2 is a plan view partly in section on the line 2—2 of Fig. 1; Figs. 3 and 4 are, respectively, a sectional elevation and a plan illustrating a modification of a part of the devices shown in Figs. 1 and 2; Fig. 5 is a section on the line 5—5 of Fig. 2; Fig. 6 is a section on the line 6—6 of Fig. 5; Fig. 7 is similar to part of Fig. 5, showing a modification thereof; Fig. 8 is a plan of the parts shown in Fig. 7; Fig. 9 is a section on the line 9—9 of Fig. 5, and Fig. 10 is a section on the line 10—10 of Fig. 2.

Referring to the drawing, 1 indicates the gasolene filter well and 2 the float chamber. These parts are of ordinary construction and need not be described in detail. It will be understood that the gasolene passes from the float chamber directly into the nozzle 3, and that it is drawn from the nozzle periodically by the suction created in the cylinders by the working of the pistons therein.

Referring to Figs. 1, 2 and 5, 4 indicates the primary air intake which is open at its outer end to the atmosphere and communicates at its inner end with a chamber 5 surrounding the gasolene nozzle 3. From the chamber 5, a tube 6, concentric with the nozzle and surrounding the same leads upward into the mixing chamber 7. The upper portion of the tube 6 is flared outwardly preferably above the outlet of the nozzle 3. It will be understood that at each cycle of operations of the engine the gasolene is drawn from the nozzle 3 and a supply of air is drawn through the intake 4 and mixes with the gasolene in the mixing chamber. The mixing chamber 7 is constructed with a water jacket 8 through which hot water is circulated to assist in vaporizing the gasolene or other hydrocarbon. The hot water is preferably taken directly from the water jacket of the engine cylinder and conducted into the water jacket 8 through the inlet 9. After passing through the water jacket the water is conducted diametrically across the mixing chamber in the tube 10 to an outlet 11. As shown in Figs. 5 and 9, the tube 10 is formed with an enlargement 12 having a downwardly depending corrugated surface directly over the gasolene nozzle 3. This provides an enlarged heated surface against which the mixture of gasolene and air is projected, which greatly facilitates the vaporizing of the gasolene and increases the efficiency of the carbureter. The mixture is conducted from the upper end of the mixing chamber through suitable conduits to the cylinder or cylinders of the engine.

Within the mixing chamber is a throttle valve 13 which, as shown in Fig. 5, is adapted to completely close the direct passage through the mixing chamber. It is found desirable to provide a channel or by-pass leading through or around the valve 13 to provide for a minimum charge of mixture which will permit of minimum speed of the engine. In the present instance I provide a by-pass which is accessible from the outside of the mixing chamber and adjustable to vary the minimum supply of mixture.

Referring to Fig. 5, 14, 15 indicate two bores or passages which intersect and which extend entirely through the wall of the mixing chamber and through solid metal extending across the water jacket. One of these tubes is closed at the outside by a plug 16 while the other is closed by an adjustable valve 17, the said valve being adapted to close the by-pass 14, 15, or to leave same open to any desired degree. The valve 17 is provided with a lock nut 18 for holding the valve in any desired adjustment. It will be obvious that the by-pass can be adjusted with ease from the outside and also that it can be readily cleaned by removing the plug 16 and the valve 17.

In Figs. 1 and 2 I have shown means for providing an auxiliary air supply to the mixing chamber, such additional supply being necessary when the engine is running at a high speed, and I have also shown means for regulating this auxiliary air supply.

Referring to these figures, 19 indicates an air chamber which has an opening 20 in its upper side normally closed by a valve 21. The valve is supported by a spider 22 having legs resting on the air chamber 19 and between which the air may enter said chamber when the valve is opened. From the lower part of the chamber 19 a passage or conduit 23 conducts the air to the space 24 surrounding the tube 6 which receives air from the primary air intake 4. The chamber 19 and the passage 23 may be termed a secondary or supplemental air intake.

The valve 21 is normally held in closed position by a spring 25, the upper end of which bears on a head upon the upper end of the stem 21[a] of the valve, and the lower end of which bears upon a sliding abutment 26 adapted to slide vertically upon a fixed tube 27 in which the valve stem is guided. The abutment 26 is prevented from turning on the tube 27 by suitable means such as a key or spline, and it is provided on its lower face with a wedge or cam, as shown in Fig. 1. This wedge or cam 28 is circular or cylindrical and has an inclined under face which rests on and coöperates with a reversely inclined face of the circular cam or wedge 29 carried by a gear 30. By rotating the gear 30 the abutment 26 may be raised or lowered, thus placing more or less tension on the spring 25 which normally closes the valve 21.

Surrounding the stem of the valve 21 is a second spring 31 which is somewhat shorter and stiffer than the spring 25 and which rests on the abutment 26. This spring is normally relaxed, being out of contact with the head 32 of the valve stem. When the engine is running at low speeds and the suction is comparatively light, the valve 21 will be controlled principally by the spring 25, the spring 31 acting as a buffer or yielding stop for the valve and tending to effect a prompt return of the same to its seat. At higher speeds, however, or when the suction is greater, the spring 31 will coöperate with the spring 25 to automatically control the extent of opening of the valve 21, the extent of which opening should manifestly be greater that when the engine is running at low speeds, although not so great as would be permitted by the spring 25 acting alone. In other words, it may be said within a certain range the valve is controlled almost solely by the lighter spring, while at higher speeds it is controlled by both springs, the effect being that at high speeds the opening is less in proportion to the suction than at low speeds. The tension on the spring 25 and the point in the travel of the valve at which the spring 31 becomes effective, are controlled by the adjustable head 32.

By rotating the gear 30 sufficient tension may be placed on the springs 25 and 31 to prevent the opening of the valve 21 excepting when the vehicle is running at a very high speed and the suction is very great. The gear is controlled by a rack 33, connecting rod 34, arm 35, rock shaft 36 and hand lever 37, the said rock shaft being preferably mounted in bearings on the dash board. A suitable latch or pawl on the hand lever 37 is adapted to lock the lever in any desired adjustment with respect to a notched segment 38.

The primary air intake 4 is provided with a valve 39 by means of which it may be completely closed when desired. The valve 39 is operated by a shaft 40 (Figs. 1, 2 and 6) and upon the upper end of the shaft is an arm 41 in the path of a shoulder 42 upon the rack 33. A spring 43 connected with the second arm of the shaft 40 normally holds the valve 39 open but when the lever 37 is drawn to the limit in one direction to secure the closing of the auxiliary air valve 21 the shoulder 42 engages the arm 41 and rotates the shaft 40, closing the main air valve 39. The object of providing means for closing the main air intake and placing the valve of the auxiliary air intake under heavy pressure is to enrich the charge of mixture passing to the cylinders in stopping the motor. Thus by gradually closing the air valves as the motor comes to a stop, the mixture drawn into the cylinders will gradually increase in richness and if the valves be kept practically closed during the last few strokes of the engine, the cylinders will be provided with a rich mixture which will ignite if the engine has stood inactive for some hours. With this arrangement of the valves, the motor can be started by simply switching on the ignition current, thus obviating the necessity of "cranking."

In Figs. 3 and 4 I have shown a modified form of cam for placing tension on the auxiliary air valve. Referring to these figures, 26[b] indicates the abutment for the springs 25 and 31, and 29[b] indicates a double wedge having its upper surfaces inclined to operate with inclined surfaces of the abutment 26[b]. This straight inclined wedge operates exactly as the spiral wedge 29 to adjust the tension of the springs 25 and 31. The spring 25 acts upon the auxiliary air inlet valve 21, and only the spring 31 bears upon said valve except to form a cushion or yielding stop for the valve if it is violently opened. The tension of the spring 25 when the wedge is driven in to the limit both springs are compressed against the head 32 on the valve stem and the valve is tightly closed and opens only under very heavy suction due to rapid movement of the motor. This form of the invention may also be arranged to close the primary inlet throttle valve and for this purpose I have shown a laterally extending arm 29[b] on one side of the wedge 29[b], this

arm being adapted to engage a pin 41ᵃ on the arm 41ᵇ, which actuates the valve 39, when the wedge is moved to a position to give the maximum tension to the springs. Further movement of the wedge after the arm 29ᵇ engages the pin 41ᵃ causes the valve to be swung to closed position and when the wedge is moved in the opposite direction the valve is opened by the spring 43.

In Figs. 7 and 8, the outlet from the water jacket 8 is through a tube 10ᵃ extending diametrically across the mixing chamber directly over the gasolene nozzle. This tube 10ᵃ is preferably threaded to increase its surface and the gasolene is sprayed toward it. The tube thus acts as a baffle to intercept any unvaporized gasolene and hold it in a current of air, and it also serves to vaporize the gasolene, due to its heat.

Having described my invention, what I claim and desire to secure by Letters Patent is:

1. In a carbureter for hydrocarbon engines, the combination with a gasolene inlet nozzle of a primary air intake, a secondary air intake, independently operating valves for said intakes and a common means controlling said valves.

2. In a carbureter for hydrocarbon engines, the combination with a gasolene inlet nozzle of a primary air intake having a normally open valve, a secondary air intake having a valve normally closed under tension, and a common means operating to increase the tension on the valve of the secondary air intake and to close the valve of the primary air intake.

3. In a carbureter for hydrocarbon engines, the combination with a gasolene inlet nozzle of two independent air intakes for supplying air to mix with the gasolene from said nozzle, independently operating valves in said intakes, and means for closing said valves to increase the richness of the mixture supplied to the engine, for the purpose set forth.

4. In a carbureter for hydrocarbon engines, the combination with a gasolene inlet nozzle arranged to discharge into a mixing chamber, of a primary air intake leading to said chamber, a secondary air intake therefor, a valve for closing said latter intake, a spring normally holding said valve closed, a second spring normally relaxed and serving as a cushion or yielding stop for the opening movements of said valve and means for placing the valve under tension of both said springs, for the purpose set forth.

5. In a carbureter for hydrocarbon engines, the combination with a gasolene inlet nozzle arranged to discharge into a mixing chamber, of a primary air intake leading to said chamber, a secondary air intake therefor, a valve for closing said latter intake, a spring normally holding said valve closed, a second spring normally relaxed and serving as a cushion or yielding stop for the opening movements of said valve, and a manually operated cam for placing the valve under tension of both said springs, for the purpose set forth.

6. In a carbureter for hydrocarbon engines, the combination with a gasolene inlet nozzle arranged to discharge into a mixing chamber, of a primary air intake leading to said chamber, a secondary air intake therefor, a valve for closing said latter intake, a spring normally holding said valve closed, a second spring normally relaxed and serving as a cushion or yielding stop for the opening movements of said valve, and a cam for placing the valve under tension of both said springs, for the purpose set forth.

7. In a carbureter for hydrocarbon engines, the combination with a gasolene inlet nozzle arranged to discharge into a mixing chamber, of a primary air intake leading to said chamber, a secondary air intake therefor, a valve for closing said latter intake, a spring normally holding said valve closed, a second spring normally relaxed and serving as a cushion or yielding stop for the opening movements of said valve, a sliding abutment for said springs, and a cam operating on said abutment to place the valve under tension of both said springs, for the purpose set forth.

8. In a carbureter for hydrocarbon engines, the combination with a mixing chamber, a gasolene nozzle therein, and a primary air intake provided with a valve and a rock shaft for operating said valve, of a secondary air intake provided with a valve, a spring for normally closing said valve, and means for simultaneously increasing the tension of said spring and rocking said shaft to close the valve of the primary air intake.

9. In a carbureter for hydrocarbon engines, the combination with a mixing chamber, of a primary air intake leading to said chamber, a secondary air intake communicating with said chamber, a valve for closing the latter intake, a spring normally holding said valve closed, and a wedge shaped cam movable relatively to the valve to increase the tension of the spring.

10. In a carbureter for hydrocarbon engines, the combination with a mixing chamber, of a primary air intake leading to said chamber, a secondary air intake communicating with said chamber, a valve for closing the latter intake, a spring normally holding said valve closed, and a straight wedge shaped cam movable relatively to the valve to increase the tension of the spring.

11. In a carbureter for hydrocarbon engines, the combination with a mixing chamber, of a primary air intake leading to said chamber, a secondary air intake communicating with said chamber, a valve for clos-

ing the latter intake, a spring normally holding said valve closed, a second spring normally inoperative on the valve, and a wedge shaped cam movable relatively to the valve and adapted to place the valve under tension of said second spring.

12. In a carbureter for hydrocarbon engines, the combination with a mixing chamber, of a primary air intake leading to said chamber, a secondary air intake communicating with said chamber, a valve for closing the latter intake, a spring normally holding said valve closed, a second spring normally inoperative on the valve, and a wedge shaped cam movable relatively to the valve and adapted to increase the pressure of both of said springs upon the valve to close the latter.

13. In a carbureter for hydrocarbon engines, the combination with the mixing chamber, of an air intake, a valve therefor, a casing or support in which the stem of the valve is mounted, a spring surrounding the stem of the valve and bearing at one end upon a movable block and at the other end upon a head fixed to said stem, and a wedge shaped cam arranged to shift the movable block on the stem to increase the tension of said spring.

14. In a carbureter, the combination of a frame forming a mixing chamber adapted for connection with an engine to be supplied, means for supplying fuel into said chamber, primary and secondary air inlets to said mixing chamber, a valve for said secondary inlet controlled by suction within the mixing chamber to admit air through said inlet to the mixing chamber, a spring for primarily resisting the opening of said valve and for controlling the operation of said valve during a certain range of suction within the mixing chamber, and a second spring adapted to be automatically brought into service when the suction exceeds a certain value to assist the first spring in controlling the opening and operation of said valve during said increased suction.

15. In a carbureter, the combination of a frame forming a mixing chamber adapted for connection with an engine to be supplied, means for supplying fuel into the mixing chamber, primary and secondary air inlets for said mixing chamber, a valve for said secondary inlet adapted to be opened by the suction within said chamber, a comparatively weak spring tending to prevent opening of said valve during a certain range of suction within the chamber, and a comparatively heavy spring primarily inactive and adapted to be automatically brought into service by increased suction within the chamber to assist the weak spring in controlling the opening and operation of said valve during such increased suction.

16. In a carbureter, the combination of a frame forming a mixing chamber adapted to be connected with an engine to be supplied, means for supplying fuel into the mixing chamber, primary and secondary air inlets for said chamber, a valve for said secondary inlet adapted to be opened by suction within the chamber, a comparatively light spring always engaging the valve and tending to resist opening thereof, and a comparatively heavy spring normally disconnected from said valve and adapted to be automatically brought into operative association with said valve, after a predetermined degree of opening of said valve, whereupon both springs will coöperate to control the opening and operation of the valve to regulate the air flow through said inlet.

17. In a carbureter, the combination of a frame forming a mixing chamber adapted to be connected with an engine to be supplied, means for supplying fuel into the mixing chamber, primary and secondary air inlets for said chamber, a valve for said secondary inlet adapted to be opened by suction within the chamber, a comparatively light spring always engaging the valve and tending to resist opening thereof, a comparatively heavy spring normally disconnected from said valve and adapted to be automatically brought into operative association with said valve after a predetermined degree of opening of said valve, whereupon both springs will coöperate to control the opening and operation of the valve to regulate the air flow through said inlet, and adjusting means for determining the degree of opening of said valve which will cause said second spring to become operatively active.

18. In a carbureter, the combination of a frame forming a mixing chamber adapted for connection with an engine to be supplied, means arranged below said chamber and in alinement therewith for supplying fuel into the chamber, a primary air inlet below said means, a secondary air inlet arranged laterally of said chamber and in communication therewith, a valve for said secondary inlet adapted to be opened by suction within the mixing chamber to admit air through said inlet to the mixing chamber, a spring for independently resisting the opening of said valve for the lower range of suction in said chamber, and a second spring adapted to coöperate with the first-mentioned spring to resist the opening of said valve for the higher range of suction in said chamber.

19. In a carbureter, the combination of a frame forming a mixing chamber adapted for connection with an engine to be supplied, a throttle valve in said chamber, means arranged below said chamber and in alinement therewith for supplying fuel

[illegible] a primary air inlet below said means, a secondary air inlet arranged laterally of said chamber and in communication therewith, a valve for said secondary inlet adapted to be opened by suction within the mixing chamber to admit air through said inlet to the chamber, a spring for independently resisting the opening of said valve for the lower range of suction in said chamber, a second spring arranged to be primarily inactive and also coöperate with the first-mentioned spring to resist the opening of said valve for the higher range of suction in said chamber, and means for adjusting the tension of both of said springs.

20. In a hydrocarbon motor, the combination with the carbureter having main and auxiliary air intakes, of a shut-off valve in the main air intake, a spring closed valve in the auxiliary air intake, means for closing said shut-off valve, means for regulating the tension on said spring closed valve, and means adapted to automatically open said shut-off valve when said regulating means is actuated to decrease the tension on said spring closed valve.

21. In a hydrocarbon motor, the combination with a carbureter having main and auxiliary air intakes, of means for closing said main intake, a spring closed valve for the auxiliary air intake, means for regulating the tension on said spring closed valve, and for automatically opening said main intake [illegible] means when the tension on said spring closed valve is decreased.

22. In a carbureter for hydrocarbon engines, the combination with the gasolene inlet nozzle of a plurality of air intakes, independently operating valves for said intakes, and a common means coöperating with said valves in succession for controlling the passage of air through said intakes.

23. In a carbureter for hydrocarbon engines, the combination with the mixing chamber and the throttle valve therein, of the gasolene inlet nozzle, a primary air intake supplying air adjacent said nozzle, a secondary air intake having a spring closed valve, and manually controlled means acting independently of the throttle valve for restricting the passage of air through both of said intakes.

24. In a carbureter for hydrocarbon engines, the combination with a gasolene inlet nozzle, of a primary air intake supplying air adjacent said nozzle, a secondary air intake having a spring closed valve, and manually controlled means for successively restricting the passage of air through both of said intakes.

25. In a carbureter for hydrocarbon engines, the combination with a gasolene inlet nozzle, of a primary air intake supplying air adjacent said nozzle, a secondary air intake having a spring closed valve, and manually controlled means for simultaneously restricting the passage of air passing through both of said intakes said means operating to vary the opening resistance of said spring closed valve.

26. In a carbureter for hydrocarbon engines, the combination with a fuel inlet nozzle, of a primary air intake, a secondary air intake having an automatically operating valve for controlling the same, a plurality of concentrically arranged springs adapted to resist opening movements of said valve, and means comprising a member having an inclined surface for varying the tension of the outer of said springs.

27. In a carbureter for hydrocarbon engines, the combination with a fuel inlet nozzle, of a primary air intake, a secondary air intake, a valve for the latter intake having a stem, an abutment on said stem, a plurality of concentrically arranged compression springs surrounding said stem and having [illegible] ends adapted to be engaged by said abutment, and means engaging the opposite ends of said springs and including a member having an inclined surface whereby the tension of the outer of said springs is varied.

In [illegible] whereof I affix my signature in [illegible] two witnesses.

RUSSELL HUFF

Witness:
M[illegible] TIBBETTS.
C[illegible] DALE.

No. 891,357. PATENTED JUNE 23, 1908.

F. J. MOHAN.

MOTOR VEHICLE.

APPLICATION FILED SEPT. 30, 1907.

Fig. 1.

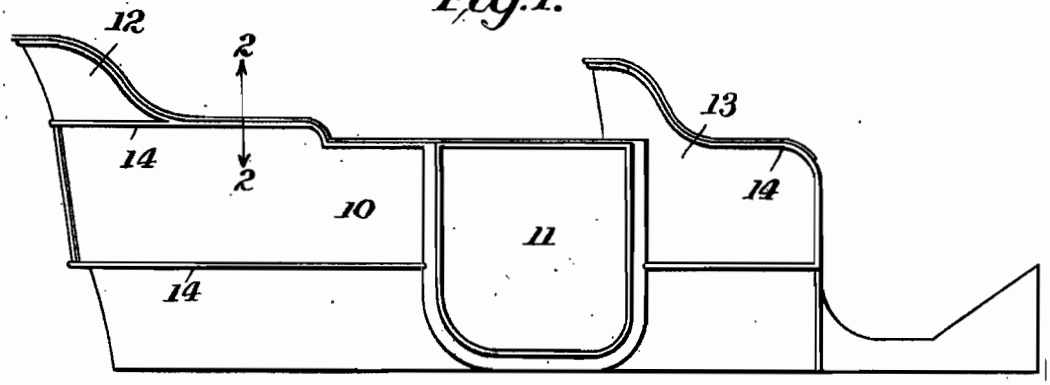

Fig. 2.

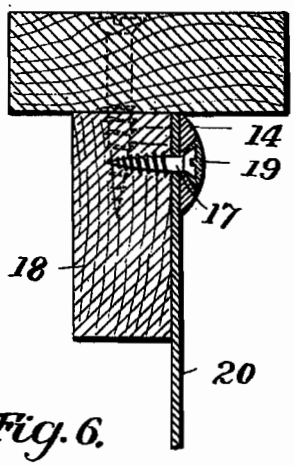

Fig. 3.

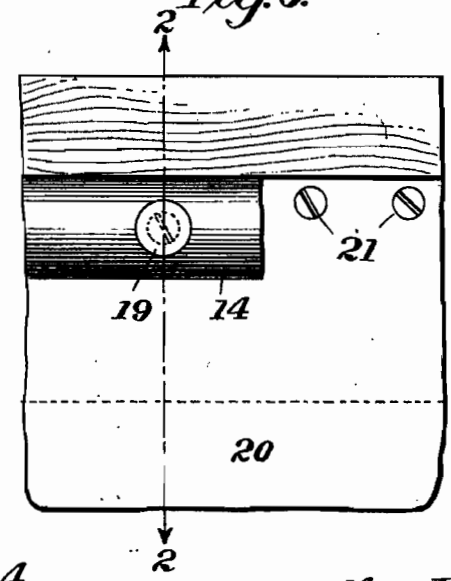

Fig. 6.

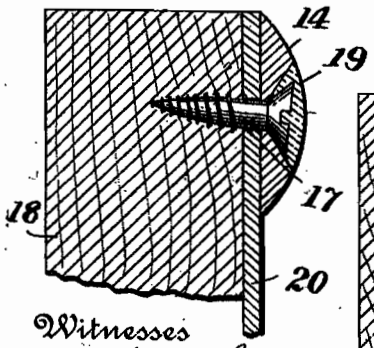

Fig. 4.

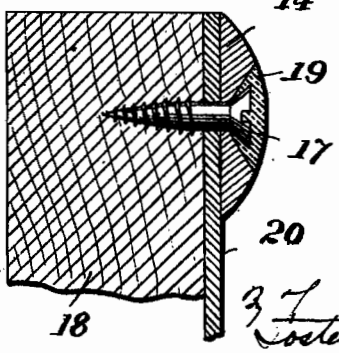

Fig. 5.

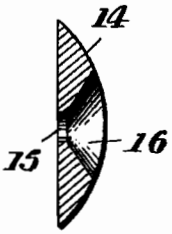

Witnesses

J. G. Stinkel

J. J. McCarthy

Inventor

Frank J. Mohan

By Foster Freeman Watson & Coit

Attorneys

UNITED STATES PATENT OFFICE.

FRANK J. MOHAN, OF DETROIT, MICHIGAN, ASSIGNOR TO PACKARD MOTOR CAR COMPANY, OF DETROIT, MICHIGAN, A CORPORATION OF WEST VIRGINIA.

MOTOR-VEHICLE.

No. 891,357. Specification of Letters Patent. Patented June 23, 1908.

Application filed September 30, 1907. Serial No. 395,283.

To all whom it may concern:

Be it known that I, FRANK J. MOHAN, a citizen of the United States, and resident of Detroit, Wayne county, State of Michigan, have invented certain new and useful Improvements in Motor-Vehicles, of which the following is a specification.

In finishing the bodies of motor vehicles it is customary to use a metal strip or bead as a border to the various panels, such strip usually being segmental in cross section. It has been customary to attach these beads to the bodies of motor vehicles by means of suitable nails having heads which fit countersunk openings in the beads or by means of screws fitting such countersunk openings, the heads of the nails or screws being afterwards filed to conform to the contour of the bead. In finishing the bodies the beads are painted or enameled and it has been found that the severe strains to which automobile bodies are subjected almost invariably loosen the screws or nails or cause them to work with respect to the beads, thereby producing cracks in the enamel at the joints between the screws or nails and the bead and disfiguring the vehicle.

The object of my invention is to obviate these difficulties and I accomplish this object by countersinking the screw holes in the beads to a depth greater than that of the screw heads and with a counter sink having a greater angle or wider pitch than that of the screw head, filling the countersunk hole with solder or other suitable fusible metal and finally shaping the solder to conform to the countour of the bead. By making the angle of the countersink greater than that of the screw head, a portion of the solder flows under the head of the screw and thus anchors the button of solder in the countersunk hole preventing it from falling out in case it should become detached from the bead, which however seldom occurs. The solder in turn enters the slot in the screw head and otherwise attaches itself to the screw, preventing the latter from turning. Thus the button of solder and the screw are interlocked, each holding the other in place.

The invention will be fully described in connection with the accompanying drawing, in which,

Figure 1 is a side view or diagram of a motor vehicle body; Fig. 2 is a section on the line 2—2 of Figs. 1 and 3; Fig. 3 is an enlarged view of a portion of Fig. 1, showing details of construction; Fig. 4 is an enlargement of a portion of Fig. 2; Fig. 5 is a section of the bead or trim; and Fig. 6 is a view similar to Fig. 4 showing a slightly modified arrangement of the invention.

Referring to the drawing, 10 indicates the body of an automobile, 11 the side door, 12 the back and side arms of the rear seat and 13 the back and side arms of the forward seat. The body may be constructed entirely of wood but it is customary to construct such bodies of metal plates secured upon a wooden frame, as hereinafter more particularly described. The margins of the body portion are trimmed with a bead 14 to enhance the appearance of the vehicle and portions of the body are sometimes divided in the panels by such beads. As heretofore stated it has been found difficult to secure the bead to the body in such a manner as to prevent the enamel from cracking over or around the screws or other fastening devices. To obviate this difficulty and to more securely hold the bead in place, I attach the same in the following manner: The bead is bored at suitable intervals with holes 15 to receive screws and these holes are countersunk with a wide-angled countersink forming conical openings 16, as shown in Fig. 5. The angle of the opening 16 should be greater than the angle or pitch of the head of the screw 17 which is used to fasten the bead to the frame 18 of the body, thus leaving a space under the screw head between said head and the wall of the opening 16, as shown in Figs. 4 and 6. After the bead, thus prepared, has been fastened to the body or door or other part to be trimmed by screws 17, the cavity 16 is filled with solder or other suitable easily fusible metal or alloy 19, the cavity and screw head being first treated with a suitable flux or material to cause the fusible metal to adhere. Sufficient heat is applied to cause the fusible metal to flow around the screw head and completely fill the cavity. When cooled the surplus fusible metal is removed and its surface finished with a file or other tool to conform accurately with the surface of the bead.

As shown in Fig. 4 the screw 17 is symmetrically arranged in the conical cavity 16, thus providing an annular space between the screw head and the wall of said cavity, while in Fig. 6 the screw is inclined, its head resting

on the bead at one side, thus providing a crescent-shaped cavity between the screw head and the bead. It will be observed that in either case the button 19 of fusible metal is anchored to the screw head and cannot fall out even though it should become loose from the bead. The button however will almost invariably adhere permanently to the bead, and perform the function of locking the screw against turning.

As shown in the drawing, the panels are covered with metal plates 20 which are secured at their margins to the frame 18, by screws or other suitable fastenings 21. The beads are then placed over the metal plates and arranged to cover the fastenings 21, thus serving the double purpose of a trimming for the body and for covering the fastenings 21 and preventing them from loosening or dropping out.

I am aware that it has been proposed to cover screw heads with cylindrical or other plugs inserted in the wood above the screw and believe that such devices have been used upon ordinary carriages; but the rough usage to which automobiles are subjected tends to loosen the screws and loosen plugs of this character, thus cracking the enamel and disfiguring the vehicle. It will be understood that the bead or strip used in carrying out my invention is made of metal to which a fusible metal or alloy, such as solder will adhere. I preferably use brass for this purpose. When a bead is put on according to the method herein described and properly finished, the fastenings cannot be detected and the enamel presents a smooth unbroken surface throughout the length of the bead.

Having described my invention what I claim and desire to secure by Letters Patent is,

1. In a vehicle body, the combination with the body, of a metal bead or strip and securing screws passing through said strip into the body, the said strip having countersinks larger than the screw heads, and fusible metal buttons filling said countersinks, for the purpose set forth.

2. In a vehicle body, the combination with the body, of a metal bead or strip and securing screws passing through said strip into the body, the said strip having countersinks larger than the screw heads, and fusible metal buttons filling said countersinks and extending under the screw heads, for the purpose set forth.

3. In a vehicle body, the combination with the body, of a metal bead or strip and securing screws passing through said strip into the body, the said strip having countersinks larger than the screw heads, and fusible metal buttons filling said countersinks and extending under the screw heads and into the slots thereof, for the purpose set forth.

4. In a vehicle, the combination with the body, of a metal bead having countersunk screw holes, screws extending through said holes into the body, the countersinks in the bead having a wider pitch or angle than the pitch of the screw heads and being deeper than said screw heads, whereby spaces are created between the under sides of the screw-heads in the walls of the countersinks, and fusible metal buttons filling said countersinks, including the spaces in and around the screw heads, the said buttons being finished on their outer surface to conform to the beads.

5. In vehicle construction, the combination with the body frame, of metal plates forming a sheathing on said frame, screws passing through the margins of said plates for attaching the plates to the frame, beads covering said screws to hide the same and prevent their displacement, and screws extending through the beads and the plates into the frame, the beads having countersinks to receive the heads of said latter screws, said countersinks having a greater angle or pitch than the screw heads and being filled with fusible metal, whereby all of said parts are securely and permanently connected together, for the purpose set forth.

In testimony whereof I affix my signature in presence of two witnesses.

FRANK J. MOHAN.

Witnesses:
MILTON TIBBETTS,
CLARA DALE.

No. 891,340. PATENTED JUNE 23, 1908.

R. HUFF.

VALVE OPERATING MECHANISM FOR HYDROCARBON ENGINES.

APPLICATION FILED OCT. 1, 1907.

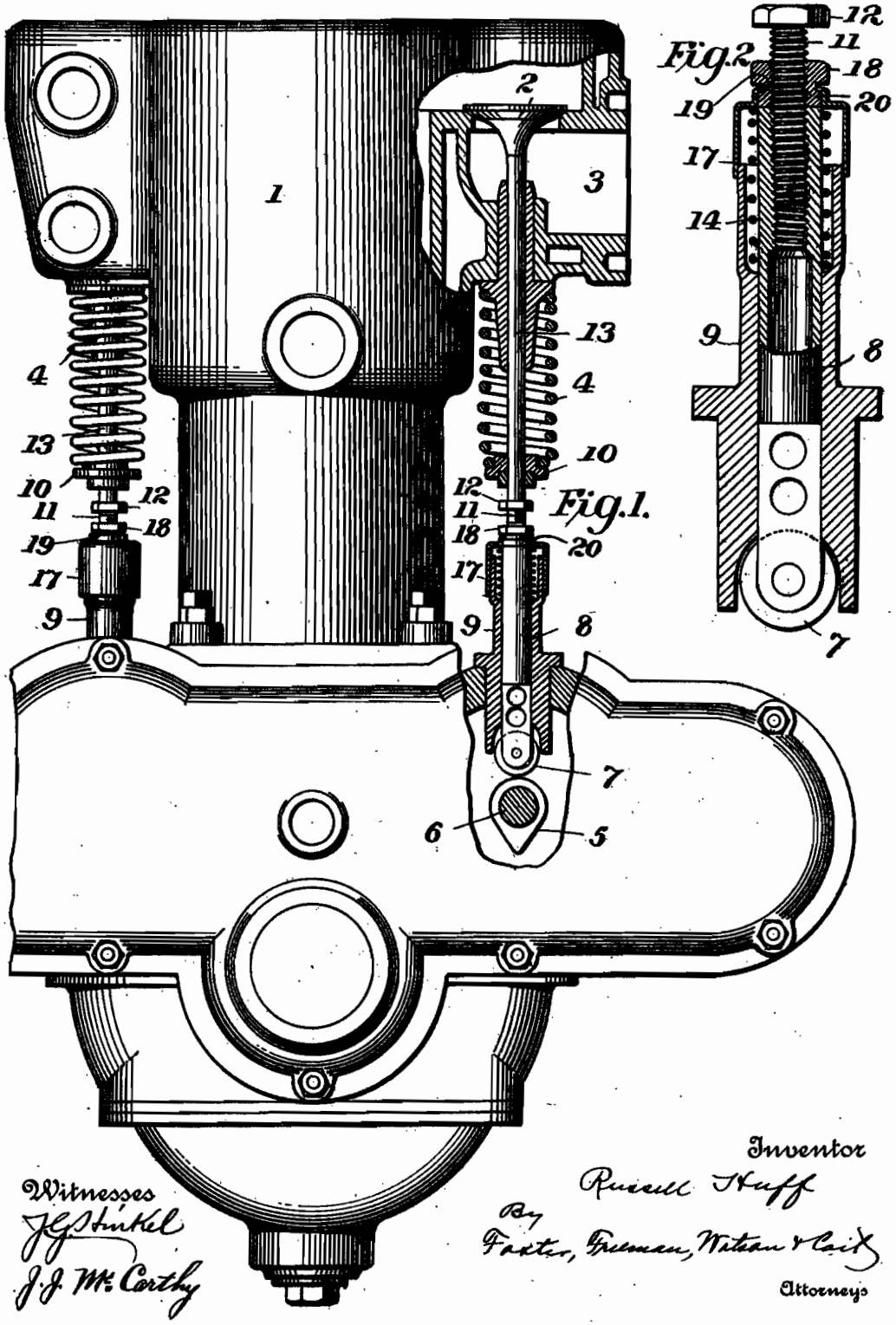

Witnesses
J. G. Stinkel
J. J. McCarthy

Inventor
Russell Huff
By
Foster, Freeman, Watson & Coit
Attorneys

UNITED STATES PATENT OFFICE.

RUSSELL HUFF, OF DETROIT, MICHIGAN, ASSIGNOR TO PACKARD MOTOR CAR COMPANY, OF DETROIT, MICHIGAN, A CORPORATION OF WEST VIRGINIA.

VALVE-OPERATING MECHANISM FOR HYDROCARBON-ENGINES.

No. 891,340. Specification of Letters Patent. Patented June 23, 1908.

Application filed October 1, 1907. Serial No. 395,378.

To all whom it may concern:

Be it known that I, RUSSELL HUFF, a citizen of the United States, and resident of Detroit, county of Wayne, and State of Michigan, have invented certain new and useful Improvements in Valve-Operating Mechanism for Hydrocarbon-Engines, of which the following is a specification.

This invention relates to valve operating mechanism for hydrocarbon explosive engines used on motor vehicles and particularly to the dust-guard which covers the joint between the sliding valve operating rod and the tubular support for it.

In the accompanying drawings, Figure 1 is a view partly in section showing the portion of a hydrocarbon engine having my improvement thereon; Fig. 2 is a sectional view of a portion of the valve operating mechanism including my present improvement.

In this drawing, 1 represents the cylinder of an explosive engine and 2 the valve which regulates the passage of the gases through the opening 3. This valve is normally held to its seat by a spring 4 bearing against the casing and against the washer 10 secured to the valve rod 13. Directly below the lower end of the valve rod 13 and in line therewith is mounted the tubular guide 9. The tubular roller holder or sliding member 8 fits closely the interior of the guide 9 and carries at its lower end the roller 7, which is operated by the cam 5 on the shaft 6. This tubular sliding member is provided with screw threads on its interior at the upper end which receive the screw 11 which is provided at its top with the head 12 which makes contact with the lower end of the valve rod 13. A lock nut 18 is placed upon the screw 11 and is adapted to be screwed down tight against the end of the sliding member 8 and by this means the screw 11 may be adjusted to various heights and locked in any desired position. The upper portion of the nut 18 is provided with angular faces so that it may be turned by means of a wrench and is provided midway its length with an annular groove 19. The part of the nut below this groove marked 20 is made cylindrical in form.

Surrounding the upper end of the guide 9 and making close sliding contact therewith is the tubular dust guard 17 which has its upper end bent inward against the cylindrical portion of the nut and into the groove in the nut. This dust guard is preferably made of sheet metal and its upper portion is spun into the groove and against the cylindrical portion of the nut, thus making a firm and solid connection between the nut and the dust guard. It will be understood that other means for permanently securing the guard to the sides of the nut may be adopted without departing from my invention in its broader aspects and that the particular means above described is merely the one which I prefer and which I regard as having advantages over other means.

Before making the present invention I provided the dust guard with an inturned flange fitting between the nut 18 and the upper end of the sliding member 8 and clamped it firmly in place between these parts. It was found however that the constant adjustment of the mechanism would soon wear away the flange and the dust guard would be useless and it was in seeking to overcome this difficulty that I conceived the construction in which the guard is fastened to the nut permanently above its bottom where it will not be subjected to the wear due to adjustment.

I have shown in the drawing a spring 14 within the guide 9 bearing against the under surface of the dust guard 17, which spring tends to keep the head 12 of the screw 11 in contact with the valve rod, but it is to be understood that this spring is not essential and forms no part of my present invention.

My invention relates primarily to the dust guard and means for supporting it in its relation to the joint between the two sliding parts and it is to be understood that the specific forms of the various parts of the mechanism shown are not essential to the present invention.

Having described my invention what I claim and desire to secure by Letters Patent is,

1. A dust guard for sliding connections consisting of a nut and a tubular metal portion of greater diameter having one end bent inward and permanently secured to the sides of the nut between its ends.

2. A dust guard for sliding connections consisting of a nut provided with a circumferential groove and a tubular metal portion of greater diameter having its end spun into said groove.

3. A dust guard for sliding connections

consisting of a screw threaded nut having on its outer surface a circumferential groove the surface of said nut on one side of said groove being angular and upon the other cylindrical, in combination with a cylindrical metal portion having a diameter greater than the nut and having its end spun down in close contact with the cylindrical portion of the nut and into the groove therein.

4. The combination with a tubular guiding member, of a sliding member mounted therein, an adjustable nut carried by the sliding member beyond the end of the guiding member and being provided with a circumferential groove, and a dust cap closely fitting and slidably engaging the end of the guiding member and having its ends spun into the circumferential groove of the nut.

5. In valve operating mechanism for hydrocarbon engines, the combination with the operating rod of the tubular guiding member through which it slides, an adjustable screw threaded nut mounted on said rod beyond the end of said guiding member and provided with a circumferential groove and a tubular dust guard fitting over the end and for some distance down the sides of the guiding member, the end of said dust guard being spun into the groove in the nut.

6. In valve operating mechanism for hydrocarbon engines, the combination with the tubular supporting operating member, of an adjustable screw threaded rod engaging screw threads within the end of said member, a lock nut on said rod adapted to be screwed down against the end of said supporting member, a tubular guiding member through which the supporting member slides, and a tubular dust guard fitting over the end of the guiding member and permanently secured to the sides of the nut.

In testimony whereof I affix my signature in presence of two witnesses.

RUSSELL HUFF.

Witnesses:
MILTON TIBBETTS,
CLARA DALE.

✓296/87

A. LOOMIS.

WIND SHIELD FOR MOTOR VEHICLES.

APPLICATION FILED OCT. 15, 1907

1,012,670.

Patented Dec. 26, 1911.

2 SHEETS—SHEET 1.

Fig. 2.

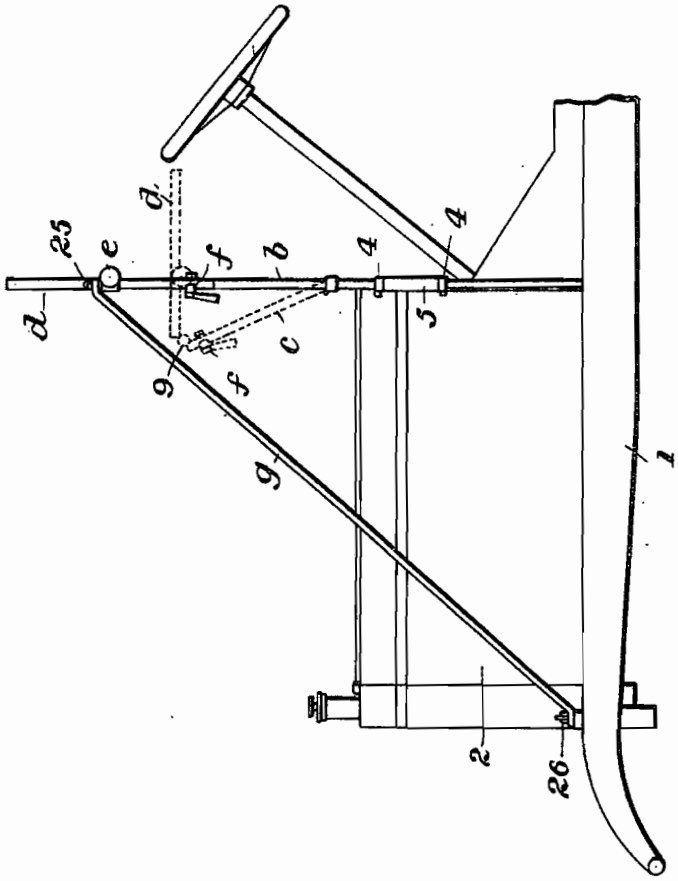

Fig. 1.

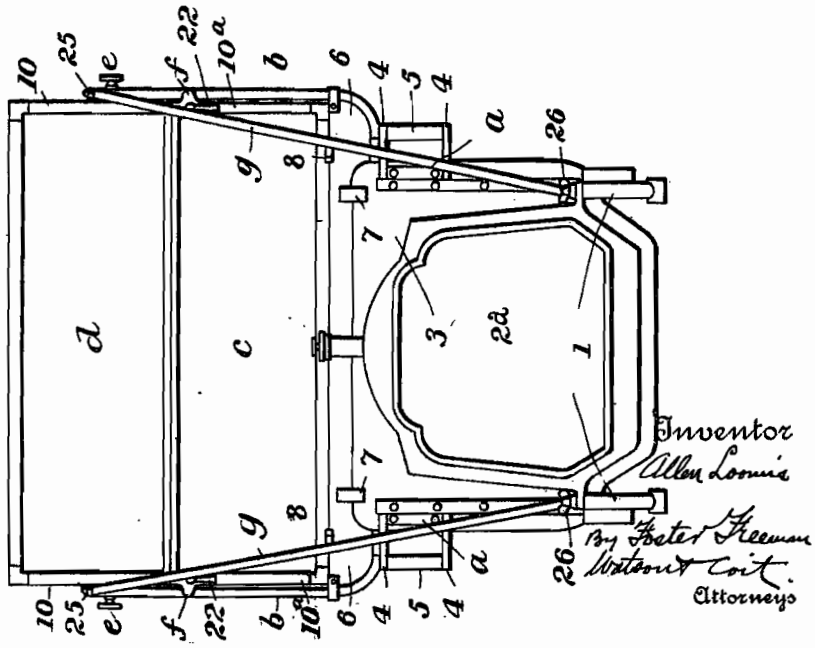

Witnesses

J. G. Stinstel

J. J. McCarthy

Inventor

Allen Loomis

By Foster Freeman

Watson Coit

Attorneys

A. LOOMIS.

WIND SHIELD FOR MOTOR VEHICLES.

APPLICATION FILED OCT. 15, 1907.

1,012,670. Patented Dec. 26, 1911.

2 SHEETS—SHEET 2.

Fig. 3.

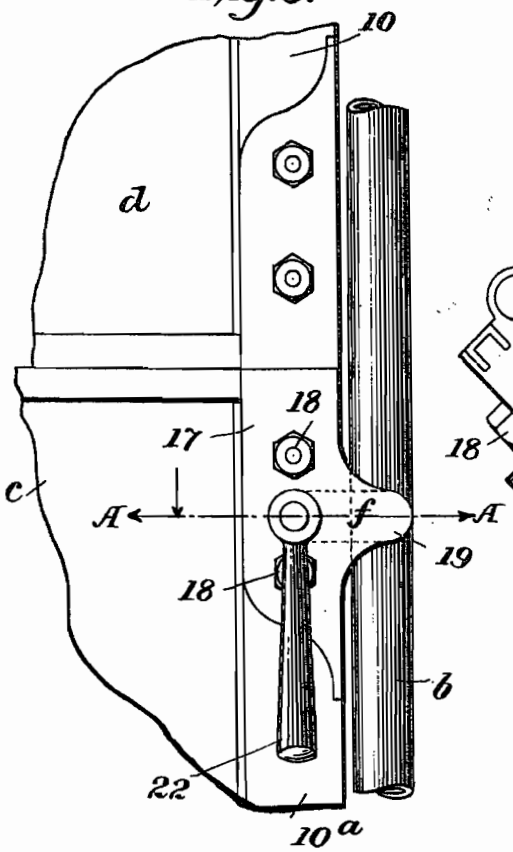

Fig. 5.

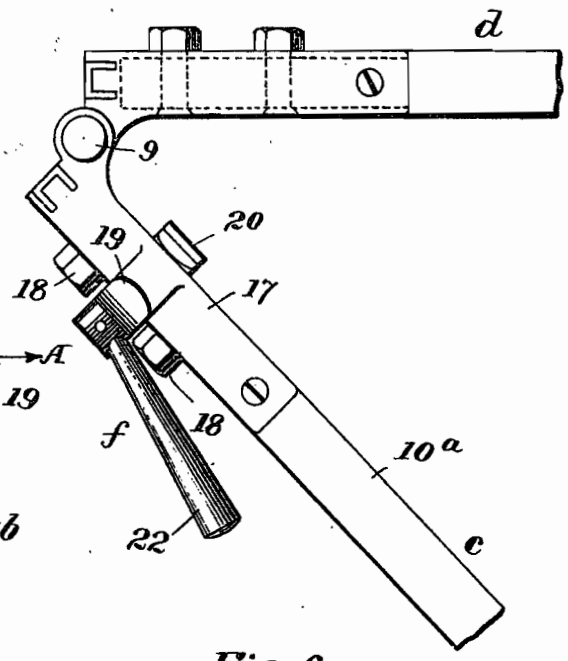

Fig. 4.

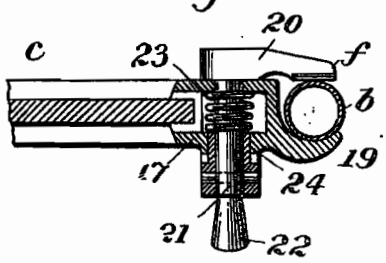

Fig. 6.

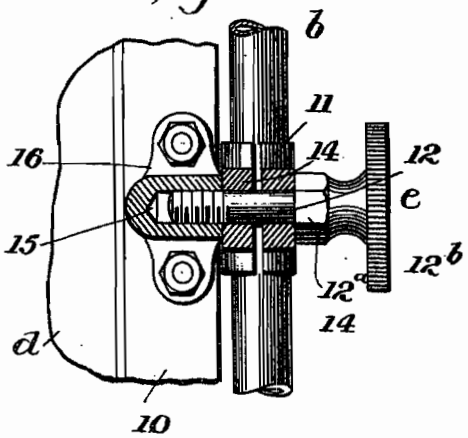

Witnesses

J. G. Stinkel

J. J. McCarthy

Inventor

Allen Loomis

By Foster Freeman Watson & Coe

Attorneys

UNITED STATES PATENT OFFICE.

ALLEN LOOMIS, OF DETROIT, MICHIGAN, ASSIGNOR, BY MESNE ASSIGNMENTS, TO PACKARD MOTOR CAR COMPANY, OF DETROIT, MICHIGAN, A CORPORATION OF MICHIGAN.

WIND-SHIELD FOR MOTOR-VEHICLES.

1,012,670. Specification of Letters Patent. Patented Dec. 26, 1911.

Application filed October 15, 1907. Serial No. 397,573.

To all whom it may concern:

Be it known that I, ALLEN LOOMIS, a citizen of the United States, and resident of Detroit, Wayne county, State of Michigan, have invented certain new and useful Improvements in Wind-Shields for Motor-Vehicles, of which the following is a specification.

This invention comprises improvements in wind shields for automobiles, the details and advantages of which will be pointed out in the following specification, taken in connection with the accompanying drawing, in which,

Figure 1 is a front elevation of the wind shield and part of an automobile; Fig. 2 is a side elevation of the same; Fig. 3 is a front view of portions of the upper and lower panels of the shield, and one of the guide rods, showing one of the clamps for securing the lower panel to the guide rods; Fig. 4 is a section on the line A—A of Fig. 3; Fig. 5 is a side view of two adjacent portions of the upper and lower panels, and Fig. 6 is a detail view, showing one of the adjustable connections between the upper panel and the guide rods.

Referring to the drawing, 1 indicates an automobile frame 2 the engine hood, 2^a the radiator and 3 the dash board of the vehicle. Upon the ends of the dash board are secured a pair of brackets *a*, each having a pair of outwardly projecting arms 4 which are provided with alined openings adapted to receive the lower end portions 5 of metal guide posts or rods *b* of the wind shield. These guide posts are connected, immediately above the parts 5, by a plate or sill 6 which is adapted to rest upon the top of the dash board 3 when the lower end portions of the guide rods are in position in the brackets. Suitable clips 7 may be arranged upon the sill so that they will extend down vertically over the edges of the dash board and prevent vibratory movement of the sill. The wind shield comprises two panels *c* and *d*, the former of which is secured to the upper edge of the sill by hinges 8 which permit said panel to swing forward, as indicated in dotted lines in Fig. 2. The lower edge of the upper panel is connected to the upper edge of the lower panel by hinges 9 which permit the upper panel to fold backwardly with reference to the lower panel, as indicated in dotted lines in Fig. 2. At some distance from the lower edge of the upper panel, the side bars 10 of its frame are swiveled to clamping devices *e* which are adjustable vertically upon the guide rods. One of these adjustable swivel connections is shown in detail in Fig. 6, and it consists of a split clamping sleeve 11 encircling the rod *b*, a clamping screw 12 extends through alined openings in lugs 14 adjacent to the kerf in the sleeve, and into a socket 15 in a fitting 16 which is secured to the side bar 10 of the panel. The threaded end of the screw engages threads in the socket, and it will be seen that by tightening the screw, the lugs 14 on the sleeve will be gripped between the shoulder 12^a on the screw and the fitting 16, so that the sleeve will be clamped to the guide rods, and by loosening the screw the sleeve may be adjusted up and down upon the rod. When the sleeve is moved the panel will turn pivotally on the clamping screw. These screws are provided with large milled heads 12^b, so that they may be conveniently turned by hand.

In Figs. 1 and 2 the two panels are shown in their upright positions in full lines. It will be evident from an inspection of Fig. 2, that when the clamps *e* are moved downward on the guide rods, as shown in dotted lines, the lower panel *c* will swing forwardly until the upper panel reaches the horizontal position, and with a continued downward movement of the clamps the lower panel will swing back into its upright position and the upper panel will fold against the rear side of the lower panel.

By the arrangement thus far described, certain difficulties which arise in the construction of practical folding wind shields are overcome. On an automobile the dash board lights, at the forward side of the shield, and the steering wheel at the rear side, constitute obstructions which it is difficult to clear with a folding shield without cutting away portions of the shield. By my improvements, it will be evident that the panels of the shield may be made of any desired width and that in folding or unfolding the shield it will not engage either the lamps or the steering wheel.

Upon the upper ends of the side bars 10^a of the lower panel clamps *f* are provided for the purpose of securing the shield to the guide posts at or near the joint in the shield when the latter is in its extended position,

so as to brace the shield against wind pressure. One of these clamping devices is illustrated in Figs. 3, 4 and 5, in which 17 indicates a metal corner piece, which forms also one leaf of the hinge 9 and is secured by suitable means, such as the bolts 18, to the side bar 10^a of the lower panel. A curved jaw 19 projects laterally from the corner piece and is adapted to bear against the forward side of the rod *b*. A movable jaw 20 is adapted to engage the rear side of the rod. This jaw is secured to a stud 21 which passes through suitable openings in the part 17 and is journaled therein. A handle 22 is secured to the forward end of the stud and a spring 23 surrounds the stud within the hollow corner piece and bears against a sleeve 24 on the handle. The spring thereby normally presses the jaw 20 toward the jaw 19 so as to grip the rod *b*. The handle 22 is arranged at right angles to the jaw 20 and normally hangs downward, as shown, so that the weight of the handle prevents the jaw from turning. When it is desired to fold the shield the handle is turned so as to move the jaw 20 out of engagement with the guide rod, and when the shield is extended the jaw is moved into engagement with the rod by turning the handle, as will be obvious.

In order to brace the guide rods against wind pressure brace rods *g* are secured to the tops of the rods by suitable bolts 25, and these rods extend downwardly and forwardly to a fixed part of the machine, where they are detachably secured. In the drawing the lower ends of the rods are connected to bolts which pass through the vehicle frame and through lugs which support the radiator, suitable wing-nuts 26 being provided upon the bolts so that the rods may be easily detached therefrom. When it is desired to remove the radiator to obtain better access to the engine the brace rods may be disconnected from the vehicle frame and swung to one side, turning pivotally about the bolts 25. After loosening the brace rods the entire shield and connected parts may, if desired, be removed by lifting the guide rods *b* out of the brackets *a*. It will be noted that the lower end portions 5 of the guide rods, when in the brackets, serve as handles for convenience in getting in and out of the vehicle.

What I claim is,—

1. A wind shield arranged for connection to vehicles comprising a lower panel hinged to suitable supporting means and adapted to swing forwardly, an upper panel hinged to the top of the lower panel and adapted to swing backwardly with reference to the lower panel, guide rods at the ends of the panels, and means for adjustably securing said panels to the rods.

2. A wind shield arranged for connection to vehicles comprising a lower panel hinged to suitable supporting means and adapted to swing forwardly, an upper panel hinged to the top of the lower panel and adapted to swing backwardly with reference to the lower panel, guide rods at the ends of the panels, devices adjustable vertically on said rods and pivotal connections between said devices and the ends of the upper panel.

3. A wind shield arranged for connection to vehicles comprising a lower panel hinged to suitable supporting means and adapted to swing forwardly, an upper panel hinged to the top of the lower panel and adapted to swing backwardly with reference to the lower panel, guide rods at the ends of the panels, clamps adjustable vertically on said rods and pivotal connections between said clamps and the ends of the upper panel.

4. A wind shield arranged for connection to vehicles comprising a suitable sill or base, a lower panel hinged to said base and adapted to swing forwardly, an upper panel hinged to the lower panel and adapted to swing backwardly with reference to the lower panel, guide rods at the ends of said panels, vertically adjustable clamping devices on said rods, and pivotal connections between the ends of said upper panel and said devices.

5. A wind shield arranged for connection to vehicles comprising guide rods, a sill or base connecting the lower end portions of said rods, a lower panel hinged to said sill and adapted to swing forwardly, an upper panel hinged to the lower panel and adapted to swing backwardly with reference to the lower panel, devices adjustable vertically on the rods and pivotal connections between said devices and the ends of the upper panel.

6. A wind shield arranged for connection to vehicles comprising guide rods, a lower panel hinged to suitable supporting means and adapted to swing forwardly, an upper panel hinged to the lower panel and adapted to swing backwardly with reference to the lower panel, means for locking said panels to the rods at or near the joint between said panels, devices adjustable vertically on the rods and pivotal connections between said devices and the ends of the upper panel.

7. A wind shield arranged for connection to vehicles comprising guide rods, a lower panel hinged to suitable supporting means and adapted to swing forwardly, an upper panel hinged to the lower panel and adapted to swing backwardly with reference to the lower panel, clamps or locking devices on the ends of the lower panel for locking the latter to the rods, devices adjustable vertically on the rods and pivotal connections between said devices and the ends of the upper panel.

8. A wind shield arranged for connection

to vehicles comprising guide rods, a lower panel hinged to suitable supporting means and adapted to swing forwardly, an upper panel hinged to the lower panel and adapted to swing backwardly with reference to the lower panel, clamps or locking devices on the ends of the lower panel for locking the latter to the rods, clamps adjustable vertically on the rods, and pivotal connections between said latter clamps and the ends of the upper panel.

9. In a wind shield for vehicles, a pair of guide rods, a lower panel hinged to the vehicle and adapted to swing forwardly, an upper panel hinged to the lower panel and adapted to swing backwardly with reference to the lower panel, split clamping sleeves on said rods, fittings, having threaded sockets, at the ends of the upper panel, and clamping screws extending through openings in the sleeves and into said sockets.

10. In a wind shield for vehicles, a pair of guide rods, a lower panel hinged to suitable supporting means and adapted to swing forwardly, an upper panel hinged to the lower panel and adapted to swing backwardly with reference to the lower panel, vertically adjustable pivotal connections between the ends of the upper panel and the rods, and means for locking the lower panel to the rods comprising jaws fixed to the ends of the lower panel and adapted to bear against the forward sides of the rods, and spring jaws pivotally mounted on the rear side of said lower panel and adapted to engage the rear sides of the rods.

11. In a wind shield for vehicles, a pair of guide rods, a lower panel hinged to suitable supporting means and adapted to swing forwardly, an upper panel hinged to the lower panel and adapted to swing backwardly with reference to the lower panel, vertically adjustable pivotal connections between the ends of the upper panel and the rods, and means for locking the lower panel to the rods comprising jaws fixed to the ends of the lower panel and adapted to bear against the forward sides of the rods, spring jaws pivotally mounted on studs passing through the panel frame and adapted to engage the rear sides of the rods, and handles for turning said spring jaws, said handles being secured to the studs and extending at angles to the spring jaws.

12. A wind shield arranged for connection to motor vehicles comprising a lower panel hinged to a suitable support, an upper panel hinged to the lower panel, upright guide rods at the ends of the panels and connections between said guide rods and intermediate points of the ends of the upper panel, said connections being adapted to slide on the guide rods and pivotally support the upper panel, for the purpose set forth.

13. A wind shield arranged for connection to motor vehicles comprising a lower panel hinged to a suitable support, an upper panel hinged to the lower panel, upright guide rods at the ends of the panels, connections between said guide rods and intermediate points of the ends of the upper panel, said connections comprising clamps slidably mounted on the guide rods, and pivots carried by said clamps for pivotally supporting the upper panel.

14. A wind shield arranged for connection to motor vehicles comprising a lower panel hinged to a suitable support, an upper panel hinged to the lower panel, upright guide rods at the ends of the panels, connections between said guide rods and intermediate points of the ends of the upper panel, said connections including pivotal support for the upper panel, clamps slidably mounted on the guide rods and carrying said pivotal supports, and means for tightening said clamps and securing the upper panel thereto in any desired position.

15. A wind shield arranged for connection to motor vehicles comprising a lower panel hinged at its lower end to a suitable support, an upper panel pivotally connected to the lower panel, vertically adjustable supports pivotally connected to intermediate portions of the ends of the upper panel, and means for sustaining said supports in any desired adjustment.

16. A wind shield arranged for connection to motor vehicles comprising a lower panel, an upper panel suitably hinged to the lower panel, and vertically adjustable pivotal supports connected to intermediate portions of the ends of one of said panels, whereby said panels may be adjusted into the same plane, or into parallel planes, or to different angles with respect to each other.

17. A wind shield arranged for connection to motor vehicles comprising a support, a device adjustable relative thereto, two panels, a hinge connecting said panels, a pivot connecting one panel with the support and a pivot connecting the other panel with said device, said pivots being arranged at unequal distances from said hinge.

18. A wind shield arranged for connection to motor vehicles comprising a support, a device adjustable relative thereto, two panels, a hinge connecting said panels, a pivot connecting one panel with the support and a pivot connecting the other panel with said device, said former pivot being arranged farther from said hinge than said latter pivot.

19. A wind shield arranged for connection to motor vehicles comprising a support, a lower panel hinged thereto, an upper panel hinged to the lower panel, guide rods at the ends of the panels, a device adjustable longitudinally of said rods and piv-

oted to the ends of said upper panel at points nearer the hinge between the panels than is the lower hinge.

20. A wind shield arranged for connection to vehicles comprising a lower panel hinged to suitable supporting means, an upper panel approximately the same height as the lower panel and hinged thereto, guides, and devices having adjustable sliding connection with said guides and pivoted to the ends of the upper panel below the upper edge thereof.

21. A wind shield for vehicles comprising a support, a lower panel pivoted thereto, an upper panel pivoted to said lower panel and adapted to fold against said lower panel, and means for guiding said upper panel and having pivotal connection therewith so that the swinging of said upper panel in either direction will cause a to and fro movement of said lower panel about its pivot.

22. A wind shield for vehicles comprising a support, a lower panel pivoted thereto, an upper panel pivoted to said lower panel and adapted to fold against the lower panel, and sliding means for guiding said upper panel and having pivotal connection therewith so that the swinging of said upper panel in either direction will cause a to and fro movement of said lower panel about its pivot.

23. A wind shield for vehicles comprising a support and guide, a lower panel pivoted to said support, an upper panel pivoted to said lower panel, guiding means for said panels, having a pivotal connection with said upper panel and adjustable sliding connection with said guide, constructed so that the swinging of said upper panel will cause a to and fro swinging movement of said lower panel about its pivot.

24. A vehicle wind shield comprising upper and lower panels hinged together, pivotal means for connecting the lower panel with a support, and a device adapted for connection with the vehicle and having means connecting it with the upper panel between its hinge and its free edge, whereby the swinging of the upper panel in either direction will cause a to and fro swinging movement of the lower panel.

25. A vehicle wind shield comprising upper and lower panels hinged together, pivotal means for connecting the lower panel with a support, and devices having pivotal connection with the opposite ends of the windshield and adapted to be connected with the vehicle, whereby the swinging of the upper panel in either direction will cause a to and fro swinging movement of the lower panel.

In testimony whereof I affix my signature in presence of two witnesses.

ALLEN LOOMIS.

Witnesses:
MILTON TIBBETTS,
CLARA DALE.

Copies of this patent may be obtained for five cents each, by addressing the "Commissioner of Patents, Washington, D. C."

1115698 Sept 15 1908

No. 890,654. PATENTED JUNE 16, 1908.

R. HUFF.

MOTOR VEHICLE.

APPLICATION FILED OCT. 21, 1907.

2 SHEETS—SHEET 1.

Fig. 1

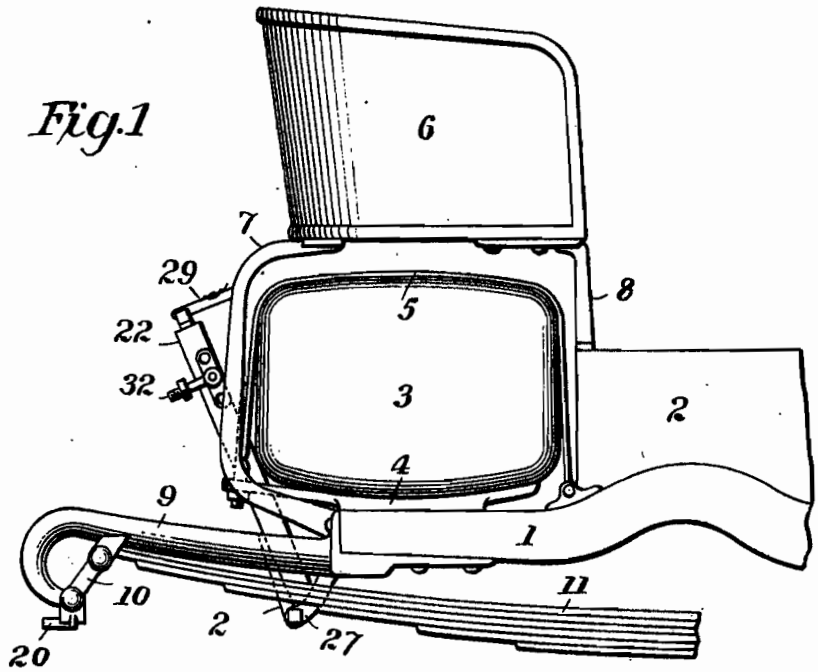

Fig. 2.

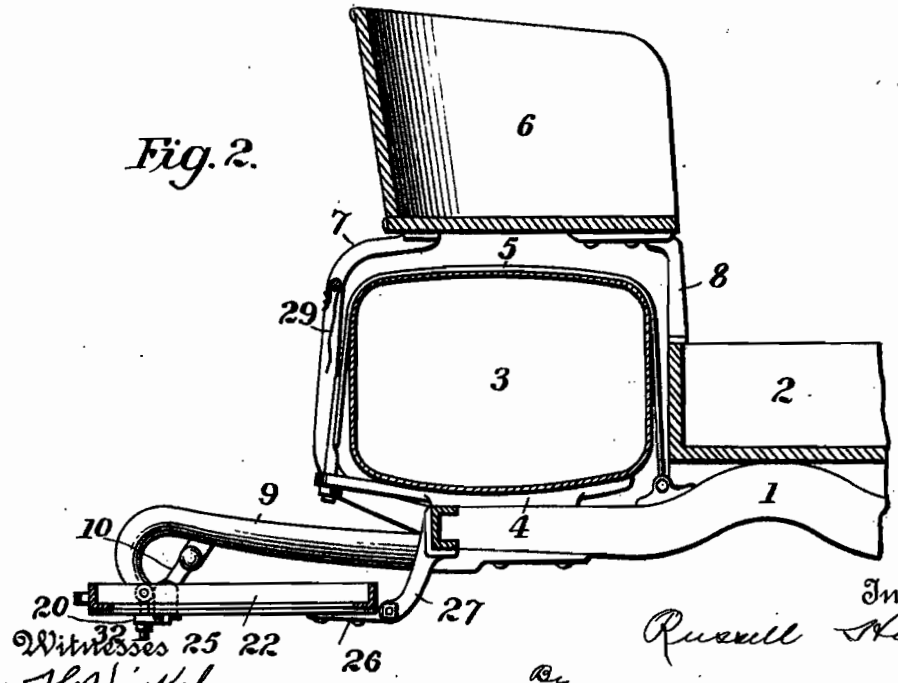

Witnesses
J. G. Hinkel
J. J. McCarthy

Inventor
Russell Huff
By
Foster, Freeman, Watson & Coit
Attorneys

No. 890,654. PATENTED JUNE 16, 1908.

R. HUFF.

MOTOR VEHICLE.

APPLICATION FILED OCT. 21, 1907.

2 SHEETS—SHEET 2.

Fig. 3

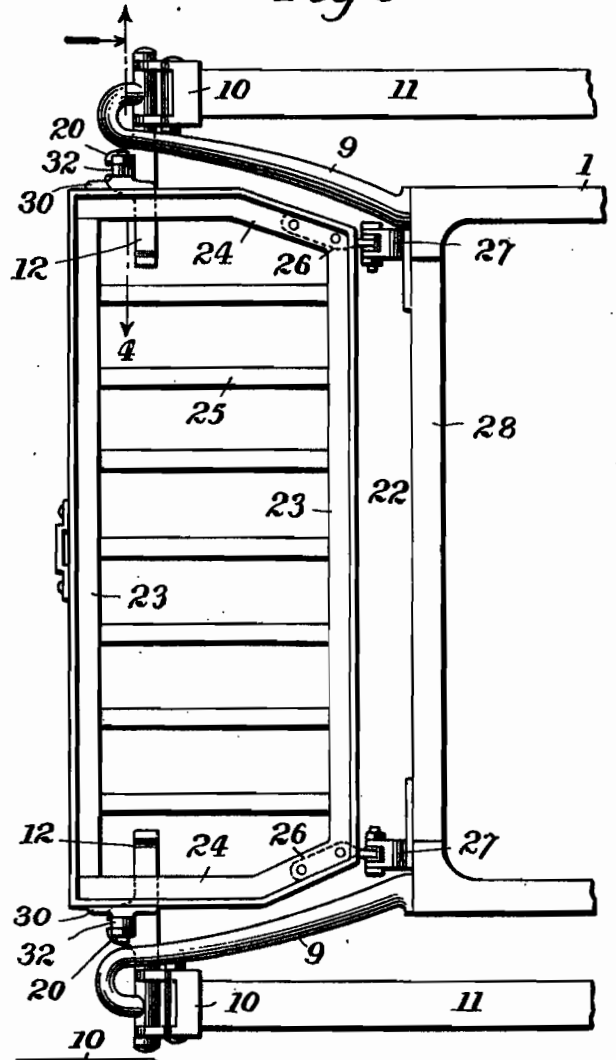

Fig. 4.

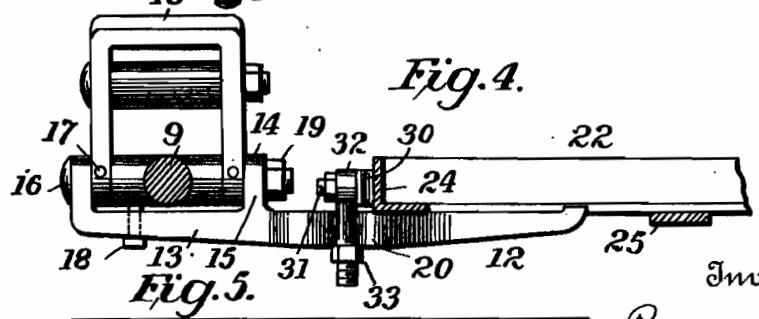

Fig. 5.

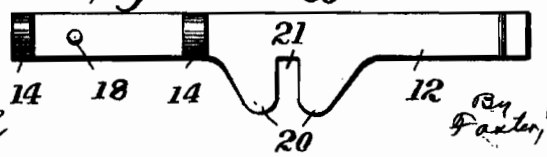

Witnesses

J. G. Tinkel

J. J. McCarthy

Inventor

Russell Huff

By Foster, Freeman, Watson & Coit

Attorneys

UNITED STATES PATENT OFFICE.

RUSSELL HUFF, OF DETROIT, MICHIGAN, ASSIGNOR TO PACKARD MOTOR CAR COMPANY, OF DETROIT, MICHIGAN, A CORPORATION OF WEST VIRGINIA.

MOTOR-VEHICLE.

No. 890,654. Specification of Letters Patent. Patented June 16, 1908.

Application filed October 21, 1907. Serial No. 398,451.

To all whom it may concern:

Be it known that I, RUSSELL HUFF, a citizen of the United States, residing at Detroit, Wayne county, in the State of Michigan, have invented certain new and useful Improvements in Motor-Vehicles, of which the following is a specification.

The present invention relates to motor vehicle construction, and particularly to baggage racks adapted to be attached to the rear portion of such vehicles.

It is particularly designed for use on motor vehicles of the runabout type in which a tiger seat is carried on the extreme rear portion, and in which steps are provided on both sides of the frame of the vehicle for the purpose of facilitating reaching said seat. It is to be understood however that the invention is not limited to this particular use, and that its features of construction are applicable to other types of motor vehicle.

The objects and advantages of the invention will be apparent from the following description.

In the accompanying drawings—Figure 1 is a side elevation of the rear portion of the motor vehicle embodying the invention, the baggage rack being shown in its elevated position; Fig. 2 is a sectional view of what is shown in Fig. 1, the baggage rack in this instance being shown in its lowered position; Fig. 3 is a plan view of the baggage rack and contiguous parts of the vehicle; Fig. 4 is an enlarged elevation of one of the steps which support the baggage rack, showing part of that rack in section; and Fig. 5 is a plan view of the step disconnected from its attached parts.

Referring to the drawings 1 represents the rear portion of the vehicle frame and 2 the body supported thereon.

3 is a gasolene tank supported on the rear portion of the frame 1 on brackets 4 and held in position by straps 5. Above said tank is supported the tiger seat 6 on brackets 7 and 8 mounted on the frame and body respectively. Extending rearwardly from each side of the frame is a suitably curved spring hanger 9, the end of which is connected by a shackle 10 with the end of the rear spring 11. The above are of well known design and construction and need not be further described.

There is hung from the ends of each spring hanger 9 a bracket or step 12 of any suitable form, the one shown having a straight body portion 13 and on one end thereof two upwardly extending spaced ears 14 provided with eyes 15 through which the bolt 16 connecting the hanger with the shackle passes. These brackets extend inwardly from the springhanger and in the runabout type of vehicle are made in the form of steps so that they may be used as a means for enabling the occupant of the vehicle to reach the tiger seat. In the present instance the bolt 16 which connects the hanger to the shackle is keyed by means of pins 17 to the shackle, and the step is keyed by means of bolt 18 to the hanger, as will be clearly seen by reference to Fig. 4. The key connection between the shackle and the bolt makes those parts move together and consequently the bolt turns in the long bearing surface in the end of the hanger, and furthermore the bolt is prevented from working loose and being lost. A nut 19 on the end of the bolt acts as an additional means for holding it in place.

The key connection between the step and the spring hanger made by means of the bolt 18 serves to keep the step in a fixed relation to the body of the vehicle and in a substantially horizontal position. The step 12 is further provided at a point between its ends with two laterally extending spaced lugs 20 providing a notch 21 between them for a purpose hereinafter specified. The steps 12 on each side of the vehicle are identical, and therefore the above description of one of them will suffice for both.

The baggage rack 22 is composed of longitudinal angle iron side pieces 23, angle iron end pieces 24, and intermediate transversely extending spaced straps 25, all of which are riveted together to form a rigid steel frame suitable for supporting a trunk or baggage of any description. This rack is provided at one side with hinge pieces 26 by which it is pivotally connected to brackets 27 attached to the rear cross beam 28 of the vehicle frame. By this connection the rack may be held in the folded position shown in full lines in Fig. 1 against the rear portion of the vehicle by a strap 29, or it may be dropped to the lowered position shown in Fig. 2, in which position the end portions of the rack rest upon the steps 12 hereinbefore described. Mounted on each of the end pieces 24 is a bracket 30 provided with a horizontally extending pivot pin 31 from which is suspended

an eye bolt 32 provided with a nut 33. When the rack is in its lowered position as shown in Fig. 2, in plan in Fig. 3 and in section in Fig. 4, the said bolt 32 is adapted to enter the notch 21 between the lugs 20 of the steps, and upon tightening the nut 33 the rack is rigidly secured to the step whereby it is securely held in its lowered position.

Having described my invention, what I claim and desire to secure by Letters Patent is—

1. In a motor vehicle, the combination with the frame, of a baggage rack pivotally attached to the rear part thereof, and steps attached to the spring hangers for supporting said rack.

2. In a motor vehicle, the combination with the frame, of a baggage rack pivotally attached to the rear part thereof, steps attached to the spring hangers for supporting said rack, and means for clamping said rack to the steps to hold it in position.

3. In a motor vehicle, the combination with the frame, of a baggage rack pivotally attached to the rear part thereof, and steps attached to the spring hangers for supporting said rack, said steps being provided with side notches and pivoted bolts on said rack adapted to fit in said notches and clamp the parts in position.

4. In a motor vehicle, the combination with the frame, of a baggage rack pivotally supported between the spring hangers of the frame, and steps extending horizontally inward from the ends of the hangers whereby the rack can be raised on its pivotal support up against a part of the vehicle and will rest on the steps when in its lowered position.

5. A step for the rear spring hanger of motor vehicles comprising a main body portion, spaced upwardly extending ears thereon provided with eyes to receive the pin of the spring hanger, and a bolt adapted to engage the hanger and key the step thereto.

6. A step for the rear spring hanger of motor vehicles, comprising a main body portion having a notch in one side, spaced upwardly extending ears thereon near one end provided with eyes to receive the pin of the spring hanger, and a bolt adapted to engage the hanger and key the step thereto.

7. In a motor vehicle, the combination with the rear spring hanger, of a shackle for connecting its end with the end of the spring, a bolt passing through said hanger and shackle, means for keying said bolt to the shackle, a step having spaced ears provided with eyes through which said bolt passes, and a bolt for keying said step to the hanger to maintain it in a horizontal position.

8. In a motor vehicle, the combination with the frame, of a baggage rack pivotally attached to the rear part thereof, and brackets attached to the spring hangers for supporting said rack.

In testimony whereof I affix my signature in presence of two witnesses.

RUSSELL HUFF.

Witnesses:
MILTON TIBBETTS,
CLARA I. DALE.

No. 896,112. PATENTED AUG. 18, 1908.

R. HUFF.

STARTING DEVICE FOR HYDROCARBON ENGINES.

APPLICATION FILED NOV. 30, 1907.

2 SHEETS—SHEET 1.

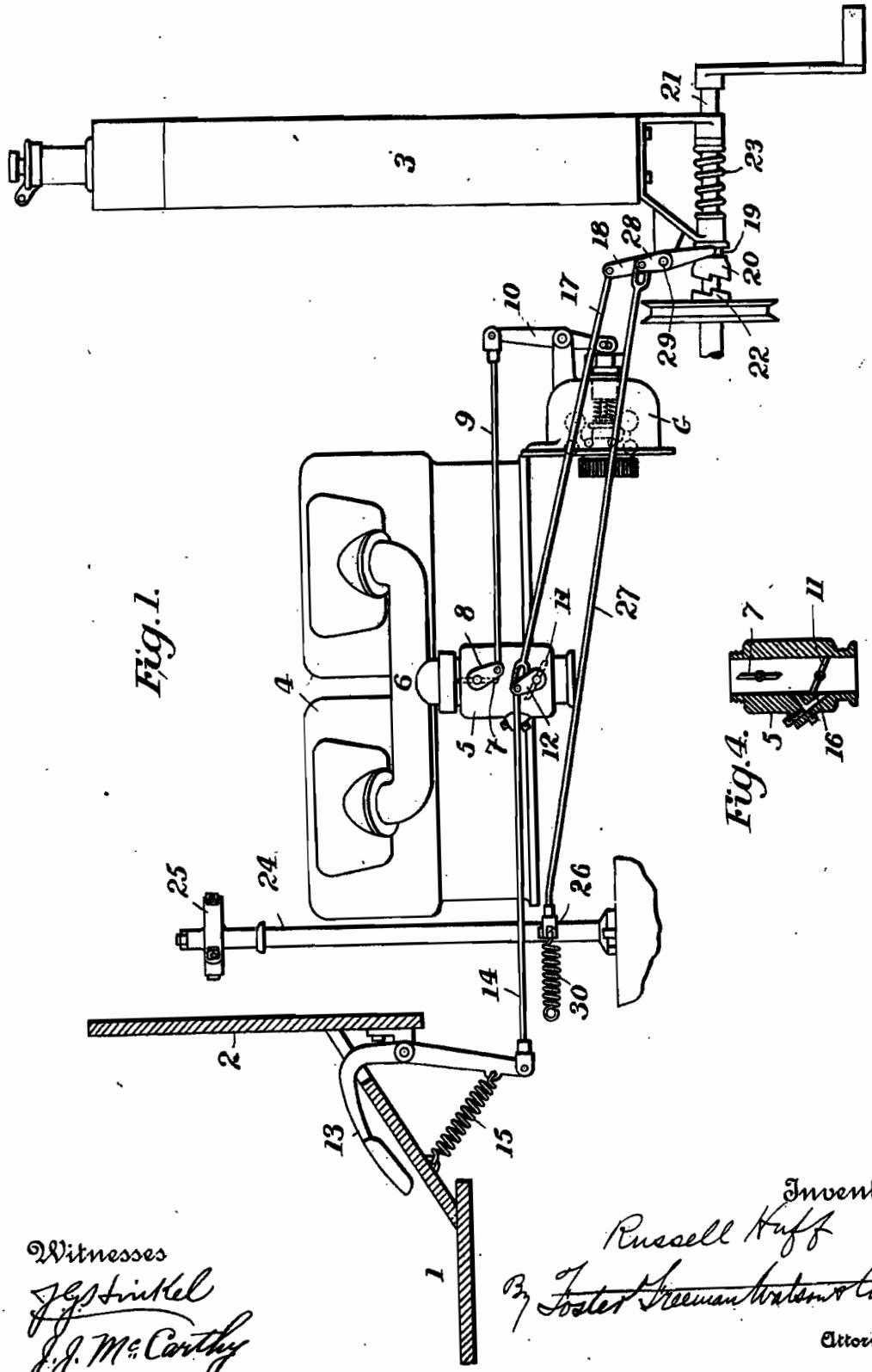

Witnesses

J. G. Stinkel

J. J. McCarthy

Inventor

Russell Huff

By Foster Freeman Watson & Coit

Attorneys

No. 896,112. PATENTED AUG. 18, 1908.

R. HUFF.

STARTING DEVICE FOR HYDROCARBON ENGINES.

APPLICATION FILED NOV. 30, 1907.

2 SHEETS—SHEET 2.

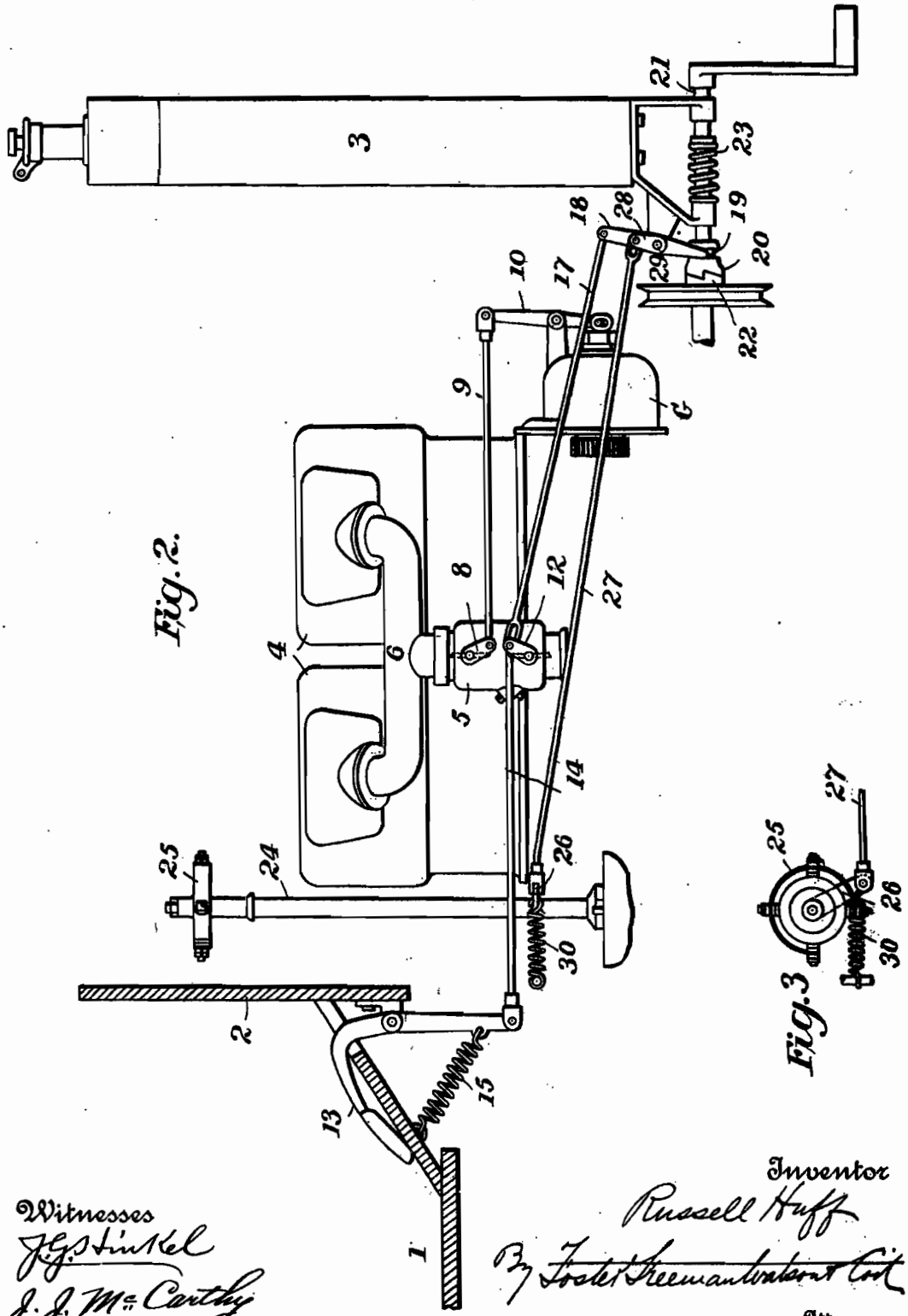

Witnesses
J. G. Stinkel
J. J. McCarthy

Inventor
Russell Huff
By Foster Freeman Watson & Coit
Attorneys

UNITED STATES PATENT OFFICE.

RUSSELL HUFF, OF DETROIT, MICHIGAN, ASSIGNOR TO PACKARD MOTOR CAR COMPANY, OF DETROIT, MICHIGAN, A CORPORATION OF WEST VIRGINIA.

STARTING DEVICE FOR HYDROCARBON-ENGINES.

No. 896,112. Specification of Letters Patent. Patented Aug. 18, 1908.

Application filed November 30, 1907. Serial No. 404,522.

To all whom it may concern:

Be it known that I, RUSSELL HUFF, a citizen of the United States, and resident of Detroit, Wayne county, State of Michigan, have invented certain new and useful Improvements in Starting Devices for Hydrocarbon-Engines, of which the following is a specification.

This invention relates to improvements in motor vehicles and more particularly to means for opening the throttle and retarding the spark while starting the motor, whereby the possibility of "back kicking" of the starting crank is precluded.

The invention will be described in connection with the accompanying drawing, in which,

Figure 1 is a side elevation of so much of the motor mechanism of the vehicle as is necessary to illustrate the invention, the parts being shown in the position which they assume when the vehicle is not running or running slowly; Fig. 2 is a similar view showing the parts in the position assumed when the engine is being cranked; Fig. 3 is a diagram of the commutator; Fig. 4 is a section through the mixture inlet pipe showing the valves therein.

Referring to the drawing, 1 indicates the body of a motor vehicle, 2 the dash-board, 3 the radiator, 4 the cylinder casings of the engine, and 5 the inlet pipe which is provided with branches 6 leading to the cylinders within the casings 4. Within the mixture pipe 5 is a valve 7 which is connected through arm 8, link 9 and lever 10 with a governor G. The valve 7, which is of any suitable structure, stands normally open. When, however, the motor starts the governor shifts the lever 10 closing this valve more or less, depending upon the speed of the engine. As shown the valve 7 is beyond the control of the driver of the vehicle and in some classes of vehicles this is a desirable feature as the governor can be so adjusted as to close the valve when the motor reaches a prescribed limit, thus preventing the driver from exceeding the speed limit at which the governor is set. In the inlet pipe is also arranged a valve 11 which is operated by an arm 12. The arm 12 is connected with the usual accelerator pedal 13 by means of a link 14 and a spring 15 holds the pedal in its elevated position and the valve 11 normally closed. A by-pass 16 is provided whereby sufficient mixture is permitted to enter the motor to operate it at ordinary speeds while the valve 11 is closed.

A link 17 is connected at one end with the arm 12 by a pin-and-slot connection and at the other end it is pivotally connected with one arm of a rocking lever 18, the other arm of said lever being engaged with an annular groove 19 on the clutch member 20 of the starting crank 21 by means of which the engine is cranked. In starting the motor it is desirable to have the valves in the mixture inlet pipe wide open so that an ample supply of mixture can pass to the motor. By the arrangement above described the valve 11 is moved from its closed position, as shown in Figs. 1 and 4, to its open position, as shown in Fig. 2, when the crank is moved inward to its operative position, shown in Fig. 2. As the valve 7 stands normally wide open when the motor is stopped, it will be seen that both valves are open during the cranking operation. When through cranking, the clutch member 20 is automatically withdrawn from its complementary clutch member 22 by the spring 23 and the valve 11 is closed by the spring 15. The pin-and-slot connection between the arm 12 and the link 17 permits the accelerator pedal 13 to be operated at any time without disturbing the cranking clutch 20. It is also desirable to retard the spark while cranking to prevent premature explosion and for this reason I connect the rocking post 24 which carries the commutator 25 with the starting crank 21. As shown, this connection is accomplished by means of an arm 26 on the post, link 27 and arm 28 on the rock shaft 29 which carries the lever 18. A spring 30 holds the commutator in its normal position and a pin-and-slot connection between the link 27 and the arm 28 permits of the usual adjustment of the commutator without disturbing the crank shaft.

It will be seen that before the crank can be operated to turn the engine the throttle valve 11 must be opened and the commutator arranged to retard the spark, under which conditions a premature explosion resulting in a back kick is practically impossible and it will also be evident that I accomplish these results without in any way interfering with the normal operation of the engine and its usual controlling means.

Having described my invention what I claim and desire to secure by Letters-Patent, is,

1. In controlling means for motor vehicles, the combination with the mixture inlet pipe and a throttle valve therein, of a starting crank for the engine and connections between the starting crank and the throttle valve whereby the latter is opened when the crank is moved to operative relation with the engine.

2. In controlling means for motor vehicles, the combination with the mixture inlet pipe and the throttle valve thereof, of a starting crank, a clutch for connecting the starting crank with the engine, means for normally holding the clutch open, means for normally holding the said throttle valve closed, and a connection between the throttle valve and the starting crank, whereby the former is opened when the latter is moved to operative position.

3. In controlling means for motor vehicles, the combination with the mixture inlet pipe and the throttle valve thereof, of a starting crank, a clutch for connecting the starting crank with the engine, means for normally holding the clutch open, means for normally holding the said throttle valve closed, a connection between the throttle valve and the starting crank, whereby the former is opened when the latter is moved to operative position, said connection comprising a lever engaging the shaft of the starting crank, an arm on the valve, and a link connecting said lever and said arm.

4. In controlling means for motor vehicles, the combination with the mixture inlet pipe and the throttle valve thereof, of a starting crank, a clutch for connecting the starting crank with the engine, means for normally holding the clutch open, means for normally holding the said throttle valve closed, a connection between the throttle valve and the starting crank, whereby the former is opened when the latter is moved to operative position, said connection comprising a lever engaging the shaft of the starting crank, an arm on the valve, and a link connecting said lever and said arm, the said link having a pin-and-slot connection with one of said parts.

5. In controlling means for motor vehicles, the combination with the mixture inlet pipe, of a throttle valve in said pipe, an accelerator pedal connected to said valve, and a starting crank also connected to said valve, the said valve being adapted to be opened either by the accelerator pedal or the starting crank.

6. In controlling means for motor vehicles, the combination with the mixture inlet pipe, the throttle valve therein, and the commutator, of a starting crank, and connections between said starting crank and said throttle valve and commutator respectively, whereby the throttle valve is opened and the spark retarded during the cranking of the engine.

7. In controlling means for motor vehicles, the combination with the mixture inlet pipe, the throttle valve therein and the commutator, of a starting crank, and pin-and-slot connections between said starting crank and said throttle valve and commutator respectively, whereby the throttle valve is opened and the spark retarded during the cranking of the engine.

In testimony whereof I affix my signature in presence of two witnesses.

RUSSELL HUFF.

Witnesses:
MILTON TIBBETTS,
CLARA I. DALE.

No. 893,502. PATENTED JULY 14, 1908.

R. HUFF.

MOTOR VEHICLE.

APPLICATION FILED DEC. 18, 1907.

2 SHEETS—SHEET 1.

Fig. 1.

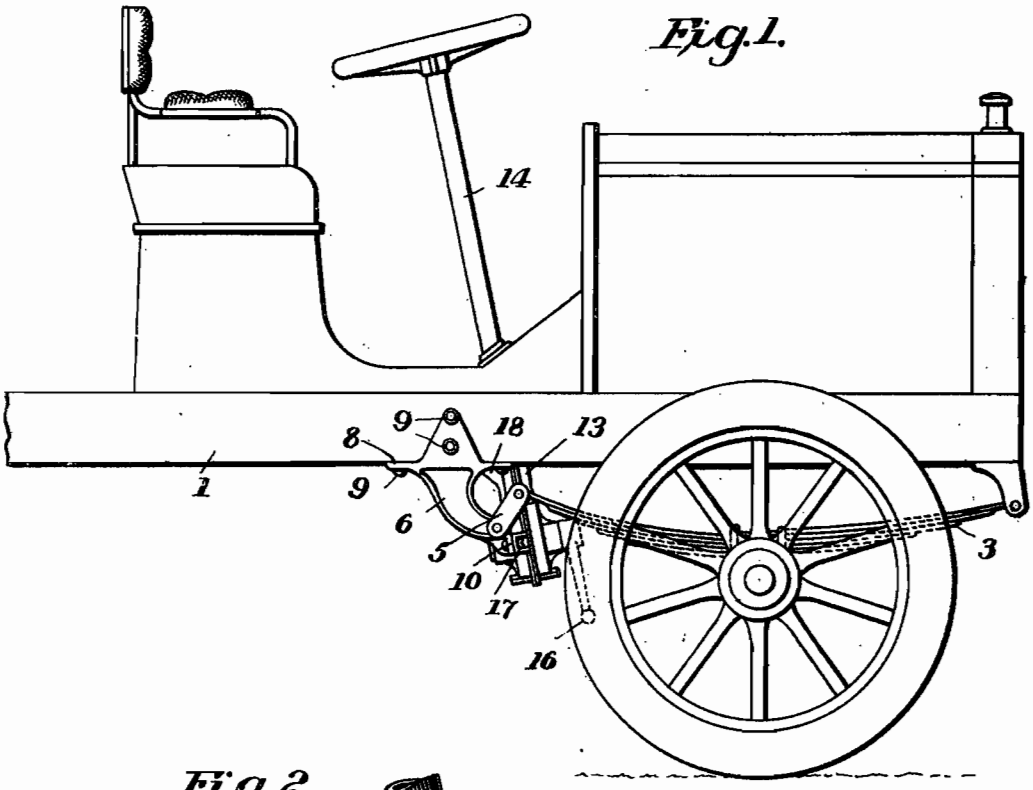

Fig. 2.

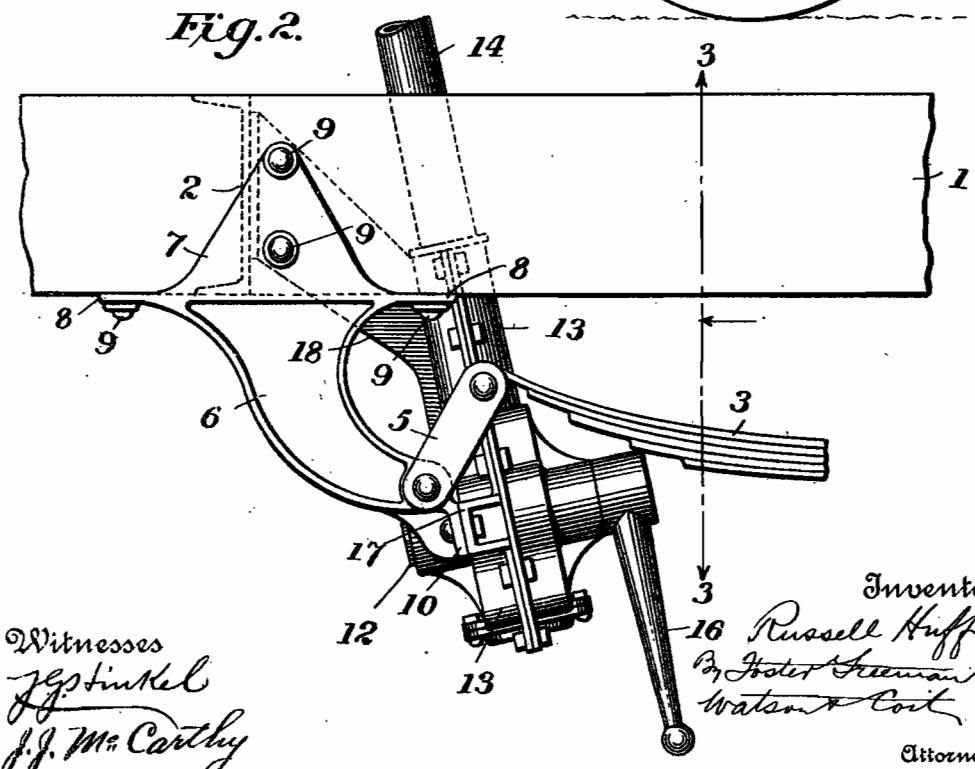

Witnesses
J. J. Stinkel
J. J. McCarthy

Inventor
Russell Huff
By Foster Freeman
Watson & Coit
Attorneys

No. 893,502. PATENTED JULY 14, 1908.

R. HUFF.

MOTOR VEHICLE.

APPLICATION FILED DEC. 18, 1907.

2 SHEETS—SHEET 2.

Fig. 3.

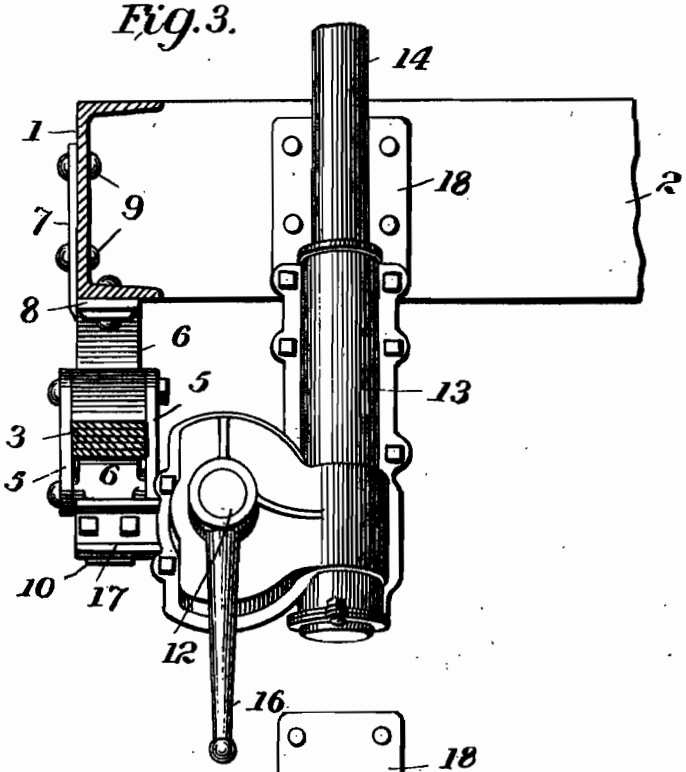

Fig. 4.

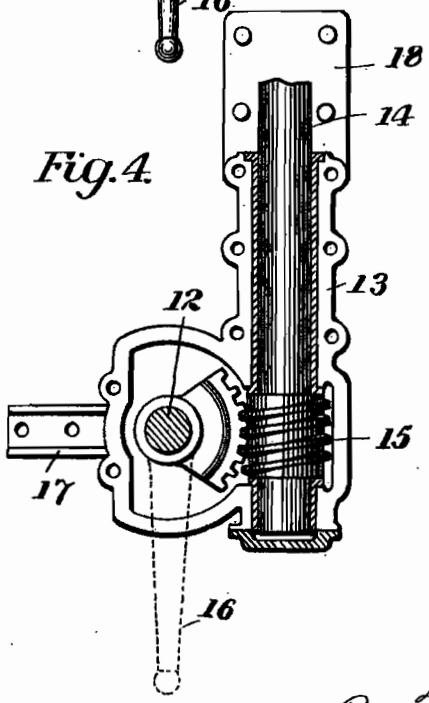

Witnesses
J. G. Stinkel
J. J. McCarthy

Inventor
Russell Huff
By Foster Freeman Watson & Coit
Attorneys

UNITED STATES PATENT OFFICE.

RUSSELL HUFF, OF DETROIT, MICHIGAN, ASSIGNOR TO PACKARD MOTOR CAR COMPANY, OF DETROIT, MICHIGAN, A CORPORATION OF WEST VIRGINIA.

MOTOR-VEHICLE.

No. 893,502. Specification of Letters Patent. Patented July 14, 1908.

Application filed December 18, 1907. Serial No. 407,054.

To all whom it may concern:

Be it known that I, RUSSELL HUFF, a citizen of the United States, and resident of Detroit, Wayne county, State of Michigan, have invented certain new and useful Improvements in Motor-Vehicles, of which the following is a specification.

The present invention relates to improvements in motor vehicles and particularly to the manner of mounting or supporting the steering gear casing.

The object of the invention is to provide means by which the steering gear casing may be hung at a greater distance below the body of the vehicle frame than has been heretofore practicable, while maintaining a rigid strong connection between the casing and frame.

In the accompanying drawings, Figure 1 is a side elevation of a portion of a motor vehicle frame and steering gear casing supported therefrom in accordance with the present invention; Fig. 2 is a similar view of the gear casing and its supporting devices on an enlarged scale; Fig. 3 is a front elevation viewed from the line 3—3 of Fig. 2; Fig. 4 is a face view of a portion of the steering gear, one section of the casing being removed.

Referring to the drawings, 1 designates one of the side bars of a motor vehicle frame, 2 a transverse or cross bar of such frame and 3 one of the forward supporting springs for the vehicle frame. The rear end of the spring is connected with a shackle 5, the lower end of which is pivotally connected with a bracket 6 depending from and rigidly secured to the side bar 1 of the frame. As shown, the bracket is provided with flanges 7, 8, which extend respectively along the side and lower faces of the bar 1 and are rigidly secured to said bar by bolts or rivets 9.

The bracket 6 is continued below and forward from its point of connection with the spring shackle 5 and terminates in a transversely extending plate or ear 10 which is shown as slightly inclined.

The steering gear casing, as shown, is made in two sections 13 detachably connected by suitable bolts; and is of such form as to provide bearings for a steering column 14, having thereon a worm 15, and for a substantially horizontal shaft 12, with which is connected a segment gear that meshes with the worm. An arm 16 at one end of the shaft 12 is adapted to actuate the devices for turning the forward wheels to control the direction of movement of the vehicle.

At one side the steering gear casing is provided with a laterally projecting ear or arm 17 which is secured firmly against the forward end 10 of the depending spring bracket 6; and near its opposite side the casing is provided with a rearwardly and upwardly extending arm 18 that has its upper end secured directly against the transverse frame bar 2.

Preferably the supporting bars 17, 18, of the gear casing are formed integral with one section thereof and it will be noticed that they are arranged on opposite sides of the bearings for the shaft 12 thus providing a very strong and rigid support for the steering devices.

The invention also makes it possible to utilize the depending spring bracket not only for furnishing a connection between the spring and the frame but also for assisting to support the gear casing.

Having described my invention what I claim and desire to secure by Letters-Patent is,

1. In a motor vehicle, the combination with the frame, the steering column, the forward spring, and the bracket depending from the frame and connected with the spring, of a steering gear casing having two arms, one of which is attached directly to the frame and the other to the said bracket.

2. In a motor vehicle, the combination with the frame, the steering column, the forward spring, and the bracket depending from the frame and connected with the spring, of a two-part steering gear casing, one of said parts having arms connected respectively to the frame and the depending bracket and the other part being connected to the first named part.

3. In a motor vehicle, the combination with the frame, the steering column, the forward spring, and the bracket depending from the frame and connected with the spring, said bracket having an extension below the point of connection of the spring, of a steering gear casing having a lateral arm connected to said extension, and an upwardly extending arm connected to the frame.

4. In a motor vehicle, the combination with the frame having longitudinal and transverse members, the steering column, the depending bracket connected with a longitudi-

nal member of the frame and the forward spring connected with said bracket, of a steering gear casing having a lateral arm connected with the said bracket and a second arm connected with a transverse member of the frame, for the purpose set forth.

5. In a motor vehicle, the combination with the frame, the steering column, the forward spring, and the bracket depending from the frame and connected with the spring, of a steering gear casing, a steering shaft 12 mounted in bearings in said casing, and arms on said casing on opposite sides of said shaft, said arms being respectively connected to the depending bracket and the frame, for the purpose set forth.

6. In a motor vehicle, the combination with the frame, the steering column, the forward spring, and the bracket depending from the frame and connected with the spring, of a steering gear casing and means for supporting the same including a connection from the casing to said bracket.

7. In a motor vehicle, the combination with the frame, the steering column, the forward spring, and the bracket depending from the frame and connected with the spring, of a steering gear casing attached to the frame and having an arm connected with said bracket.

In testimony whereof I affix my signature in presence of two witnesses.

RUSSELL HUFF.

Witnesses:

MILTON TIBBETTS,

JNO. D. CURRY.

A. LOOMIS.

IGNITION APPARATUS FOR HYDROCARBON ENGINES.

APPLICATION FILED DEC. 27, 1907.

1,011,977. Patented Dec. 19, 1911.

2 SHEETS—SHEET 1.

Fig. 1.

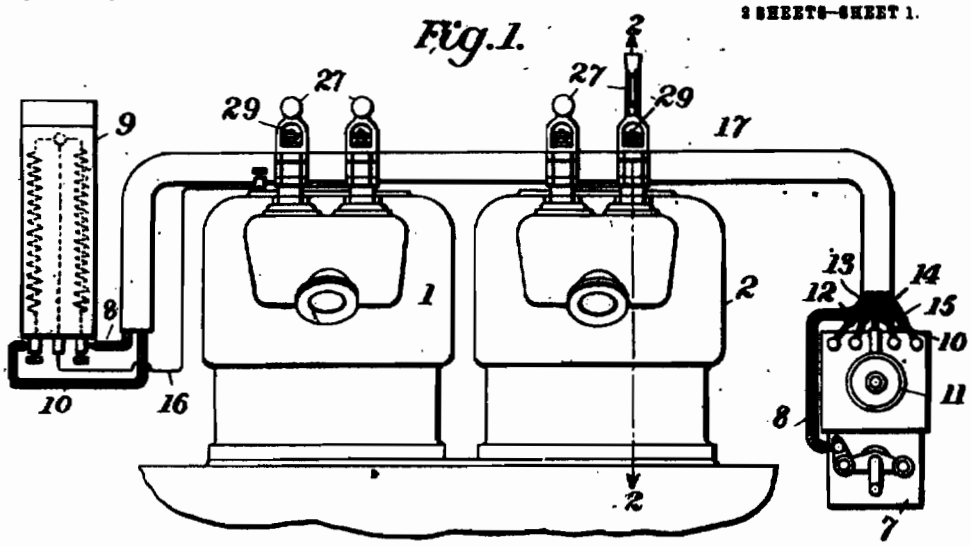

Fig. 2.

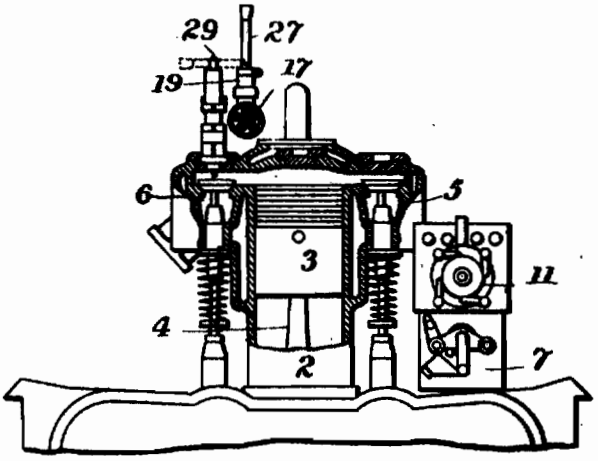

Fig. 3.

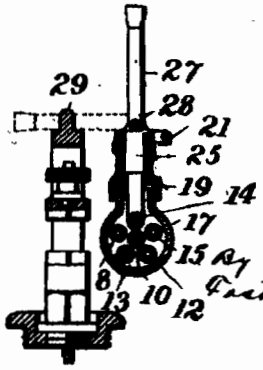

Witnesses

J. J. Stickel

J. J. McCarthy

Inventor

Allen Loomis

By Foster, Freeman, Watson & Coit

Attorneys

A. LOOMIS.

IGNITION APPARATUS FOR HYDROCARBON ENGINES.

APPLICATION FILED DEC. 27, 1907.

1,011,977. Patented Dec. 19, 1911.

2 SHEETS—SHEET 2.

Fig. 4.

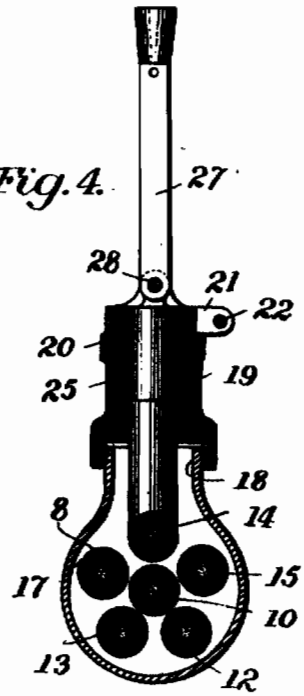

Fig. 6.

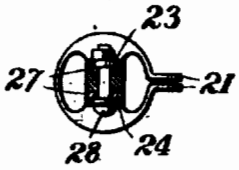

Fig. 5

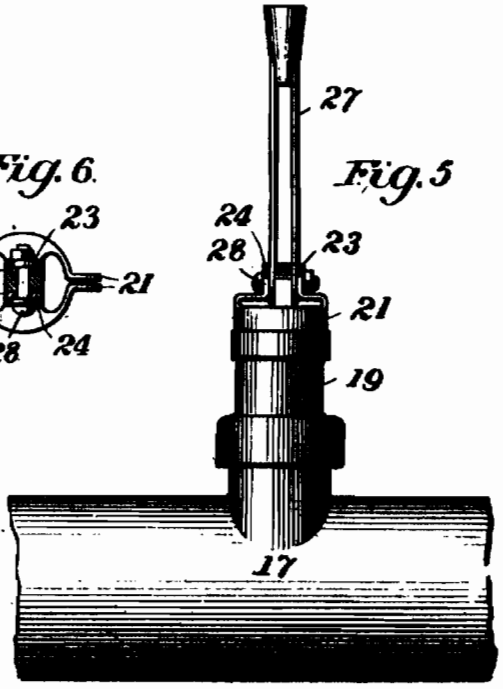

Fig. 7.

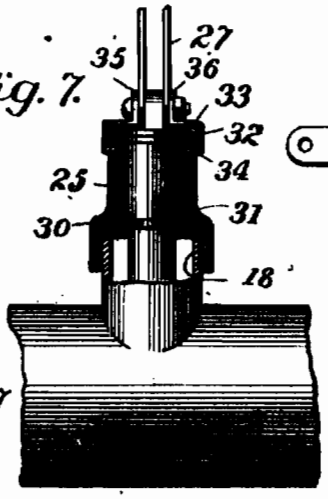

Fig. 8.

Fig. 9.

Fig. 10.

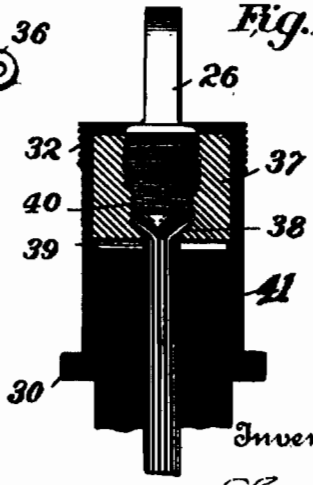

Witnesses

J. G. Pinkel

J. J. McCarthy

Inventor

Allen Loomis

By Foster, Freeman, Watson & Coit

Attorneys

UNITED STATES PATENT OFFICE.

ALLEN LOOMIS, OF DETROIT, MICHIGAN, ASSIGNOR, BY MESNE ASSIGNMENTS, TO PACKARD MOTOR CAR COMPANY, OF DETROIT, MICHIGAN, A CORPORATION OF MICHIGAN.

IGNITION APPARATUS FOR HYDROCARBON-ENGINES.

1,011,977. Specification of Letters Patent. Patented Dec. 19, 1911.

Application filed December 27, 1907. Serial No. 408,231.

To all whom it may concern:

Be it known that I, ALLEN LOOMIS, a citizen of the United States, residing at Detroit, in the county of Wayne and State of Michigan, have invented certain new and useful Improvements in Ignition Apparatus for Hydrocarbon-Engines, of which the following is a specification.

This invention relates to improvements in the ignition apparatus of multiple cylinder hydrocarbon engines for motor vehicles. Its objects are to provide neat, convenient and compact means for housing and supporting the high tension conductors which supply current to the various spark plugs of the engine cylinders. To this end I employ a single tube for containing all of the conducting wires and provide convenient means for leading off the current from the various wires to the spark plug.

The invention will be understood from the following description taken in connection with the accompanying drawings.

In the drawings—Figure 1 is a side elevation of the cylinders of a four cylinder engine showing my invention applied thereto; Fig. 2 is a section on the line 2—2 of Fig. 1; Fig. 3 is a detail partly in section showing a spark plug having my novel supporting means in proper position adjacent thereto; Figs. 4, 5 and 6 are enlarged detail views of the housing, terminal and switch; Figs. 7, 8 and 9 are detail views of a modification; and Fig. 10 is an enlarged view of the terminal which receives the end of a conducting wire.

In the drawings 1, 2 indicate two cylinder casings each comprising a pair of cylinders of a four cylinder hydrocarbon engine.

3 represents one of the pistons, 4 a connecting rod, 5 an exhaust valve, and 6 an inlet valve for the explosive mixture.

A magneto 7 suitably geared to be run by the engine supplies current for the ignition devices. The low tension current passes through a conductor 8 to a coil or transformer in box 9, and the high tension current passes through a conductor 10 to a distributer 11 driven by the engine, by means of which it is distributed to the several cylinders and the sparks properly timed. The current from the distributer passes to the cylinders through conductors 12 to 15 inclusive. The high and low tension circuits are completed through a ground wire 16 which connects the coil with the engine or other part of the machinery. The conducting wires above mentioned are insulated and all of them pass into a tube 17 which extends over the engine cylinders in proximity to the spark plug, and thus these wires are supported out of sight and in a very small space. The tube 17 may rest on the engine cylinders or may be supported in any suitable way. Opposite each spark plug the tube or housing 17 is provided with an opening surrounded by the screw threaded collar 18 formed integral with the tube. A holder 19 is secured to the collar 18 and this holder is preferably cylindrical in form and composed of insulating material such as hard rubber. In the form shown in Figs. 4 to 6 the outer surface of the holder is offset near its upper end forming a shoulder 20 upon which rests the split ring 21, the ends of which are adapted to be clamped together by a bolt 22 which binds the ring firmly upon the holder. This ring has perforated ears 23, 24 which extend upwardly and inwardly from the ring to form supports for the switch arm as hereafter described. The interior of the holder 19 is substantially cylindrical in shape and receives a terminal member 25 which makes contact with one of the conductors and which has upon its upper end an eye bolt 26 which has its opening in line with the openings in the ears 23, 24. A knife switch 27 has its two blades secured between the eye bolt 26 and the ears 23, 24 by the bolt 28 passing through the parts. As shown in Fig. 3 the housing and holder are in such position that the switch 27 is adapted to be brought down upon the ends of the spark plug 29 so as to complete the electrical connection between the conductor and the plug.

The form of the holder and terminal shown in Fig. 7 is slightly different from that of Fig. 4 in that the terminal here is composed of an outer cylindrical portion having a circumferential flange 30 near its bottom to engage a shoulder 31 formed on the interior of the holder 19, and this tube is also provided with screw threads 32 near its upper end. A nut 33, is adapted to be screwed on the threads 32, and a disk 34 is placed around said tube below the nut and is clamped between that nut and the top of the holder 19. This disk, as shown in Fig. 8, has side ears 35, 36 which are bent up over

the top of the terminal and into position adjacent the eye bolt 26 for the purpose of supporting the switch.

The interior construction of the terminal shown in Fig. 4 is the same as that shown in Fig. 7. As shown in Fig. 10 the terminal embodies the outer cylindrical casing 41 which is preferably composed of insulating material such as hard rubber, but which may be made of brass or other material. A cylindrical core 37 composed of brass or other conducting material fits within the upper part of the tube, and this core is provided with a central screw threaded opening which is preferably made of two diameters and the lower end of which is tapered as shown at 38. The opening through the tapered portion 38 is made of proper size to receive the end wires 39 of one of the conductors and it will be noted that the casing 41 is preferably of such size that the end of one of the conductors including the insulation thereon will fit within it. A short pointed screw 40 is inserted in the central opening of the core 37 and as shown operates to spread the ends of the wires composing the conductor 39 and hold them in close contact with the inclined surface 38 thus making good electrical connection between the conductor 39 and the core 37. The eye bolt 26 is screwed into the upper end of the core and therefore makes electrical connection therewith.

Having thus described my invention, what I claim is:

1. In an ignition system for hydrocarbon engines for motor vehicles, the combination with a plurality of engine cylinders, of a spark plug on each cylinder, a plurality of separate insulated conductors, a tube containing said conductors passing in proximity to said spark plugs and having an opening opposite each plug, a holder secured to said tube at each of said openings, a terminal member within each holder making electrical contact with one of the conductors, and pivoted switch arms supported by said holders in position to make contact with the spark plugs thereby making electrical connection between the terminals and plugs.

2. In an ignition system for hydrocarbon engines for motor vehicles, the combination with a plurality of engine cylinders, of a spark plug on each cylinder, a plurality of separate insulated conductors, a tube containing said conductors passing in proximity to said spark plugs and having an opening opposite each plug, a holder secured to said tube at each of said openings, a terminal member within each holder making electrical contact with one of the conductors, an eye bolt secured in said terminal member and extending above the top of the holder, a supporting ring secured to said holder and having perforated ears extending upon the sides of said eye bolt, and a knife switch secured between said ears and eye bolt in position to engage a spark plug.

3. In an ignition system for hydrocarbon engines for motor vehicles, the combination with a plurality of engine cylinders, of a spark plug on each cylinder, a plurality of separate insulated conductors, a tube containing said conductors passing in proximity to said spark plugs and having an opening opposite each plug, a holder secured to said tube at each of said openings, a terminal member within each holder making electrical contact with one of the conductors, an extension from said terminal member projecting above the holder and having a hole therethrough, a ring secured to the holder and having perforated ears extending up by the side of said extension, and a knife switch pivotally secured to said ears and extension.

4. In an ignition system for hydrocarbon engines for motor vehicles, the combination with a plurality of engine cylinders, of a plurality of separate insulated conductors, a tube containing said conductors passing in proximity to said cylinders the said tube being provided with an opening opposite each cylinder, a holder secured to said tube over each opening, a terminal member within each holder, switches secured to said holders having electrical connection with said terminal members.

5. In an ignition system for hydrocarbon engines for motor vehicles, the combination with a plurality of engine cylinders, of a plurality of separate insulated conductors, a tube containing said conductors passing in proximity to said cylinders the said tube being provided with an opening opposite each cylinder and with a screw-threaded collar for each opening, a screw-threaded holder engaging each of said collars, a terminal member within each holder, and means for securing a conductor to each of said terminal members.

6. In an ignition system for hydrocarbon engines for motor vehicles, the combination with engine cylinders provided with spark plugs, of a tube placed in proximity to said plugs and having openings adjacent thereto, conductors within said tube, a holder secured over the said openings in the tube, a conducting core within said holder having an opening therethrough adapted to receive the end of one of the conductors, means for securing the end of a conductor in the lower end of said opening, and an extension of said terminal secured in the upper end of said opening and projecting above the top of the holder.

7. In an ignition system for hydrocarbon engines for motor vehicles, the combination with engine cylinders provided with spark plugs, of a tube placed in proximity to said plugs and having openings adjacent thereto,

R. HUFF.

MOTOR VEHICLE.

APPLICATION FILED NOV. 6, 1908.

1,132,850.

Patented Mar. 23, 1915.

2 SHEETS—SHEET 1.

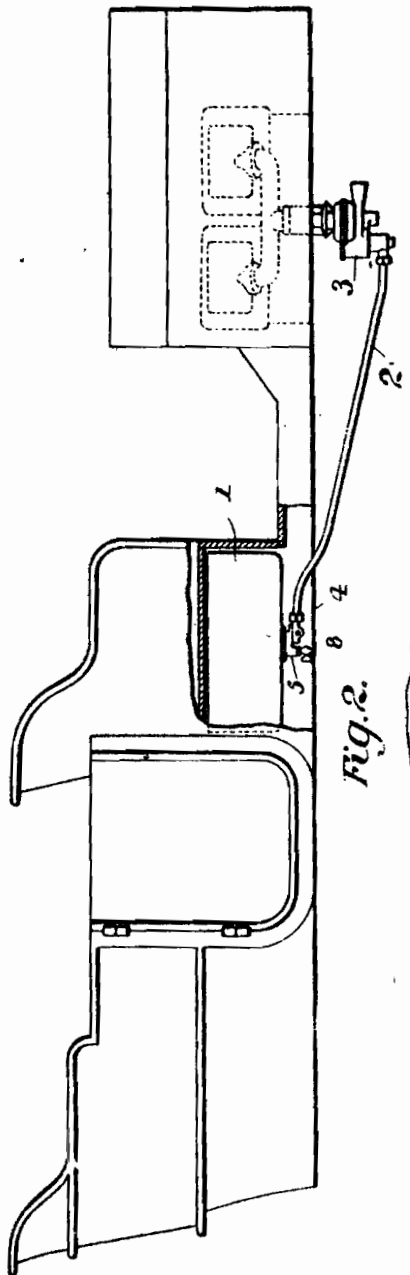

Fig. 1.

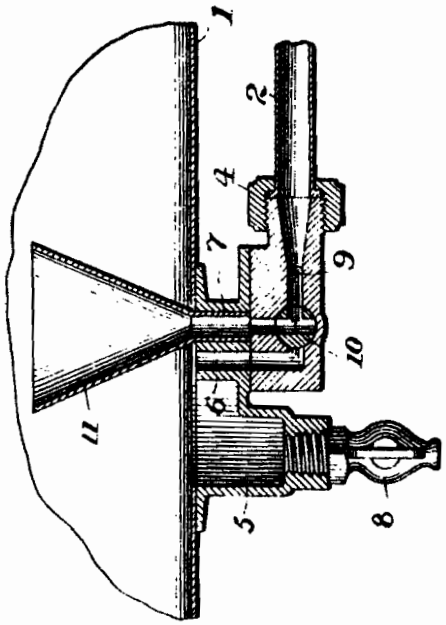

Fig. 2.

Witnesses

J. P. Finkel

G. P. Kramer

Inventor

Russell Huff

By Foster Freeman Watson & Coit

Attorneys

R. HUFF.

MOTOR VEHICLE.

APPLICATION FILED NOV. 6, 1908.

1,132,850. Patented Mar. 23, 1915.

2 SHEETS—SHEET 2.

Fig. 3.

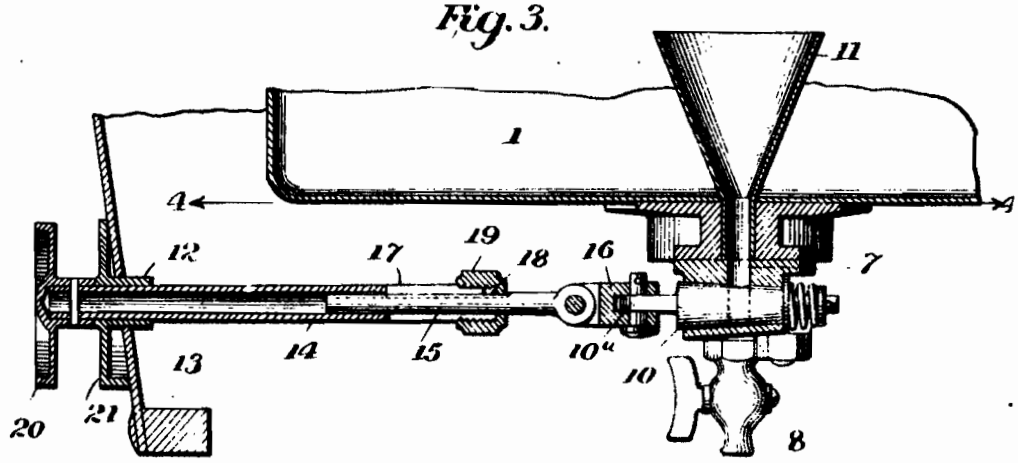

Fig. 4.

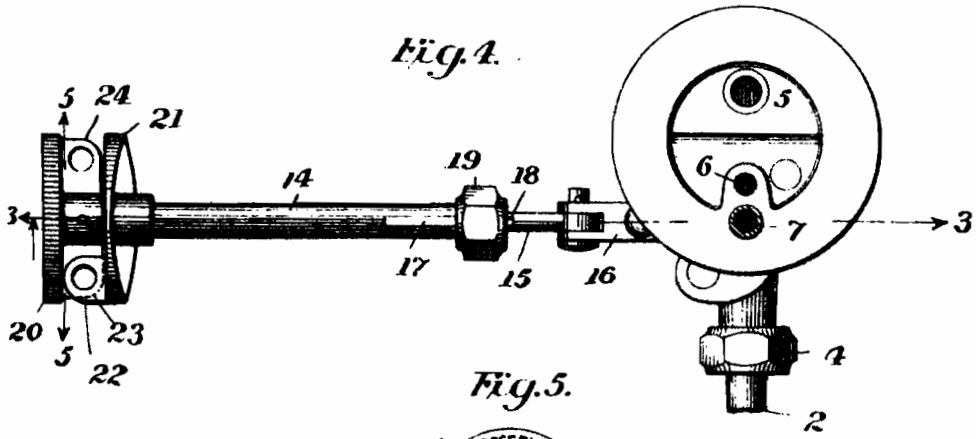

Fig. 5.

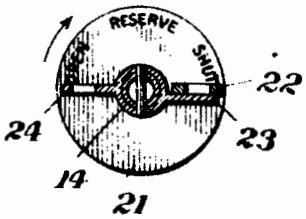

Witnesses

J. G. Winkel

G. P. Kramer

Inventor

Russell Huff

By Foster Freeman Watson & Coit

Attorneys

UNITED STATES PATENT OFFICE.

RUSSELL HUFF, OF DETROIT, MICHIGAN, ASSIGNOR, BY MESNE ASSIGNMENTS, TO PACKARD MOTOR CAR COMPANY, OF DETROIT, MICHIGAN, A CORPORATION OF MICHIGAN.

MOTOR-VEHICLE.

1,132,850. Specification of Letters Patent. Patented Mar. 23, 1915.

Application filed November 6, 1908. Serial No. 461,400.

To all whom it may concern:

Be it known that I, RUSSELL HUFF, a citizen of the United States, and resident of Detroit, in the county of Wayne and State of Michigan, have invented certain new and useful Improvements in Motor-Vehicles, of which the following is a specification.

The present invention relates to improvements in motor vehicles and particularly to the means for holding a supply of gasolene and controlling the passage thereof to the carbureter of the engine.

In the accompanying drawings: Figure 1 is a side elevation partly broken away of a portion of the body of a motor vehicle having the present invention applied thereto; Fig. 2 is an enlarged detail view of a portion of the gasolene tank and parts attached thereto; Fig. 3 is a sectional view substantially on the line 3—3 of Fig. 4; Fig. 4 is a plan of parts shown in Fig. 3 partly in section on the line 4—4 of that figure; Fig. 5 is a view on line 5—5 of Fig. 4.

Referring to the drawings, 1 designates the gasolene tank which, as shown, is arranged beneath the forward seat of the vehicle, being suitably supported from the frame, and 2 designates the pipe through which the engine carbureter 3 receives its supply of gasolene. The rear end of the pipe 2 is secured by a coupling 4 to a casing attached to the bottom of the tank 1 and having therein a sediment pocket or well 5 and two passages 6, 7, which communicate with suitable passages or apertures in the bottom of the tank. In the lower end of the sediment pocket 5 is secured a drain cock 8, and the lower ends of the passages 6, 7 are connected by a duct or passage 9 which communicates with the carbureter supply pipe 2. A three-way plug valve 10 is adapted to connect either of the passages 6, 7 with the pipe 2 or to close both of said passages.

11 designates a tube which is fitted within the passage 7 and extends upwardly within the tank 1 for a suitable distance. Preferably the portion of this tube 11 within the tank is expanded at its upper end so as to have the general form of a funnel, as represented. When the valve 10 is in the normal position represented in Fig. 2, gasolene will be drawn from the tank 1 through the tube 11 which extends several inches above the bottom of the tank. The purpose of thus extending the tube 11 upwardly in the tank is to guard against the withdrawal of all the gasolene from the tank without notice to the machine operator, as by this construction a reserve body of gasolene is maintained in the tank below the upper end of the tube 11 which can be only drawn upon by turning the valve 10 so as to connect the passage 6 with the pipe 2.

The valve 10 is actuated by a shaft connected thereto at one end and having its other end extending through a bearing 12 supported in one of the side panels 13 of the vehicle body. As the tank 1 is subject to more or less relative movement with regard to the vehicle body, and also in order that the parts may be more readily assembled, the valve actuating shaft is connected with the valve by a universal joint. In order to prevent the necessity of making a special length of shaft for each vehicle or arranging all of the tanks at exactly the same distance from the bearing 12, the said shaft is made extensible, consisting of two telescoping sections 14, 15, the former being tubular and extending through the bearing 12, while the inner section 15 extends into said outer section 14 and is connected by a universal joint 16 with stem 10^a of the valve 10. The inner end of the member 14 of the valve actuating shaft is provided with longitudinal slots, and a key 17 is adapted to extend through either of said slots and fit within a longitudinal groove 18 formed in the shaft member 15 to prevent any turning movement of the shaft sections relative to each other. By means of a clamping sleeve 19 which screws onto the member 14 and over the key 17 the members 14, 15 of the valve actuating shaft can be rigidly connected in any adjusted position. On the outer end of said shaft is secured a handle 20 shown as being of circular form. A circular disk or plate 21, which may, as shown, be supported by the outer end of the bearing 12, surrounds the shaft outside of the vehicle body and is provided with an outwardly projecting ear or lug 22 and with the words "Open," "Reserve" and "Shut" arranged in the order shown in Fig. 5, or with any other suitable indicating marks repre-

senting the three positions into which the valve 10 may be adjusted.

Connected with the handle 20 are two lugs 23, 24 adapted to coöperate with the stationary lug or stop 22, and by their relation to said lug and the aforesaid words on the plate, indicate the position of the valve 10. When the parts are in the position shown in Fig. 5 the valve 10 has been adjusted to the position shown in Fig. 2 in which the tube 11 and passage 7 are connected with the carbureter supply pipe 2. By turning the shaft in the direction of the arrow in Fig. 5, the valve will first be caused to close the passage 7 and connect the passage 6 with the supply pipe 2, thus drawing upon the "reserve" supply of gasolene in the tank 1. If the turning movement of the valve is continued until the lug 24 contacts with the stop 22, the valve 10 will be adjusted to close both the passages 6 and 7, and, in order that the parts may be maintained in this position, the lugs 22 and 24 are preferably provided with apertures through which a padlock or other fastening means may be inserted when said lugs are in contact. As shown the casing in which the sediment pocket 5 and passages 6, 7 are formed is preferably made in two sections connected by suitable bolts, and the casing itself is connected with the bottom of the tank by soldering or any other suitable means.

Having thus described the invention, what is claimed is:

1. In a motor vehicle, the combination with the vehicle body and gasolene tank, of a valve controlling the passage of gasolene from the tank to the carbureter, a shaft comprising two telescoping sections, one connected with the valve by a universal joint, and the other extending through a side of the body of the vehicle, and having at its free end a handle, a key fitted in a groove in one section of the rod and extending into a slot in the other, and a clamping sleeve surrounding the sections and adapted to hold them in any adjusted position.

2. In a motor vehicle, the combination with the vehicle body and gasolene tank, of a valve controlling the passage of gasolene from the tank to the carbureter, a handle arranged on the vehicle body, a universally jointed rotatable shaft connecting the valve and handle, and coöperating stops on the vehicle body and shaft for indicating the relative position of the valve, some of said stops being constructed to receive a locking device.

In testimony whereof I affix my signature in presence of two witnesses.

RUSSELL HUFF.

Witnesses:
L. C. Tenney,
Howard Harkness.

conductors within said tube, a holder secured over each opening in the tube, a cylindrical conducting core within said holder having a longitudinal screw-threaded opening through its center which opening is tapered at the bottom to a size to fit the conductor, a short pointed screw fitting in said opening and engaging the end of the conductor, and a screw-threaded eye bolt secured in the upper end of said opening and projecting above the holder.

8. In an ignition system for hydrocarbon engines for motor vehicles, the combination with engine cylinders, of a tube adapted to contain conductors adjacent said cylinders and having openings therein, a holder adapted to be secured over each opening in said tube, a tubular casing within said holder having an inturned flange at the top, a conducting core fitting within the upper part of said casing and having a central screw-threaded opening therethrough with a contracted lower end, a pointed screw fitting in said opening and adapted to approach the contracted portion thereof, and an eye bolt screwed into the upper part of the opening and projecting above the top of the tubular casing.

In testimony whereof I affix my signature in presence of two witnesses.

ALLEN LOOMIS.

Witnesses:

MILTON TIBBETTS,

L. C. TENNEY.

137/504

A. LOOMIS.

UNIVERSAL SHAFT COUPLING.

APPLICATION FILED MAR. 7, 1908.

1,178,529. Patented Apr. 11, 1916.

Fig. 1.

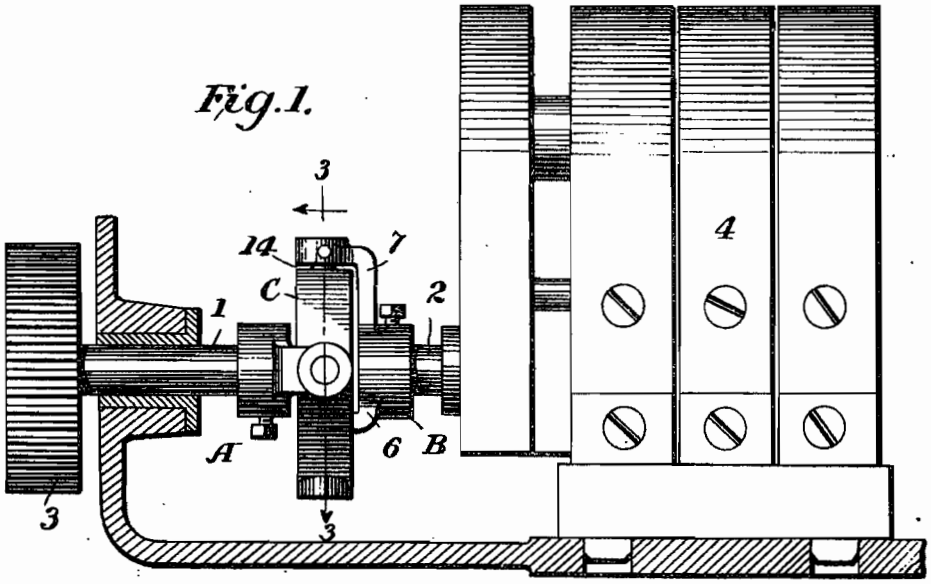

Fig. 2.

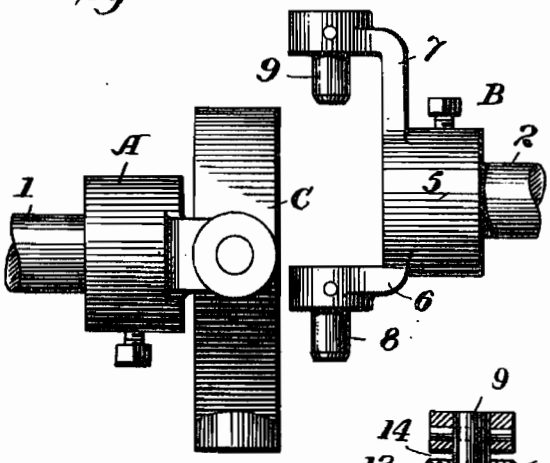

Fig. 4.

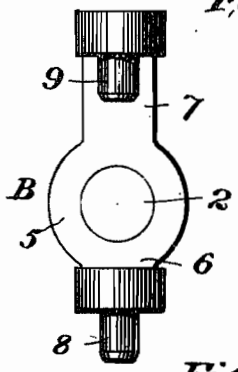

Fig. 5.

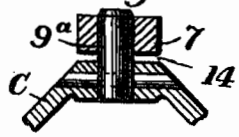

Fig. 3.

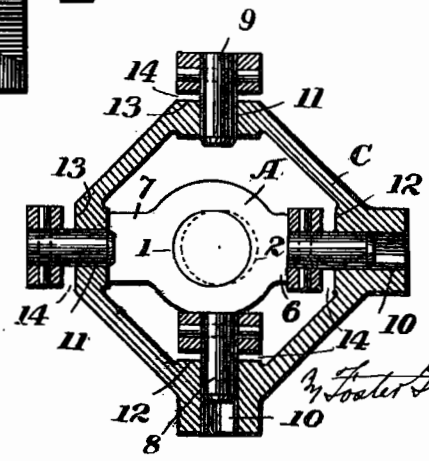

Witnesses

J. G. Stinkel

J. J. McCarthy

Inventor

Allen Loomis

By Foster Freeman Watson & Coit

Attorneys

UNITED STATES PATENT OFFICE.

ALLEN LOOMIS, OF DETROIT, MICHIGAN, ASSIGNOR, BY MESNE ASSIGNMENTS, TO PACKARD MOTOR CAR COMPANY, OF DETROIT, MICHIGAN, A CORPORATION OF MICHIGAN.

UNIVERSAL SHAFT-COUPLING.

1,178,529. Specification of Letters Patent. Patented Apr. 11, 1916.

Application filed March 7, 1908. Serial No. 419,741.

To all whom it may concern:

Be it known that I, ALLEN LOOMIS, a citizen of the United States, residing at Detroit, in the county of Wayne and State of Michigan, have invented certain new and useful Improvements in Universal Shaft-Couplings, of which the following is a specification.

This invention relates to universal joints for shafting such as are adapted to communicate rotary movement from one section of a shaft to another whether the same be in line, or in parallel lines and offset, or at an angle to each other.

The invention is particularly adapted for cases in which it may be desirable to disconnect the shaft sections at the coupling, the present coupling being adapted to be disconnected and reconnected instantly without loosening screws, bolts or other connecting means.

The invention is illustrated in the accompanying drawing, in which,

Figure 1 is a side elevation of two shaft sections connected by my improved coupling, one of the sections being connected with a magneto to illustrate one of the uses of the invention; Fig. 2 is a side view of the coupling, one of the parts being detached; Fig. 3 is a section on the line 3—3 of Fig. 1; Fig. 4 is an end view of the coupling section shown at the right in Fig. 2; Fig. 5 is a detail of a reverse or modified form.

Referring to the drawing, 1, 2, indicate the shaft sections which are to be united by the coupling, section 1 being illustrated as the driving section, having a driving pinion 3 thereon, and the section 2 being illustrated as the driven section and forming the shaft of a magneto 4, such as is used for generating current for the ignition apparatus of a motor vehicle. On the shaft 1 is a coupling section A and on the shaft 2 a similar coupling section B which sections may be identical in construction. The coupling sections A, B, are each pivotally connected with an intermediate section C as will be presently described.

Each of the sections A, B, as illustrated, has a hub 5, a short arm 6 and a longer arm 7. Upon the shorter arm 6 is an outwardly projecting pin or pivot 8 and upon the longer arm 7 is an inwardly projecting pin or pivot 9, which pivots are arranged in a diametrical line passing through the axial line of the shaft section to which the coupling member is connected.

The intermediate coupling member C is in the form of a frame having two pairs of radial openings 10, 11, to receive the pivots 8, 9, of the members A, B. These openings are all radial to a common center and the openings of each pair are in line with each other. The surface of the frame or member C is faced off adjacent to the openings to form bearings for the arms carrying the pivot pins. Thus the inner surface adjacent to the openings 10 is faced off at 12 and the outer surface adjacent to the openings 11 is faced off at 13. The shape of the frame C may be greatly varied, it being simply necessary that it shall be adapted to receive the pivot pins of the shaft members. One of the pivot pins of each of the sections A, B, is made longer than the other to facilitate assembling the coupling, as it is easier to insert one pin at a time than the two simultaneously.

The invention is illustrated as a convenient means of connecting the driving shaft with a magneto shaft to void the necessity of correctly alining the two shafts. As shown in Fig. 3 the driving and driven shafts are offset axially and one of the valuable features of the invention is that it permits of operatively connecting shafts which are so offset though arranged in parallel lines. It is usually a simple matter to arrange shafts in parallel bearings but often difficult to adjust them into coaxial position. By the use of the present invention shafts which are slightly offset axially can be driven, one from the other, as readily as shafts which are truly in line. This results from the freedom with which the members A and B can work radially in the member C. The parts are so proportioned that when as-

sembled the faces 12 and 13 are separated from the adjacent arms of the members A and B by gaps 14 sufficient to permit the required relative radial movement of the members A and B with respect to the member C.

If it be desired to remove the magneto the shaft is turned to the position shown in Fig. 1 and the magneto may then be raised to disconnect the pins from the intermediate member C and then moved to the right, as illustrated in Fig. 2, which will totally disconnect the member B from the member C, leaving the member C upon the member A. By reversing these movements the magneto may be again connected with the driving shaft 1.

It will be evident that the construction of this universal joint may be reversed by connecting the pivot pins to the member C and making pivotal openings in the arms 6 and 7 suitable to receive the pins. This change is illustrated in Fig. 5 which shows one of the arms 7 provided with an eye to receive the pin 9[a] carried by the intermediate member C. It will also be evident that one object of my invention, which is to secure the ready connections and disconnection of two shaft members united by a universal joint, may be effected if only one of the members A, B, is readily disconnectible from the intermediate member C. In some instances it may be desirable to permanently connect the members A, C, and simply make the member B disconnectible. For the sake of economy, however, it is preferred to make the members A, B, identical so that they can be cast in the same mold and subjected to the same machine operations. It will also be evident that in so far as the connection of parallel offset shafts is concerned, it is not absolutely necessary that the several parts of the coupling should be readily separable The form of coupling shown in the drawing, however, embodies all of the features of utility referred to and is the preferred embodiment of the invention.

Without limiting myself to the particular construction illustrated and described, I claim,

1. A universal joint comprising two shaft members adapted to be connected with two shaft sections respectively, an intermediate member, and pivotal connections between said shaft members and said intermediate member, a portion of said intermediate member lying between the pivotal portions of one of said shaft members, and the opposite portion of said intermediate member being exterior of said shaft member, whereby the shaft members are adapted to be disconnected from the intermediate member by being moved transversely of their axes.

2. A universal joint comprising two shaft members adapted to be connected with two shaft sections, respectively, and an intermediate member, said shaft members each having radially projecting arms, provided with separate radially-arranged pivots connecting said arms and said intermediate member, one of the arms of one shaft member being arranged interiorly of said intermediate member and the other of said arms being arranged exteriorly of said intermediate member, whereby said shaft member may be disconnected from the intermediate member by a lateral movement in the direction of the axes of its pivots and without removing the pivots from the arms.

3. A universal joint comprising two shaft members adapted to be connected with two shaft sections respectively, and an intermediate member, said shaft members each having radially projecting arms, provided with separate radially-arranged pivots connecting said arms and said intermediate member, one of the arms of each of said shaft members being arranged interiorly of said intermediate member and the other of said arms being arranged exteriorly of said intermediate member, whereby either of said shaft members may be disconnected from the intermediate member by a lateral movement in the direction of the axes of its pivots and without removing the pivots from the arms.

4. A universal shaft coupling comprising two shaft members and an intermediate member to which said shaft members are pivotally connected, one of said shaft members having a short arm extending into the intermediate member and a long arm bearing upon the outer surface of the intermediate member, and pivot pins connecting the intermediate member and said arms and extending in the same direction from their support, whereby the parts may be separated by a radial movement.

5. A universal shaft coupling comprising two shaft members, each provided with a short arm and a long arm, and an intermediate member, the short arms of the shaft members extending into the intermediate member and the longer arms coöperating with the outer surface of the intermediate member, and separate pivot pins connecting the said arms with said intermediate member, whereby either of the shaft members may be disconnected from the intermediate member by a lateral movement in the direction of the axes of its pivot pins and without removing the pivot pins from the arms.

6. A universal shaft coupling comprising two shaft members each provided with means for connecting it to a shaft section

and with a shorter and a longer arm, pivot pins carried by the arms of each shaft section arranged in the same diametrical line and extending in the same direction from said arms, and an intermediate member having four openings to receive said pivot pins, whereby the shaft members are adapted to be moved in the direction of the axes of their pivots and disengaged from said intermediate member.

In testimony whereof I affix my signature in presence of two witnesses.

ALLEN LOOMIS.

Witnesses:
L. C. TENNEY,
C. I. DALE.

M. TIBBETTS.

IGNITION APPARATUS FOR HYDROCARBON ENGINES.

APPLICATION FILED APR. 17, 1908.

1,023,180. Patented Apr. 16, 1912.

2 SHEETS—SHEET 1.

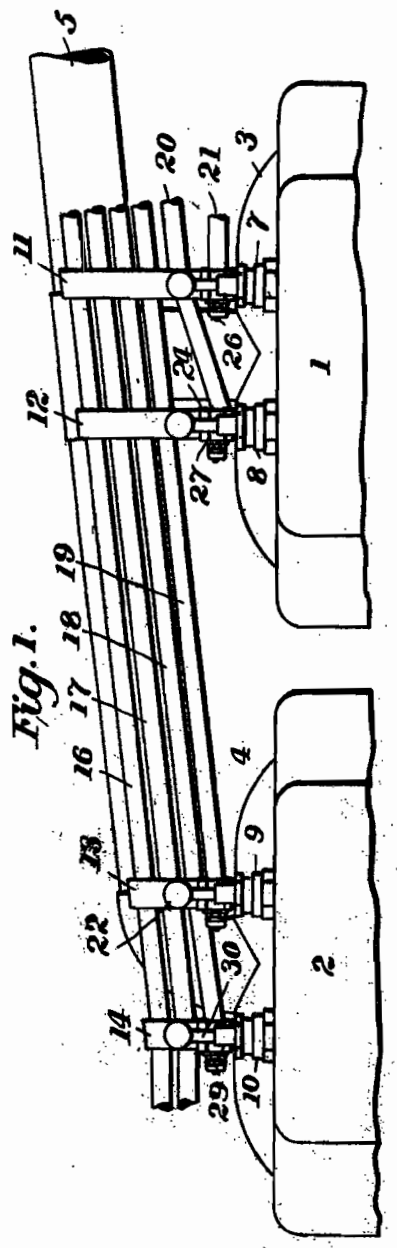

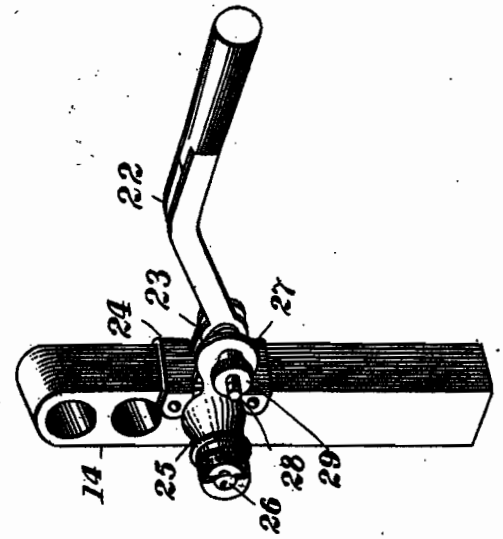

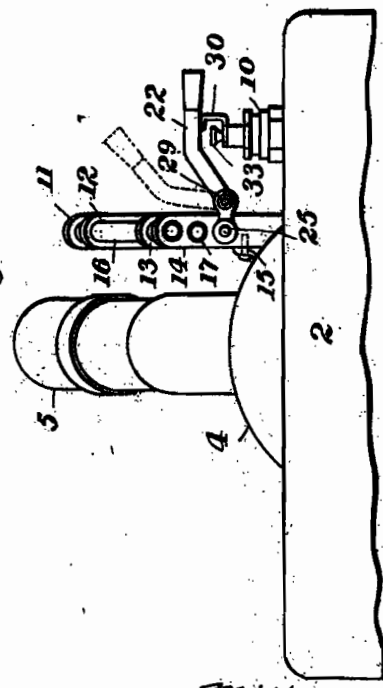

Witnesses

J. G. Stinkel

J. J. McCarthy

Inventor

Milton Tibbetts

By Foster, Freeman, Watson & Coit

Attorneys

M. TIBBETTS.

IGNITION APPARATUS FOR HYDROCARBON ENGINES.

APPLICATION FILED APR. 17, 1908.

1,023,180. Patented Apr. 16, 1912.

2 SHEETS—SHEET 2.

Fig. 4.

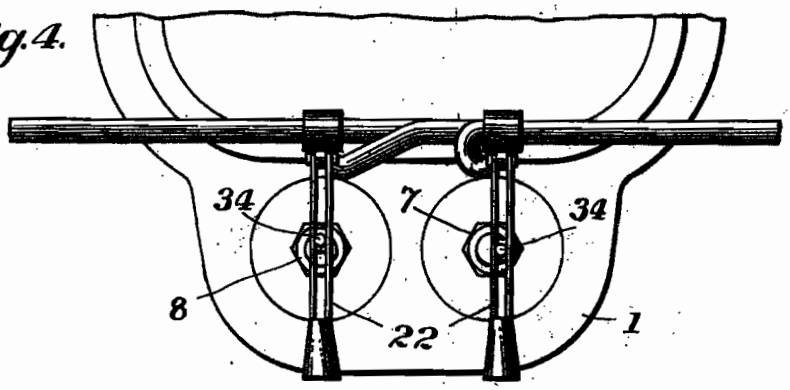

Fig. 5.

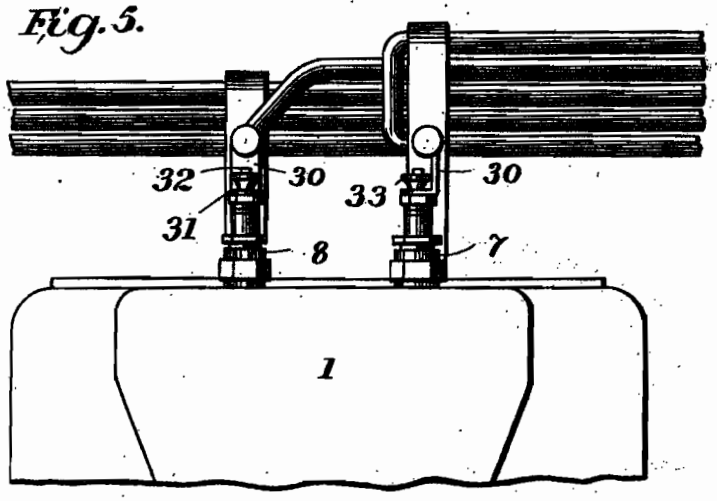

Fig. 6.

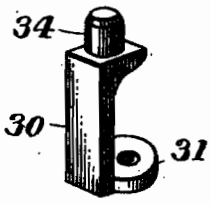

Fig. 7.

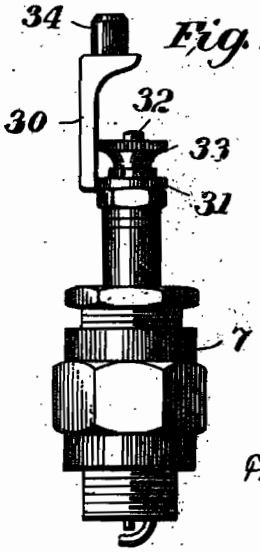

Fig. 8.

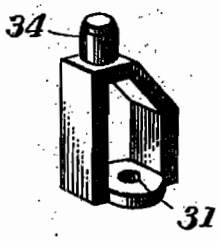

Witnesses

J. G. Stinkel

J. J. McCarthy

Inventor

Milton Tibbetts

By

Foster, Freeman, Watson & Coit

Attorneys

UNITED STATES PATENT OFFICE.

MILTON TIBBETTS, OF DETROIT, MICHIGAN, ASSIGNOR, BY MESNE ASSIGNMENTS, TO PACKARD MOTOR CAR COMPANY, OF DETROIT, MICHIGAN, A CORPORATION OF MICHIGAN.

IGNITION APPARATUS FOR HYDROCARBON-ENGINES.

1,023,180. Specification of Letters Patent. Patented Apr. 16, 1912.

Application filed April 17, 1908. Serial No. 427,634.

To all whom it may concern:

Be it known that I, MILTON TIBBETTS, a citizen of the United States, residing at Detroit, in the county of Wayne and State of Michigan, have invented certain new and useful Improvements in Ignition Apparatus for Hydrocarbon-Engines, of which the following is a specification.

This invention relates to ignition apparatus for hydrocarbon engines, and has particular reference to means for mounting high tension wires and knife switches on insulating posts on the engine cylinders, means for making connection between the wires and switches for the spark plugs and adjustable means for alining the knife switches and spark plugs. Its objects are to simplify the construction and improve the appearance and operation of the ignition device, thereby producing an ignition system in which the parts may be quickly and easily assembled and adjusted to proper operative position.

In the accompanying drawings, Figure 1 is a side elevation of a portion of two adjacent engines having the preferred form of my invention applied thereto; Fig. 2 is an elevation taken at right angles to that of Fig. 1; Fig. 3 is a perspective view of one of the insulating posts carrying a wire terminal and a knife switch; Fig. 4 is a plan view of a modified form of the invention; Fig. 5 is a side elevation of what is shown in Fig. 4; Fig. 6 is a perspective view of an adjustable contact piece for the spark plug; Fig. 7 is a side view of the spark plug having the contact piece secured in position thereon; and Fig. 8 is a perspective view of a modified form of contact piece.

In Fig. 1, I have shown my system applied to two two-cylinder engines mounted side-by-side. Each engine is made of a single casting, the cylinders 1 and 2 being surrounded by the water jackets 3 and 4. Each water jacket has an outlet connecting with the outlet pipe 5 which may be made flexible, and which is mounted at an inclination above the tops of the engine cylinders, as is usual in motor cars.

Each engine cylinder is provided with an opening in the inlet in which is mounted a spark plug, the casings of these plugs being lettered in the drawings as 7, 8, 9 and 10. Adjacent the plugs are the insulating posts 11, 12, 13 and 14 which carry the high tension wires which supply current to the spark plugs, and also carry the two wires leading to the transformer. These insulating posts are secured in place on top of the cylinder by means of bolts passing through the lug 15 on the top of the cylinder casing (see Fig. 3). As shown in Fig. 1 there are six wires leading to the posts 11, one of the top wires 16, 17 being intended to carry the low tension current to the transformer coil, and the other being intended to carry the high tension current from the distributer of the magneto to the secondary wire of the transformer coil. Therefore these two wires pass entirely across the top of the engine cylinders and to the transformer. The four lower wires 18, 19, 20 and 21 carry the high tension current for the four spark plugs, one wire terminating at each insulating post. It will be noted that the wires are arranged at an inclination substantially the same as that of the water outlet pipe 5, and that the lowest wire is the one which terminates at any post and makes connection with the knife switch of the spark plug. This inclined arrangement of the wires and the connection of the lowest wire with the switch makes a construction having distinct advantages over those in common use where the top wire is the one connected with the spark plug. It improves the appearance of the device and enables the connection with the knife switch to be made at a lower point.

It will be understood that the high tension wires are insulated and are made up of small wires in the form of a cable and it has been customary to bend the wire which is to terminate at a particular post so as to make connection with the knife switch mounted on that post. In order to avoid this and to make a simpler and more effective terminal connection with the knife switch I have devised the structure shown clearly in Fig. 3. As here shown, the knife switch 22 is pivotally secured in the ears 23 on the bracket 24 which is bolted to the insulating posts adjacent one of the openings in that post which receives one of the high tension wires. A thimble 25 of conducting material is in alinement with the hole in the post so that when the wire is passed through the hole it will enter this thimble. The thimble has at its outer end an opening for the reception of the screw 26, and it will be understood that

to make electrical contact between the wire cable and this terminal thimble the wires in the cable are bent back over the insulation before the end is inserted in the thimble, and the screw 26 makes contact with the wires at the center of the cable, thus making good electrical contact between the high tension wire and the thimble. The thimble is provided with the conducting arm 27 which has an opening through which the pivot pin 28 of the knife switch passes. A thumb nut 29 secures this arm against one of the ears on bracket 24 and thus electrical connection is made between the high tension wire and the switch arm 22. It will be noted that the switch arm 22 may be bent upwardly as shown in Fig. 3 when this is necessary to properly reach the spark plug.

The knife switches being mounted as above described opposite the spark plugs are intended to be brought down against the contact points of the spark plug, but it has been found in practice that the parts are not always properly alined so that the knife switches will fit easily upon the contact point without bending. To bend the switch not only disfigures it, but impairs its efficiency. In order to avoid these defects and to insure the proper alinement of the switch and contact piece I have devised the adjustable contact piece which is most clearly shown in Figs. 6, 7 and 8. This contact piece embodies a main upright portion 30 having a base 31 in the shape of a washer which fits over the upper end of the screw threaded part 32 which in turn makes contact with the electrode of the spark plug. The thumb nut 33 on the part 32 binds the base 31 to the upper part of the spark plug-casing, and thus makes electrical connection between the contact piece and the electrode of the spark plug. On the upper end of the contact piece is the cylindrical head 34 which is adapted to fit between the two blades of the knife switch, and it will be observed that this cylindrical head is mounted on the contact piece not in line with the point of pivotal support on the part 32, but eccentrically. It is thus apparent that the head 34 may be moved from one side to the other by simply rotating the contact piece on its washer 31, and that thereby the head may be brought into proper position to be engaged by the knife switch without bending. In the form shown in Fig. 8 the contact piece has been strengthened by upwardly extending portions on both sides of the lower washer. The adjustable contact piece for bringing about an alinement with the knife switch can be applied to wires mounted in the way heretofore in common use as shown in Figs. 4 and 5.

Having thus described the invention, what is claimed is:

1. In an ignition system for hydrocarbon engines, the combination with the engine cylinders, of spark plugs thereon, high tension conducting wires supported above one another in an upwardly extending plane adjacent said plugs, each wire being inclined downwardly, switches for making contact with the spark plugs, and means for connecting the lowest wire adjacent each plug with the switch for that plug.

2. In an ignition system for hydrocarbon engines, the combination with the engine cylinders, of spark plugs thereon, posts on said cylinders adjacent said plugs, means on said posts for supporting high tension wires above one another and at an inclination to the horizontal, switches for making contact with the spark plugs, and means at each post for connecting the lowest wire with the corresponding switch.

3. In an ignition system for hydrocarbon engines, the combination with the engine cylinders, of spark plugs thereon having contact points, insulating posts on said cylinders adjacent said plugs, knife switches mounted on said posts in a position to make contact with the spark plugs, high tension wires carried by said posts and extending diagonally downward above one another, and means for connecting the terminal of the lowest wire at each post with the knife switch of that post.

4. In an ignition system for hydrocarbon engines, the combination with the engine cylinders, of spark plugs thereon, insulating posts on said cylinders adjacent said plugs provided with means for supporting wires one above the other, knife switches pivotally secured to said posts adjacent the lowest wire supporting means, and adapted to make contact with the corresponding spark plugs, and a wire terminal on each post for the lowest wire electrically connected to the knife switch on that post.

5. In an ignition system for hydrocarbon engines, the combination with the engine cylinders, of spark plugs thereon, insulating posts on said cylinders adjacent said plugs provided with means for supporting wires one above the other, knife switches pivotally secured to said posts adjacent the lowest wire supporting means and adapted to make contact with the corresponding spark plugs, a thimble-shaped conducting terminal for the end of the lowest wire on each post, and a conducting arm connecting said terminal with the switch on that post.

6. In an ignition system for hydrocarbon engines, the combination with the engine cylinders, of spark plugs thereon, insulating posts on said cylinders adjacent said plugs provided with means for supporting wires one above the other, knife switches pivotally secured to said posts adjacent the lowest wire supporting means and adapted to make contact with the corresponding spark plugs,

a thimble-shaped conducting terminal for the end of the lowest wire on each post, a conducting arm rigidly secured to said terminal having an eye adapted to fit over the pivot pin of the knife switch, and a thumb nut, for clamping said arm in place on the pivot pin.

7. In an ignition system for hydrocarbon engines, the combination with the engine cylinders, of spark plugs thereon having contact points, insulating posts on said cylinders adjacent said plugs, knife switches mounted in said posts in a position to make contact with the spark plugs, high tension wires carried by said posts and extending diagonally downward, means for connecting the terminal of the lowest wire at each post with the knife switch of that post, and means for adjusting the contact point of the spark plug into proper alinement with the knife switch.

8. In a device of the class described, the combination with a post having a hole therethrough for supporting a conducting cable, of a thimble-shaped conducting terminal adapted to fit over the end of said hole, a bracket secured to said post adjacent said hole having projecting ears, a knife switch secured to said bracket by a pivot pin passing through said ears, a conducting arm rigidly secured to said terminal having an opening fitting over the end of the pivot pin, and a thumb nut for securing said arm on the pin.

9. In a device of the class described, the combination with a pivoted knife switch, of a spark plug adjacent thereto having a contact point adapted to be engaged by the switch, and means for adjusting said contact point laterally on said plug into alinement with the switch.

10. In a device of the class described, the combination with a knife switch, of a pivotal support therefor permitting it to move in a single plane, a fixed spark plug adjacent thereto having a contact point adapted to be engaged by the switch, and means for adjusting said contact point laterally on said plug into alinement with the switch.

11. In a device of the class described, the combination with a pivoted knife switch, of a spark plug adjacent thereto, a contact member pivotally mounted on said plug substantially in line with the knife switch, and a contact point on said member eccentric to the pivotal point of support and adapted to be brought into alinement with said switch, for engagement therewith, by rotation of said member on its pivotal support.

12. In a device of the class described, the combination with a pivoted knife switch, of a spark plug adjacent thereto, a screw threaded extension of the electrode of said plug, a contact member having an opening fitting said extension, and pivotally supported thereon, a thumb nut on said extension for clamping the member in position, and a contact point on said member eccentric to the pivotal support and adapted to be brought into alinement with said switch, for engagement therewith, by rotation of said member on its pivotal support.

In testimony whereof I affix my signature in presence of two witnesses.

MILTON TIBBETTS.

Witnesses:
HOWARD HARKNESS,
L. C. TENNEY.

Copies of this patent may be obtained for five cents each, by addressing the "Commissioner of Patents, Washington, D. C."

TRUCK

R. HUFF.

TRUCK BRAKE.

APPLICATION FILED MAY 7, 1908.

1,098,576.

Patented June 2, 1914.

4 SHEETS—SHEET 1.

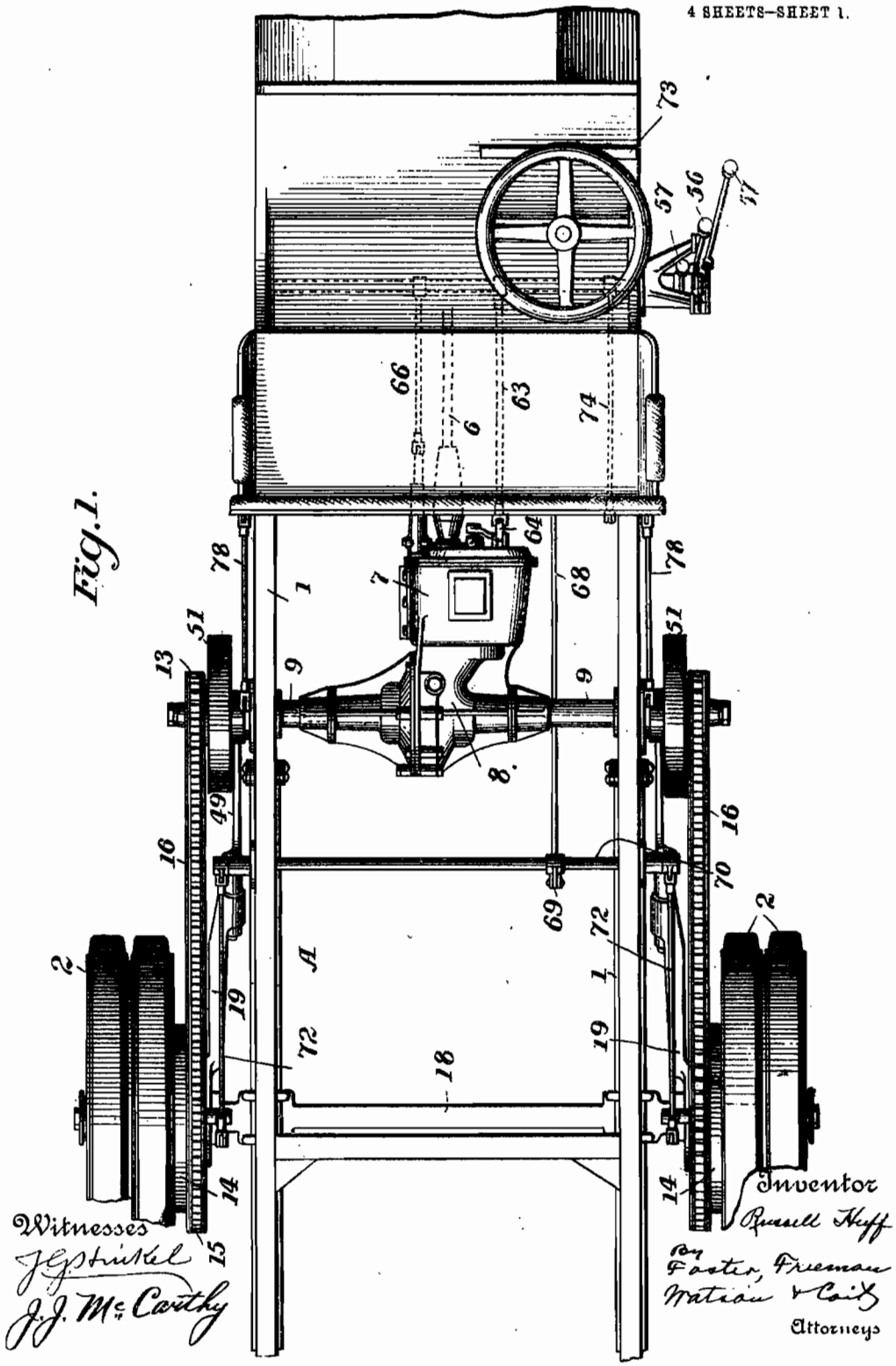

Fig. 1.

Witnesses
J. G. Strickel
J. J. McCarthy

Inventor
Russell Huff
By Foster, Freeman Watson & Coit
Attorneys

R. HUFF.

TRUCK BRAKE.

APPLICATION FILED MAY 7, 1908.

1,098,576.

Patented June 2, 1914.

4 SHEETS—SHEET 2.

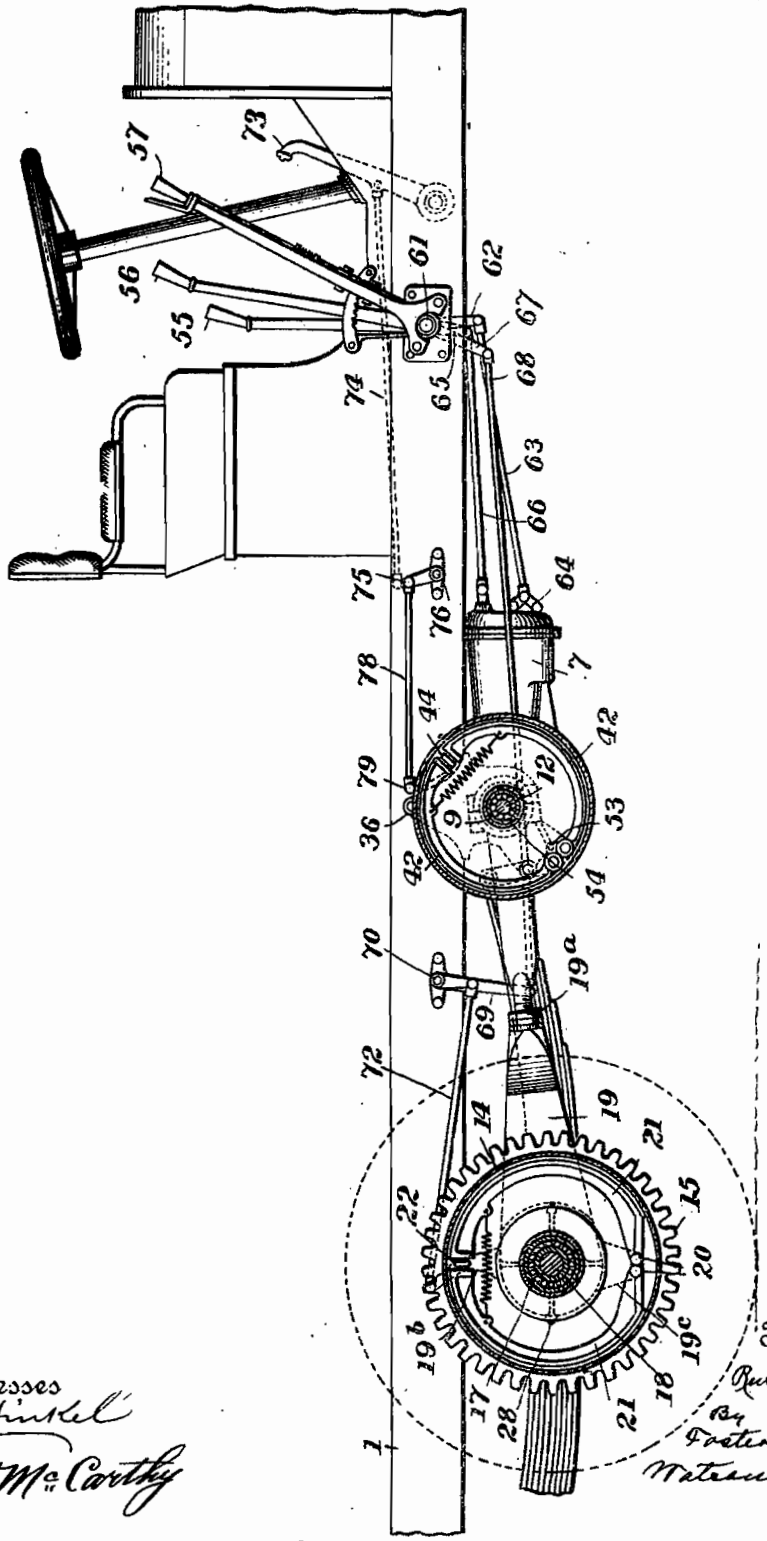

Fig. 2.

Witnesses
J. E. Stinkel
J. J. McCarthy

Inventor
Russell Huff
By Foster, Freeman, Watson & Coit
Attorneys

R. HUFF.

TRUCK BRAKE.

APPLICATION FILED MAY 7, 1908.

1,098,576.

Patented June 2, 1914.

4 SHEETS—SHEET 3.

Fig. 3.

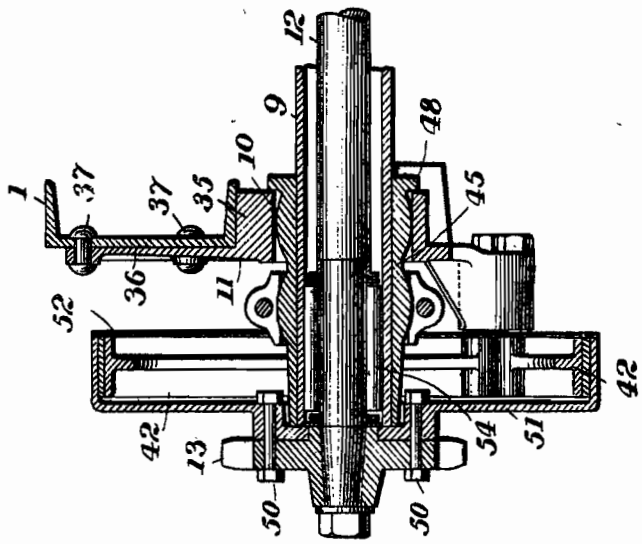

Fig. 4.

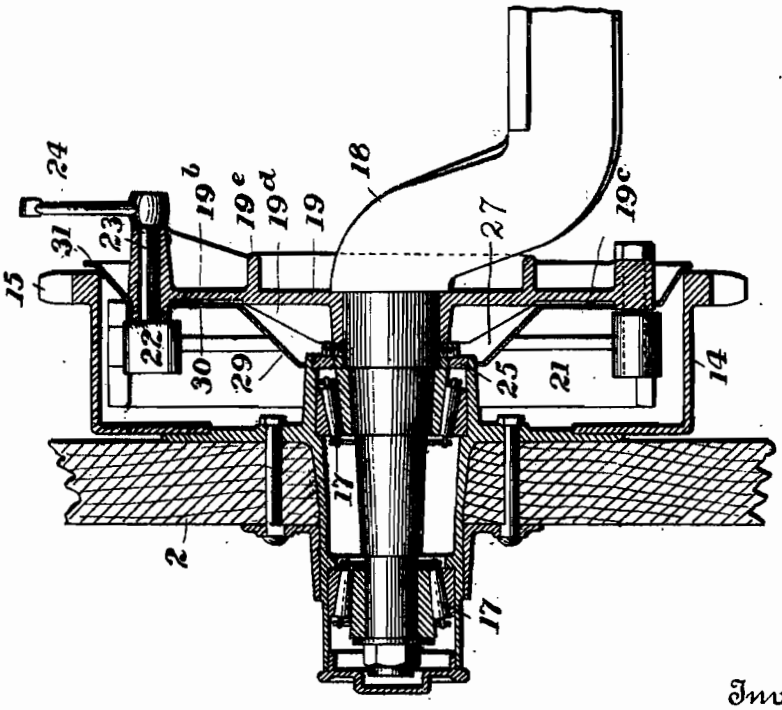

Witnesses

F. G. Stinkel

J. J. McCarthy

Inventor

Russell Huff

By

Foster, Freeman, Watson & Coit

Attorneys

R. HUFF.

TRUCK BRAKE.

APPLICATION FILED MAY 7, 1908

1,098,576.

Patented June 2, 1914.

4 SHEETS—SHEET 4.

Fig. 8.

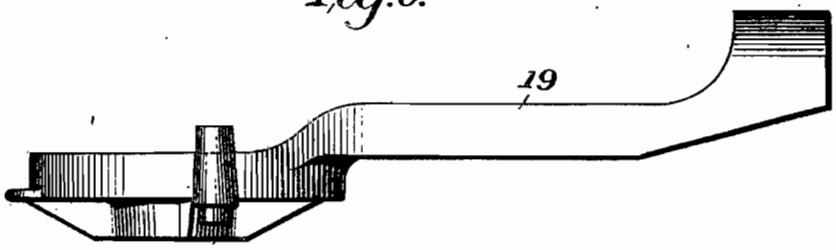

Fig. 6.

Fig. 7.

Fig. 5.

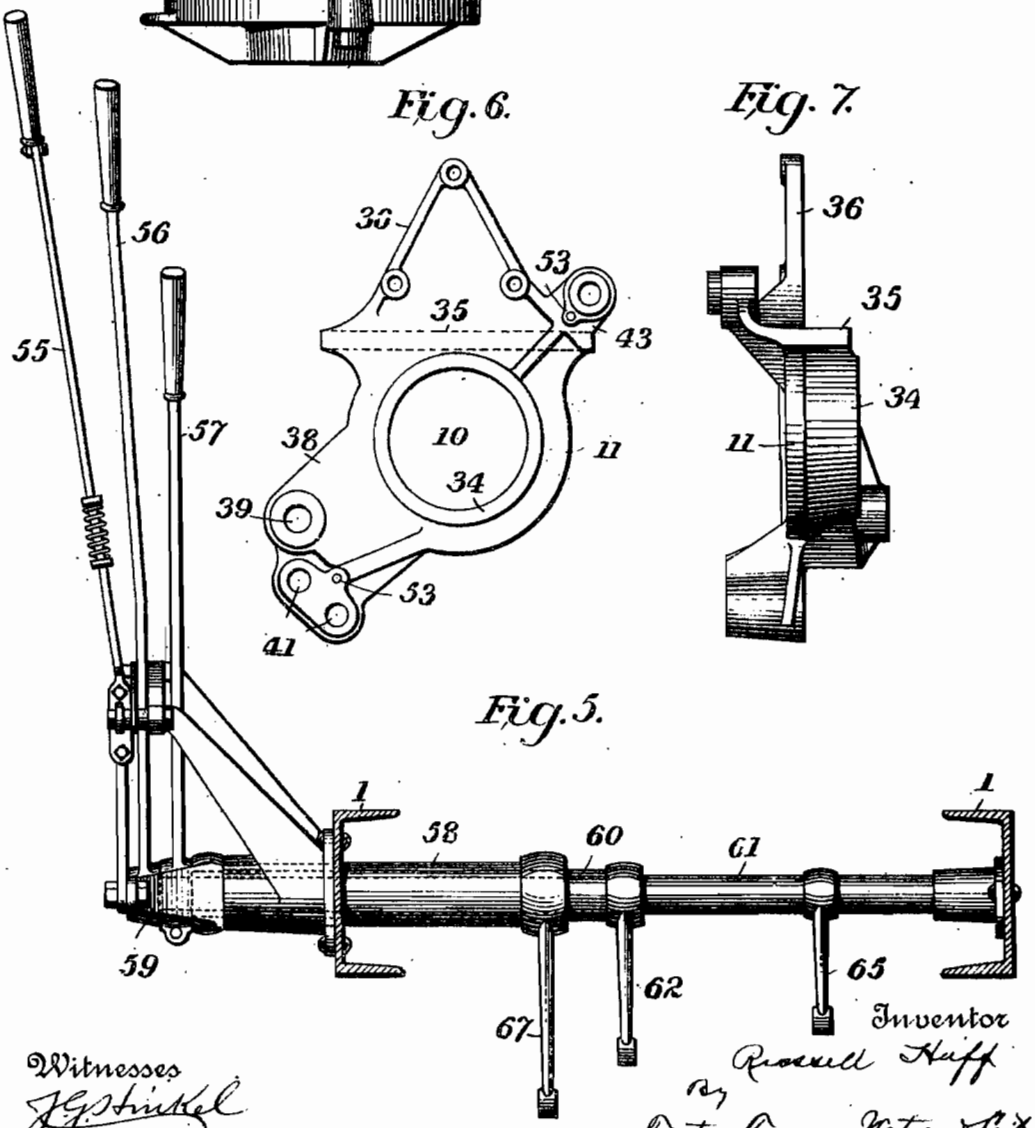

Witnesses

J. G. Stinkel

J. J. McCarthy

Inventor

Roswell Huff

By

Foster, Freeman, Watson & Coit

Attorneys

UNITED STATES PATENT OFFICE.

RUSSELL HUFF, OF DETROIT, MICHIGAN, ASSIGNOR, BY MESNE ASSIGNMENTS, TO PACKARD MOTOR CAR COMPANY, OF DETROIT, MICHIGAN, A CORPORATION OF MICHIGAN.

TRUCK-BRAKE.

1,098,576. Specification of Letters Patent. Patented June 2, 1914.

Application filed May 7, 1908. Serial No. 431,386.

To all whom it may concern:

Be it known that I, RUSSELL HUFF, a citizen of the United States, residing at Detroit, in the county of Wayne and State of Michigan, have invented certain new and useful Improvements in Truck-Brakes, of which the following is a specification.

My invention relates to motor vehicles, and consists in certain improvements in the construction and arrangement of the various parts, as fully set forth hereinafter and as illustrated in the accompanying drawing, in which:

Figure 1 is a plan of the frame and driving gear and connections of a motor vehicle embodying my improvements; Fig. 2 is a sectional elevation; Fig. 3 a transverse vertical section showing the parts adjacent to the jack-shaft at one end of the car; Fig. 4 is a transverse vertical section showing the parts adjacent to one of the drive wheels; Fig. 5 is a transverse view illustrating the arrangement of the operating levers and shafts; Figs. 6 and 7 are respective side and edge views of one of the supporting brackets; Fig. 8 is a top edge view of one of the radius arms.

My invention is shown applied to a truck having a main frame made up of the side angle bars 1 and similar end pieces, and supported by springs from the ordinary axles, carried by wheels 2. Supported from the side bars 1 by brackets 11 in advance of the rear wheels is the jack shaft 12 which is to be driven by an explosive engine (not shown) mounted on the forward part of the frame. The jack shaft has on its ends outside of the frame, sprocket wheels 13, which are operatively connected to the sprocket wheels 15 on the rear wheels by sprocket chains 16. According to my invention there are separate friction brakes on the jack shaft and the rear wheels, mounted as hereafter described and operated by novel means from the forward part of the truck where the operator sits.

As shown in Fig. 1, the drive shaft 6 which is adapted to be rotated by an engine on the forward part of the frame, enters the casing 7 which contains the usual change speed gears. Integrally formed with this casing is the casing 8 of the jack shaft differential, which last casing has the integral extensions 9 which form sleeves surrounding the divided jack shaft 12. The sleeves 9 (see Fig. 3) pass through cylindrical openings 10 in the brackets 11 secured to the side bars 1, and at the point where they pass through said openings they have bearing members 45 which are preferably shrunk on the ends of the sleeves. These bearing members have circumferential ridges curved in longitudinal section, closely fitting within the cylindrical openings 10, furnishing a flexible bearing which avoids any distortion of the casing by any warping or twisting of the frame. The bearing members 45 are further provided with flanges 48 which bear against the brackets 11 and prevent longitudinal displacement.

By reference to Fig. 3 it will be noticed that the jack shaft 12 which is supported by roller bearings 54 extends slightly beyond the end of sleeve 9 and bearing 45 and has secured to its ends the sprocket wheel 13. Secured on the inside of sprocket wheel 13 by bolts 50 is a brake drum 51 which surrounds the outer end of sleeve 9 and bearing 45. Expansible brake shoes 42 within this drum are carried by and secured to brackets 11.

The form of bracket 11 is clearly shown in Figs. 6 and 7, and it will be observed therefrom that in addition to the cylindrical portion 34 forming openings 10 the bracket has the horizontal flange or ledge 35 just above the openings 10 and the upright flange 36 at right angles to the cylindrical portion 34, and that thus the bracket is adapted to closely fit the bottom and side of the side bar 1, and to be secured thereto by bolts 37. The bracket has upon its lower part, but to one side, the arm 38 which is provided with openings 39 for the front shackle of the spring for the rear wheel, and also with the two openings 41 from which the two brake shoe members 42 are pivotally supported. On the upper part of the bracket, but on the side opposite the arm 38 is a boss 43 in which is journaled the shaft of the brake operating cam 44. It will be observed that the cam 44 is between the free ends of the brake shoes 42, and when turned it will separate those ends and force the

shoes into frictional engagement with the drum 51. The diagonal arrangement of the supports for the brake shoe and operating cam on the bracket makes a very compact and strong structure and saves material.

A dust shield 52 is provided to close the inner open side of the brake drum 51, and this shield is in the shape of an annular disk held in place by screws 53 secured to bracket 11. The disk is of course provided with suitable openings for the bosses in which the brake shoes and operating cam are pivoted. The rear wheels 2 are mounted on the rear axle 18, suitable roller bearings 17 being provided between the parts. Bolted to the inner face of the spokes or hub of each rear wheel is a brake drum 14 which carries at its inner edge sprocket teeth 15 adapted to receive the drive chain 16. The rear wheels are therefore driven by the sprocket chains from the jack shaft.

The brake drum 14 is open on its inner side and the brake shoes 21 fit within it and are adapted to be expanded against its inner surface. The brake shoes are supported on the part marked 19 which extends forwardly and is connected by rod 49 with the jack shaft to form what are ordinarily termed radius rods. The parts 19 and 49 have adjustable connecting means 19^a by which the length of the radius rod may be changed. The part 19 is supported at its rear end by the rear axle 18 which passes through it, as shown in Fig. 4. The rear end of the part 19 has the upwardly and downwardly extending arms 19^b and 19^c for supporting the brake mechanism, the pivot supports for brake shoes 21 being at 20 in the arm 19^c. Between the upper free ends of the shoes is the operating cam 26 pivoted in arm 19^b at 23 and connected to this cam is the arm 24 which is operated as hereafter described. Stiffening ribs or flanges 19^d and 19^e may be arranged on the outer and inner surfaces of the part 19. The forward end of the part 49 fits a semi-spherical bearing surface on the member 45 (see Fig. 3), thus forming a universal joint.

To exclude the dust from the interior of drum 14 and to prevent the oil or grease which gets past the packing 25 of the rear wheel hub from dropping onto the brake shoes and thus interfering with their operation there is provided a dust guard 27 which is attached to the radius rod 19 as by screws 28. This guard comprises a conical inner portion 29 arranged close to the wheel hub, an intermediate flat portion 30, and an outer conical portion 31, the outer edge of which passes out of the drum close to the sprocket wheel 15. The guard therefore prevents dust from entering the brake drum, and it will be apparent that any oil which passes the packing 25 will drip into the inner conical part of the shield and will after passing over the outer conical part 31, drop to the ground, or be picked up by the chain 16, and will thus lubricate the chain. The dust guard will of course be provided with openings to fit around the bosses of the arms 19^b, 19^c.

The brakes as well as the change speed and reverse gears are to be operated from points adjacent the driver's seat at the forward part of the vehicle, and I have devised improved means for mounting the operating levers. It will be seen by reference to Fig. 2 that the reverse gear is operated through arm 62, link 63 and toggle 64, the arm 62 being rigidly secured to the cross shaft 60 having a hand operated lever 57. The change speed gear is operated by an arm 65 and link 66, the arm being secured to cross shaft 61 having the operating hand lever 56. The brake on the rear wheel is operated by shaft 58, having the hand lever 55, and its motion is transmitted to the brake by means of the arm 67, link 68, arm 69 on the supplemental rock shaft 70, link 72, and arm 24 secured to the brake operating cam 22. The brake on the jack shaft is operated by the foot lever 73, link 74, arm 75 pivoted on rock shaft 76, link 78 and arm 79 of the brake operating cam 44.

It will be seen by reference to Fig. 5 that the brake lever 55, change speed lever 56 and reversing lever 57 are journaled concentrically on a transverse rock shaft. This is a desirable arrangement and it is also desirable that the brake lever be on the outside or the one farthest away from the frame. It is further desirable that the rock shaft or tube which the brake lever operates should be the strongest of the three rock shafts, for the reason that very little power is required to operate the change speed and reverse gearing, whereas considerable power is necessary in the operation of the brakes. With the three shafts concentrically nested as described, the connections for the operating levers would ordinarily be made in such a way that the innermost shaft would be the one connected with the outermost lever, and consequently the brake lever, if placed at the outside, would be connected to the weakest shaft. In order to avoid this and to still maintain the brake lever on the outside, the outside or strongest of the rock shafts 58 is provided on its outer end with a pair of curved arms 59 extending around and beyond the ends of the other two shafts 60 and 61. The lower end of the brake lever 55 is secured to the outer ends of these arms 59 and the brake lever is thus connected with the strongest outside rock shaft.

While I have shown in detail only one section of the divided jack shaft it is to be understood that the other section extending

to the other side of the vehicle is similar. It is further to be understood that the supporting brackets, brakes, chains, radius rods and other connecting parts are the same on both sides of the vehicle and operate simultaneously.

Without limiting myself to the construction and arrangements shown, I claim:

1. The combination of jack-shaft sections, intermediate differential gear, a casing inclosing the gear and the shafts, the ends of the latter extending beyond the casing, a sprocket wheel and brake-drum carried by the projecting end of each shaft, and a radius bar recessed to receive and swinging about the end of the adjacent hollow arm of the casing.

2. The combination of jack shaft sections, intermediate differential gear, a casing inclosing the gear and the shafts, hollow bearing members for the latter extending beyond the casing and having annular transversely curved bearings, and radius bars recessed to fit said bearings, and a sprocket wheel and brake-drum carried by the projecting end of each shaft.

3. The combination with jack-shaft sections and intermediate differential gear, of a casing inclosing the gear and with arms inclosing the shaft except at the ends, and brake-drums secured to said ends and having side bearings against the ends of the said arms, and sprocket wheels carried by the ends of the shafts and connected to the adjacent brake drums.

4. The combination with the frame and jack-shaft of a motor vehicle, of a casing having hollow arms inclosing the jack-shaft, and sleeves on said arms each with two annular rounded bearings adapted respectively to openings in brackets attached to the frame and in radius bars.

5. The combination with the frame, rear axle, and jack shaft of a motor vehicle, and radius rods recessed to receive the axle, a casing for the jack shaft having direct connection with the radius rods, and brackets on the frame flexibly supporting said casing.

6. The combination with the frame, rear axle, and jack shaft of a motor vehicle, and radius rods recessed to receive the axle, a casing for the jack shaft having direct universal joint connection with the radius rods, and brackets on the frame flexibly supporting said casing.

7. The combination with the frame and jack-shaft of a motor vehicle, of brackets supporting said shaft, brake drums on the jack-shaft, brakes and operating means therefor supported by said brackets, brake members within each drum supported each at one end by the bracket, a cam between the free ends of the members, and a cam spindle supported to work in the bracket.

8. The combination with the frame and jack-shaft of a motor vehicle, of brackets connected with the frame and flexibly supporting said shaft and each provided with means independent of said shaft for connecting thereto the ends of supporting springs of the vehicle.

9. The combination with the frame and jack-shaft of a motor vehicle, of brackets connected with the frame and flexibly supporting said shaft and each provided with means independent of said shaft for connecting thereto eccentrically of said shaft the ends of supporting springs of the vehicle.

10. The combination with the frame and jack-shaft of a motor vehicle, of brackets connected with the frame and flexibly supporting said shaft and each provided with arms extending rearward and recessed to receive bolts for connecting thereto the ends of supporting springs of the vehicle.

11. The combination with the frame, of brackets connected thereto and supporting the jack-shaft thereof, each with a rearwardly extended arm recessed to receive bolts for connecting thereto the ends of brake members and the supporting spring of the vehicle.

12. The combination with the frame, of brackets connected thereto and supporting the jack-shaft thereof, each with a rearwardly extended arm recessed to receive bolts for connecting thereto the ends of brake members and of a supporting spring of the vehicle, and with a bearing for a brake operating spindle.

13. A bracket for motor vehicles having a web adapted to the side of the side bar of the vehicle, and a flange adapted to the bottom of said side bar, with a transverse tubular recess for bearings of the jack-shaft casing, and projecting arms recessed to receive bolts supporting brake levers and a spindle for operating the brake.

14. A bracket for motor vehicles having a web adapted to the side of the side bar of the vehicle, and a flange adapted to the bottom of said side bar, with a transverse tubular recess for bearings of the jack-shaft casing, and diagonally projecting arms recessed to receive bolts supporting brake levers and a spindle for operating the brake.

15. The combination with the frame, rear axle, drive wheels and sectional jack-shaft of a vehicle, of brake drums on the axle and shaft sections, and radius bars recessed to receive the rear axle of the vehicle also recessed to receive the jack-shaft at points adjacent to its brake drums.

16. The combination with the frame, rear axle, drive wheels and sectional jack-shaft of a vehicle, of brake drums on the axle and shaft sections, and radius bars recessed to receive the rear axle of the vehicle also re-

cessed to receive the jack-shaft sections at points adjacent to its brake drums, and brake operating appliances carried by the radius bar adjacent to the drum of each drive-wheel.

17. The combination with the frame, rear axle drive wheels and jack shaft of a motor vehicle, of a casing having hollow arms inclosing the jack-shaft and radius bars each recessed to receive the rear axle and one of the said hollow arms at a point outside the vehicle frame.

18. The combination with the frame, rear axle drive wheels and jack-shaft of a motor vehicle, of a casing having hollow arms inclosing the jack shaft and radius bars each recessed to receive the rear axle and having a rocking bearing on the hollow arms at a point outside the said frame.

19. The combination with the frame of a motor vehicle and recessed brackets thereon, of a jack-shaft, a casing provided with hollow arms inclosing said shaft, and rounded bearings on said arms fitted to work in recesses on said brackets and other rounded bearings on said arms adapted to recesses in the forward ends of radius bars.

20. The combination with the frame of a motor vehicle and recessed brackets thereon, of a jack-shaft, a casing provided with hollow arms inclosing said shaft, and rounded bearings on said arms fitted to work in recesses on said brackets and other rounded bearings on said arms outside of said frame adapted to recesses in the forward ends of radius bars.

21. The combination with the frame, rear axle and drive wheels, jack shaft and casing therefor, brackets on the frame flexibly supporting said casing, and sprockets on the wheels and jack shaft ends respectively, of radius rods recessed at both ends to receive respectively the rear axle and the jack shaft casing at points adjacent said sprockets.

In testimony whereof I affix my signature in presence of two witnesses.

RUSSELL HUFF

Witnesses:

HOWARD HARKNESS,

CLARA I. DALE.

C. J. MOORE.

ROBE SUPPORT.

APPLICATION FILED MAY 16, 1908.

1,143,772. Patented June 22, 1915.

Fig. 1.

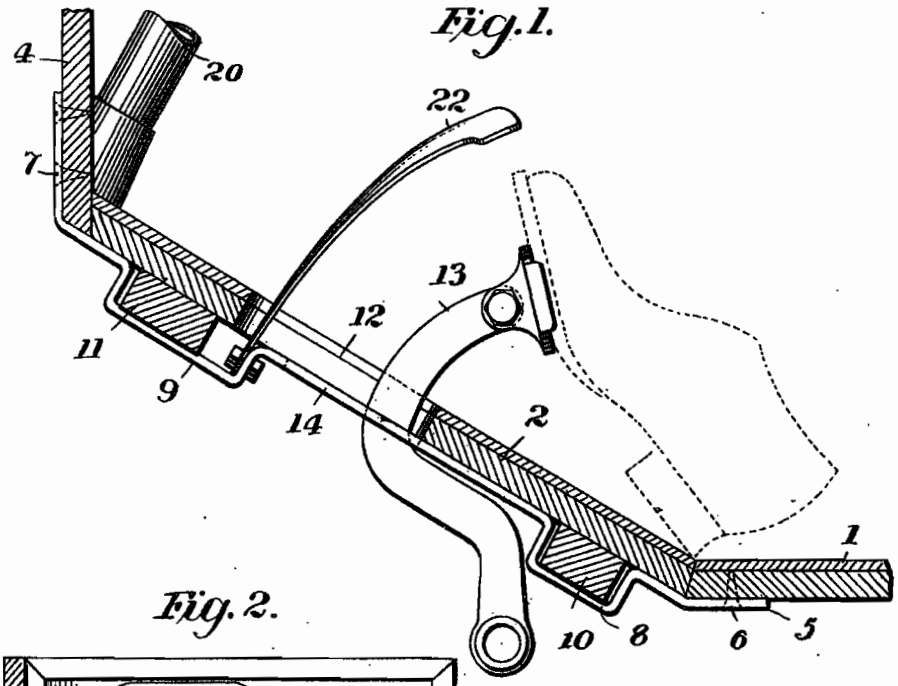

Fig. 2.

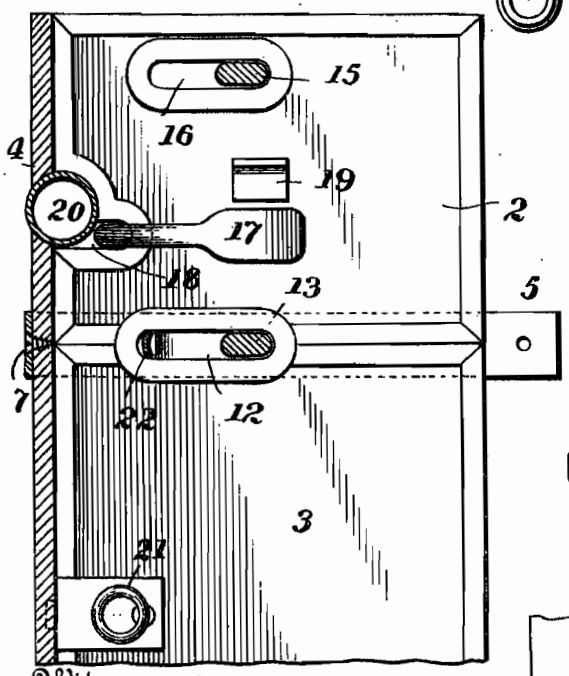

Fig. 3.

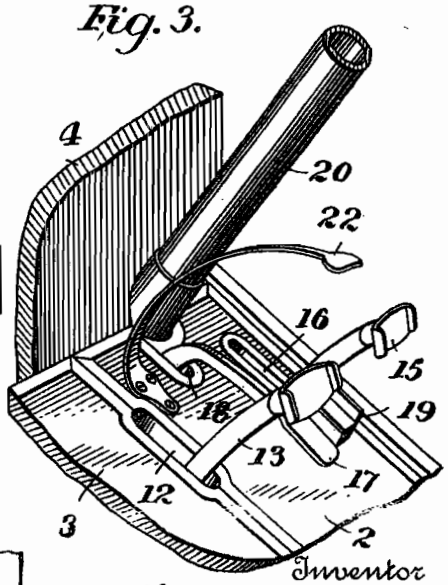

Fig. 4.

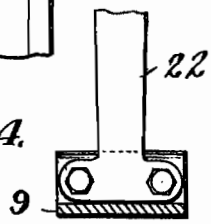

Witnesses
J. G. Finkel
J. J. McCarthy

Inventor
Charles J. Moore
By
Foster, Freeman, Watson & Coit
Attorneys

THE NORRIS PETERS CO., PHOTO-LITHO., WASHINGTON, D. C.

UNITED STATES PATENT OFFICE.

CHARLES J. MOORE, OF DETROIT, MICHIGAN, ASSIGNOR, BY MESNE ASSIGNMENTS, TO PACKARD MOTOR CAR COMPANY, OF DETROIT, MICHIGAN, A CORPORATION OF MICHIGAN.

ROBE-SUPPORT.

1,143,772. Specification of Letters Patent. Patented June 22, 1915.

Application filed May 16, 1908. Serial No. 433,309.

To all whom it may concern:

Be it known that I, CHARLES J. MOORE, a citizen of the United States, and residing at Detroit, in the county of Wayne and State of Michigan, have invented certain new and useful Improvements in Robe-Supports, of which the following is a specification.

This invention relates to motor vehicles, and particularly to means for supporting the robe or duster above the feet of the driver, so that the said robe or duster will not become entangled with the feet of the driver, and interfere with the proper operation of the controlling pedals of the machine.

It consists of a support of suitable form fastened to any convenient portion of the vehicle, projecting upwardly in advance of the pedals, and terminating approximately above them.

The invention will be fully understood from the following description taken in connection with the accompanying drawings.

In the drawings,—Figure 1 is a longitudinal section through a portion of the floor of a motor vehicle, showing my robe support in place; Fig. 2 is a plan view of what is shown in Fig. 1; Fig. 3 is a perspective view of a portion of the floor of a motor vehicle, showing a modified form of robe support; and Fig. 4 is a detail view of the means for fastening the support in place.

When the robe or duster which is ordinarily used in motor vehicles is allowed to drop from the driver's knees, over his feet, it is liable to become entangled with the controlling pedals, and to interfere with the proper operation of those pedals by the driver. According to my invention I place slightly in advance of the pedals an attachment which is in the shape of a curved support over which the robe or duster is to be placed, and by this means the robe or duster is held out of contact with the pedals, and does not interfere with the free movement of the feet of the driver. This attachment may be easily and conveniently applied to any ordinary motor vehicle and may be secured either to the floor, the frame, or the dash, as desired.

In the drawings, 1 represents the stationary horizontal floor board which is ordinarily used in motor vehicles.

2 and 3 represent the inclined floor boards which connect the stationary board 1 with the vehicle dash 4. The board 2 is ordinarily made stationary, and the board 3 removable, but it will be understood that the board 2 may also be removable. These two boards are supported at their outer edges by side sills on the vehicle frame, and at their inner edges they are supported by the metal strip 5 which is secured at one end to the board 1 by screws 6, and at its other end to the vehicle dash by screws 7. This metal strip overlaps the edges of the boards 2 and 3 and is provided with the depressions 8 and 9 to receive the strengthening cleats 10 and 11 on the under surface of the board 2. The meeting edges of the boards 2 and 3 are cut away at opposite points to form a slot 12 through which projects the clutch pedal 13, it being understood that there is a slot 14 in the strip 5 through which this pedal passes.

The brake pedal 15 passes through slot 16 in the board 2, and the accelerator pedal 17 passes through an opening 18 in the board 2. By the side of the end of the pedal 17 there is placed a rest 19 to support the foot of the driver, so that he may regulate the operation of this pedal nicely. The steering column 20 passes through the forward edge of the board 2 and is secured to the vehicle dash. The board 3 is secured in place by means of a catch operated by the ring 21, which ring serves as a means for raising the board.

As shown in Figs. 1 and 2, my robe support 22 is secured to the vertical portion of the depression 9 in the strip 5, and projects upwardly and rearwardly through the slot 12, formed between the edges of the boards 2 and 3. This places the support directly in advance of the clutch pedal, and since it terminates approximately above that pedal it will serve to keep the robe out of contact with it. This is my preferred means for securing the support in place, and it will be understood that I prefer to make the support of metal and of substantially the shape shown, although these features may be modified without departing from my invention. The movable board 3 is ordinarily raised by ring 21 so that it turns about the point of connection with the stationary board 1, as a pivot, and it will be observed

that the curvature of the support 22 is such that the board may be so turned without interfering with the support.

In the modified form shown in Fig. 3, my support consists merely in a curved metal strip fastened directly to the floor board in advance of the pedals by means of screws.

What I claim is:

1. In a motor vehicle, the combination with floor boards having a slot therein, of a controlling pedal projecting through said slot, and a robe support projecting through said slot in advance of the pedal.

2. In a motor vehicle, the combination with the floor boards having a slot formed between their meeting edges, one of said boards being movable, of a controlling pedal projecting through said slot, and a robe support secured to the vehicle and projecting through said slot in advance of the pedal.

3. In a motor vehicle, the combination with the floor boards having a slot formed between their meeting edges, one of said boards being movable, of a controlling pedal projecting through said slot, a supporting strip below the meeting edges of the floor boards provided with a slot for the controlling pedal, and a robe support secured to said strip and projecting upwardly through the slot in the floor boards.

4. In a motor vehicle, the combination with a movable floor board provided with a slot, of a support for said board provided with a slot, a controlling pedal extending through said slots, and a robe support passing through the slot in the board and secured to the support.

5. In a motor vehicle, the combination with the floor boards having a slot formed between their meeting edges, one of said boards being movable, of a controlling pedal projecting through said slot, transverse strengthening cleats on the under surface of one of said boards, a supporting strip below the meeting edges of the floor boards provided with depressions to receive the cleats, and a robe support secured to a vertical wall of one of said depressions and projecting upwardly through the slot in the floor boards.

In testimony whereof I affix my signature in presence of two witnesses.

CHARLES J. MOORE.

Witnesses:
L. C. TENNEY,
CLARA I. DALE.

Copies of this patent may be obtained for five cents each, by addressing the "Commissioner of Patents, Washington, D. C."

R. HUFF.

MOTOR VEHICLE.

APPLICATION FILED MAY 18, 1908.

915,769.

Patented Mar. 23, 1909.

2 SHEETS—SHEET 1.

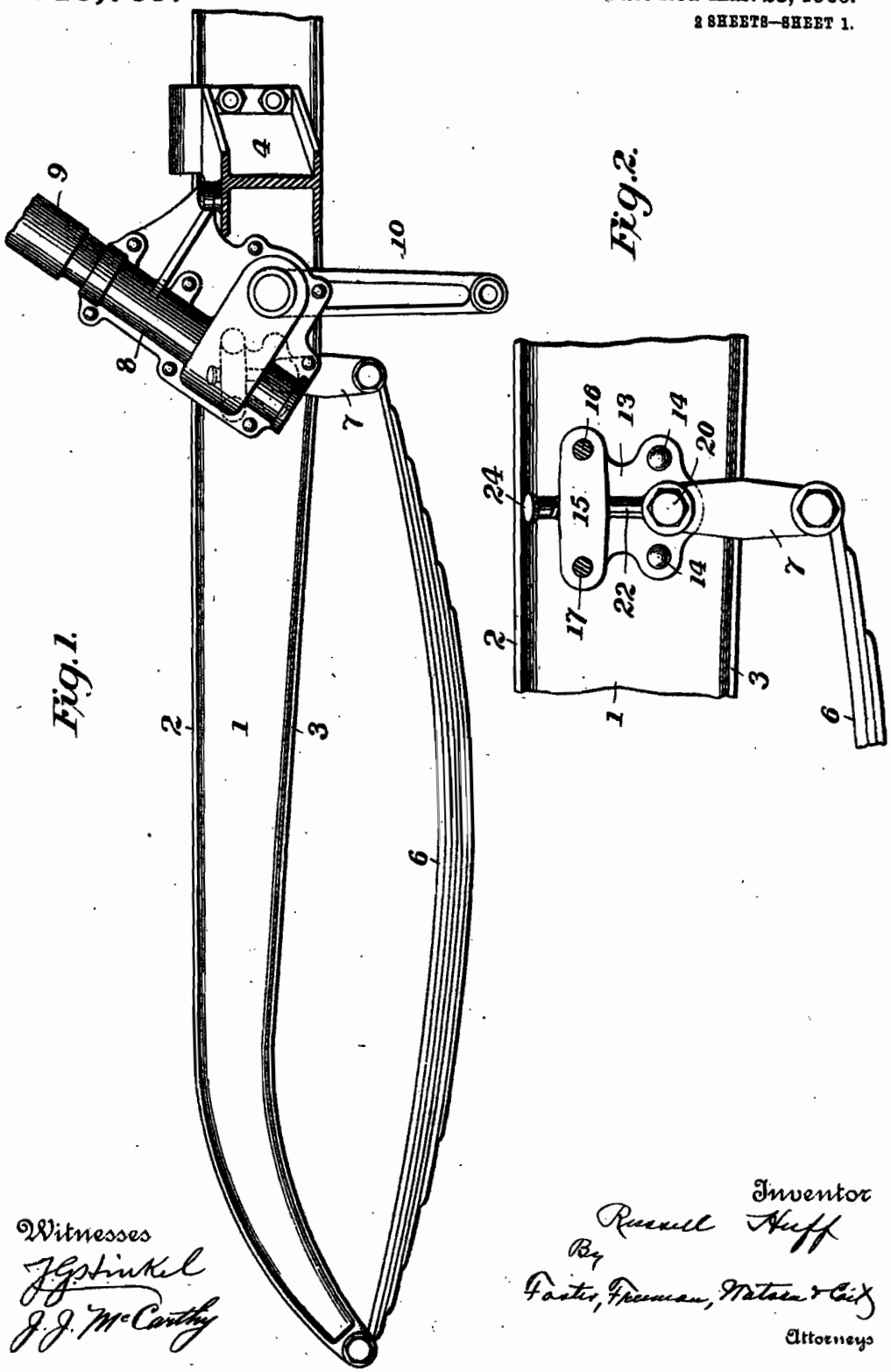

Witnesses

J. G. Stinkel

J. J. McCarthy

Inventor

Russell Huff

By

Foster, Freeman, Watson & Coit

Attorneys

THE NORRIS PETERS CO., WASHINGTON, D. C.

R. HUFF.

MOTOR VEHICLE.

APPLICATION FILED MAY 18, 1908.

915,769. Patented Mar. 23, 1909.

2 SHEETS—SHEET 2.

Fig. 3.

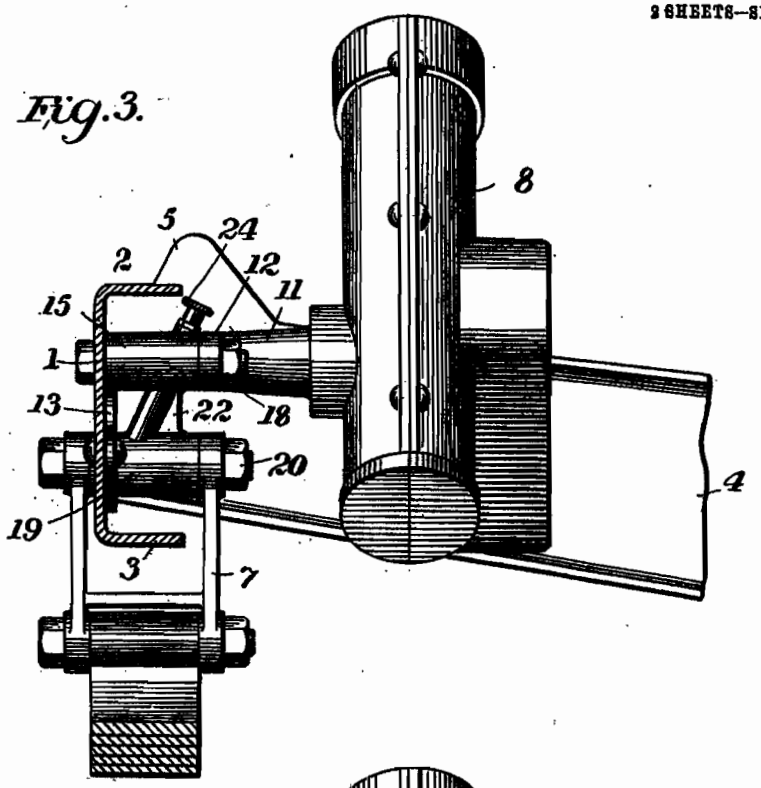

Fig. 4.

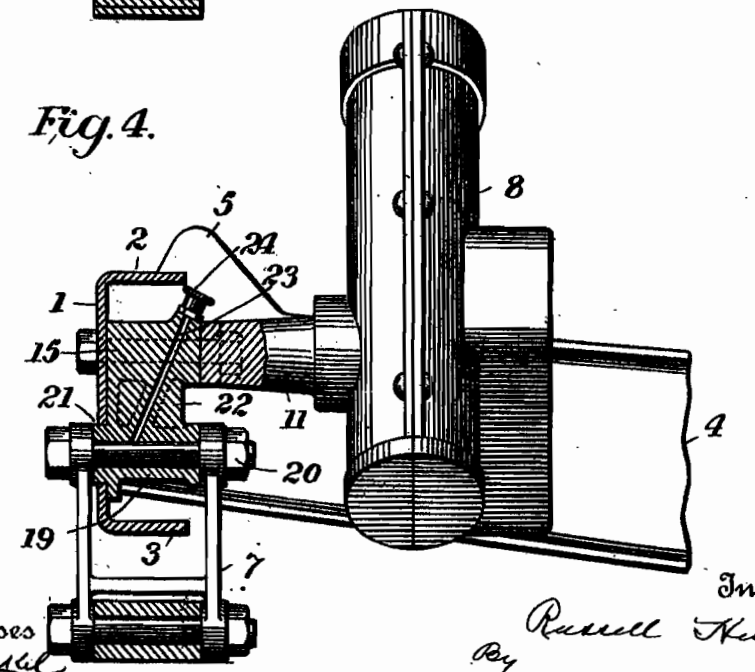

Witnesses

J. G. Lindel

J. J. McCarthy

Inventor

Russell Huff

By

Foster, Freeman, Watson & Coit

Attorneys

THE NORRIS PETERS CO., WASHINGTON, D. C.

UNITED STATES PATENT OFFICE.

RUSSELL HUFF, OF DETROIT, MICHIGAN, ASSIGNOR TO PACKARD MOTOR CAR COMPANY, OF DETROIT, MICHIGAN, A CORPORATION OF WEST VIRGINIA.

MOTOR-VEHICLE.

No. 915,769. Specification of Letters Patent. Patented March 23, 1909.

Application filed May 18, 1908. Serial No. 433,505.

To all whom it may concern:

Be it known that I, RUSSELL HUFF, a citizen of the United States, residing at Detroit, in the county of Wayne and State of Michigan, have invented certain new and useful Improvements in Motor-Vehicles, of which the following is a specification.

This invention relates to motor vehicles, and particularly to means for securing the rear end of the front spring and the steering gear casing to the side bar of the frame. Its objects are to simplify and improve the form of bracket used in securing these parts in place.

It embodies a single bracket to which the gear casing and spring are both attached, and its novel features will be apparent from the following description.

In the accompanying drawings—Figure 1 is a side view of the front portion of the side bar of the frame, showing my invention applied thereto; Fig. 2 is a detail view of the bracket, the gear casing being removed; Fig. 3 is a view partly in section, showing an end view of the bracket; and Fig. 4 is a section taken through the bracket itself and attached parts.

In the drawings, 1 represents the right side bar of the frame of a motor vehicle, which, as shown, is made in the ordinary form of a channel bar having the side flanges 2 and 3.

4 represents one of the transverse rear arms of the engine crank case which is secured to the side bar 1 and is provided with a lug 5 resting on the flange 2. The front spring 6 has at its rear end a shackle 7 which embraces the side bar 1 and is secured thereto by the means hereafter described. The steering gear casing 8 is of any ordinary form carrying the steering column 9 and including the ordinary gears operating the steering lever 10. This casing has an extension resting upon the arm 4 and has upon one side an arm 11 carrying at its outer end the perforated side ears or flanges 12 for the purpose of securing the casing to the supporting bracket hereafter described.

The bracket to which the casing and spring are secured embodies a web portion 13 which fits against the web portion of the side bar 1, and which is secured thereto by bolts or rivets 14. On the upper part of the web portion 13 there is an enlargement 15 which extends entirely across the top of the web and which projects therefrom to such an extent that its outer end will not be within the margin of the side flanges 2 and 3. This enlargement has the spaced longitudinal openings 16, 17 which are adapted to receive bolts 18 passing through the ears 12 on the arm 11. It will be understood that these bolts also pass through openings in the web of the side bar 1, and thus rigidly secure the casing, bracket and side bar together.

On the lower part of the web 13 and centrally thereof there is an enlargement 19 which is provided with a central longitudinal opening to receive the bolt 20 passing through the end of the shackle 7, and it will be observed by reference to Fig. 4 that there is a boss 21 on the opposite side of the web 13 in line with the enlargement 19, and that this boss fits within an opening in the side bar 1. The enlargements 15 and 19 are connected by a web 22 for the purpose of strengthening them and an oil passage 23 passes diagonally through the center of the enlargement 15 through the web 22 to the opening in the enlargement 19, it being observed that the web portion is enlarged around this passage. An oil cup 24 is secured to the upper end of this passage and supplies oil to the shackle bolt 20.

It will be observed that this bracket furnishes a fastening means for the casing and spring which is at once compact, convenient and strong, and which permits the shackle 7 to embrace the side bar furnishing pivotal connection therewith without permitting it to come in contact with the side bar.

It will be understood that the particular form of the bracket may be varied without departing from the spirit of my invention.

What I claim is:

1. In a motor vehicle, the combination with the frame side bar, the steering gear casing and the forward spring and its shackle, of a bracket secured to the side bar and provided in its lower part with an opening to receive the shackle bolt and in its upper part with means for attaching the steering gear casing.

2. In a motor vehicle, the combination with the frame side bar, the steering gear casing and the forward spring and its shackle, of

a bracket secured to the side bar and provided in its lower part with an opening to receive the shackle bolt and in its upper part with openings to receive bolts on the steering gear casing.

3. In a motor vehicle, the combination with the frame side bar, the steering gear casing and the forward spring and its shackle, of a bracket secured to the side bar and provided with a web portion fitting the side bar and with a perforated enlargement on its lower portion to receive the shackle bolt and with an enlargement on its upper portion having perforations to receive bolts on the steering gear casing.

4. In a motor vehicle, the combination with the frame side bar, the steering gear casing and the forward spring and its shackle, of a bracket secured to the side bar and provided with a web portion fitting the side bar and with a perforated enlargement on its lower portion to receive the shackle bolt and with an enlargement on its upper portion having perforations to receive bolts on the steering gear casing, and a strengthening web joining said enlargements.

5. In a motor vehicle, the combination with the frame side bar, the steering gear casing and the forward spring and its shackle, of a bracket secured to the side bar and provided with a web portion fitting the side bar and with a perforated enlargement on its lower portion to receive the shackle bolt and with an enlargement on its upper portion having perforations to receive bolts on the steering gear casing, and a strengthening web joining said enlargements, the said web being provided with an oil passage leading to the perforation in the lower enlargement.

6. In a motor vehicle, the combination with the side channel bar, the steering gear casing and forward spring and its shackle, of a bracket having a web adapted to fit within the channel bar and to be bolted thereto, the said web being provided with perforated enlargements adapted to receive the shackle bolt and bolts on the steering gear casing.

7. In a motor vehicle, the combination with the side channel bar, the steering gear casing and forward spring and its shackle, of a bracket fitting within the channel of said bar, the said bracket having an upper perforated portion and a lower perforated portion extending approximately to the edge of the flanges of said bar, and bolts passing through said perforations and through the web of the channel bar securing the shackle and the gear casing to said bracket.

8. In a motor vehicle, the combination with the side channel bar, of a bracket fitting against the web of said bar and extending to the margin of the side flanges, a steering gear casing fitting against said bracket, bolts passing through a portion of said casing, bracket and web securing the parts together, and a spring shackle depending from said bracket and secured thereto by a bolt.

9. In a motor vehicle the combination with the side channel bar, of a bracket fitting against the web of said bar and extending to the margin of the side flanges, a steering gear casing fitting against said bracket, bolts passing through a portion of said casing, bracket and web securing the parts together, a boss on the lower part of said bracket extending through an opening in the web, a bolt extending through an opening in said boss and bracket, and a spring shackle depending from said bolt.

10. In a motor vehicle, the combination with the side bar of the frame, of a bracket fitting against said side bar, a steering gear casing fitting against said bracket, bolts passing through said casing, bracket and side bar securing the parts together, and means for supporting a spring shackle from said bracket.

11. In a motor vehicle, the combination with the side bar of the frame, of a bracket fitting against said side bar and provided with an upper enlargement, a steering gear casing provided with an arm having side flanges fitting against said enlargement, bolts passing through said flanges, enlargement and side bar securing the parts together, and means for supporting a spring shackle from said bracket.

12. In a motor vehicle, the combination with the side bar of the frame, of a bracket fitting against said side bar and secured thereto, a steering gear casing secured to said bracket, a boss on the lower part of the bracket extending through the web of the side bar, a spring shackle embracing said bracket, and a bolt passing through said boss, bracket and shackle.

13. In a motor vehicle, the combination with the side bar of the frame, of a bracket fitting against said bar and bolted thereto, a boss on said bracket projecting through an opening in the bar, an enlargement opposite said boss, a spring shackle embracing said bracket, and a bolt passing through said boss and enlargement and supporting said shackle.

14. In a motor vehicle, the combination with the side channel bar, of a bracket having a web portion bolted to the web of said bar within the side flanges, the said bracket having upon one side a boss extending through the bar and upon the other side enlargements extending to the edges of the side flanges.

15. A bracket for motor vehicles, comprising a web portion provided with an enlargement upon one side on its upper portion having two passages therethrough, and an enlargement on its lower portion having a passage therethrough, and provided with a boss opposite the lower enlargement having a corresponding passage.

16. A bracket for motor vehicles, com-

prising a web portion provided with an enlargement upon one side on its upper portion having two passages therethrough, and an enlargement on its lower portion having a passage therethrough, and provided with a boss opposite the lower enlargement having a corresponding passage, a strengthening web joining the two enlargements having an oil passage therein leading to the passage in the lower enlargement.

In testimony whereof I affix my signature in presence of two witnesses.

RUSSELL HUFF.

Witnesses:

ALLEN LOOMIS,

HOWARD HARKNESS.

280/19 BEST AVAILABLE COPY

DESIGN.

No. 39,488. PATENTED SEPT. 1, 1908.

R. HUFF.

VEHICLE BODY.

APPLICATION FILED MAY 29, 1908.

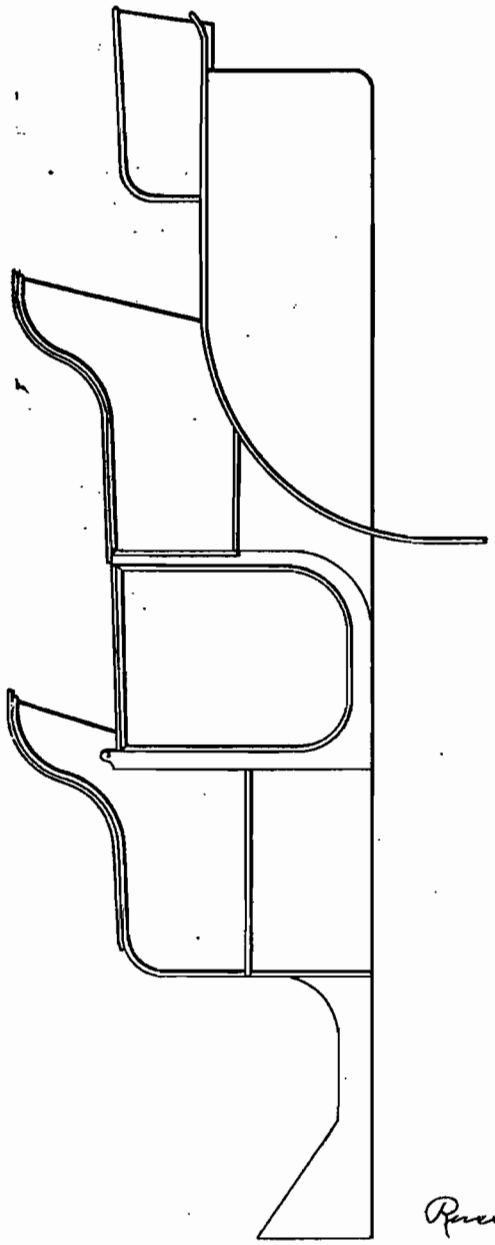

Witnesses
J. G. Sinkel
J. J. McCarthy

Inventor
Russell Huff
By
Foster, Freeman, Watson & Coit
Attorneys

THE NORRIS PETERS CO., WASHINGTON, D. C.

BEST AVAILABLE COPY

UNITED STATES PATENT OFFICE.

RUSSELL HUFF, OF DETROIT, MICHIGAN, ASSIGNOR TO PACKARD MOTOR CAR COMPANY, OF DETROIT, MICHIGAN, A CORPORATION OF WEST VIRGINIA.

DESIGN FOR A VEHICLE-BODY.

No. 39,488. **Specification for Design.** **Patented Sept. 1, 1908.**

Application filed May 29, 1908. Serial No. 435,841. Term of patent 7 years.

To all whom it may concern:

Be it known that I, RUSSELL HUFF, a citizen of the United States, residing at Detroit, in the county of Wayne and State of Michigan, have invented a new, original, and ornamental Design for a Vehicle-Body, of which the following is a specification, reference being had to the accompanying drawing, forming part thereof.

The figure is a side elevation of a vehicle body, showing my new design.

I claim:

The ornamental design for a vehicle body, as shown.

RUSSELL HUFF.

Witnesses:

CLARA I. DALE,

HOWARD HARKNESS.

DESIGN.

R. HUFF.

REAR AXLE CASING.

APPLICATION FILED JUNE 1, 1908.

39,629. Patented Oct. 20, 1908.

Fig. 1.

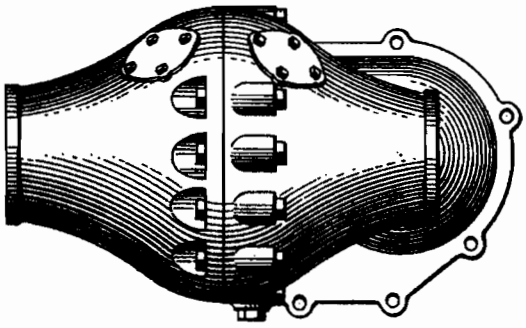

Fig. 2.

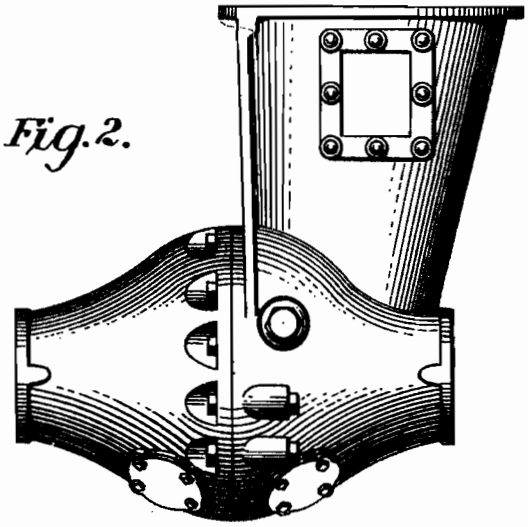

Witnesses
G. P. Kramer
J. J. McCarthy

Inventor
Russell Huff
By
Parker, Freeman, Watson & Carter,
Attorneys

THE NORRIS PETERS CO., WASHINGTON, D. C.

UNITED STATES PATENT OFFICE.

RUSSELL HUFF, OF DETROIT, MICHIGAN, ASSIGNOR TO PACKARD MOTOR CAR COMPANY, OF DETROIT, MICHIGAN, A CORPORATION OF WEST VIRGINIA.

DESIGN FOR A REAR-AXLE CASING.

No. 39,629. **Specification for Design.** **Patented Oct. 20, 1908.**

Application filed June 1, 1908. Serial No. 436,163. Term of patent 7 years.

To all whom it may concern:

Be it known that I, RUSSELL HUFF, a citizen of the United States, residing at Detroit, in the county of Wayne and State of Michigan, have invented a new, original, and ornamental Design for a Rear-Axle Casing, of which the following is a specification, reference being had to the accompanying drawing, forming part thereof.

Figure 1 is a view of my ornamental casing taken from the rear; and Fig. 2 is a plan view looking down on the casing.

The casing shown is intended to contain the differential gear on the rear axle of a motor vehicle, and it has been given the oval or egg-shaped form for the purpose of ornament. The appearance indicated in Fig. 1 is that which the casing has to the ordinary observer viewing it from the rear when it is in place on the rear axle of a motor vehicle.

I claim:

The ornamental design for a rear axle casing, as shown and described.

RUSSELL HUFF.

Witnesses:

HOWARD HARKNESS,

CLARA I. DALE.

DESIGN.

E. R. ESTEP.

LAMP.

APPLICATION FILED JULY 29, 1908.

39,564.

Patented Sept. 22, 1908.

Fig. 1.

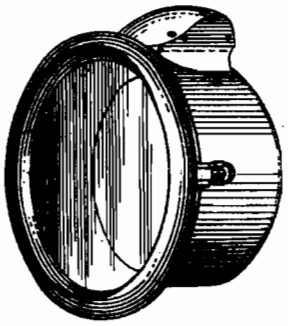

Fig. 2.

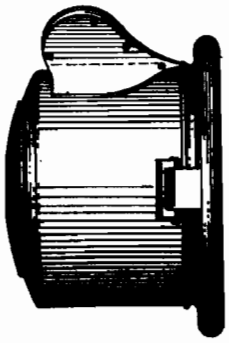

Witnesses

J. G. Stinkel

B. C. Rust

Edwin Ralph Estep Inventor

By

Foster, Freeman, Watson & Coit

Attorneys

THE NORRIS PETERS CO., WASHINGTON, D. C.

UNITED STATES PATENT OFFICE.

EDWIN RALPH ESTEP, OF DETROIT, MICHIGAN, ASSIGNOR TO PACKARD MOTOR CAR COMPANY, OF DETROIT, MICHIGAN, A CORPORATION OF WEST VIRGINIA.

DESIGN FOR A LAMP.

No. 39,564. **Specification for Design.** **Patented Sept. 22, 1908.**

Application filed July 29, 1908. Serial No. 446,022. Term of patent 7 years.

To all whom it may concern:

Be it known that I, EDWIN RALPH ESTEP, a citizen of the United States, residing at Detroit, in the county of Wayne and State of Michigan, have invented a new, original, and ornamental Design for Lamps, of which the following is a specification, reference being had to the accompanying drawing, forming part thereof.

The invention relates to lamps, and has particular reference to the ornamental appearance of those which are used upon motor vehicles.

In the accompanying drawing: Figure 1 is a perspective view of the lamp looking from a point slightly in advance of it; and Fig. 2 is a side view.

I claim:

The ornamental design for a lamp, as shown.

EDWIN RALPH ESTEP.

Witnesses:
W. H. WORKMAN,
C. FREEMAN.

A. LOOMIS.

BAGGAGE RACK FOR MOTOR VEHICLES.

APPLICATION FILED SEPT. 15, 1908.

1,115,698.

Patented Nov. 3, 1914.

2 SHEETS—SHEET 1.

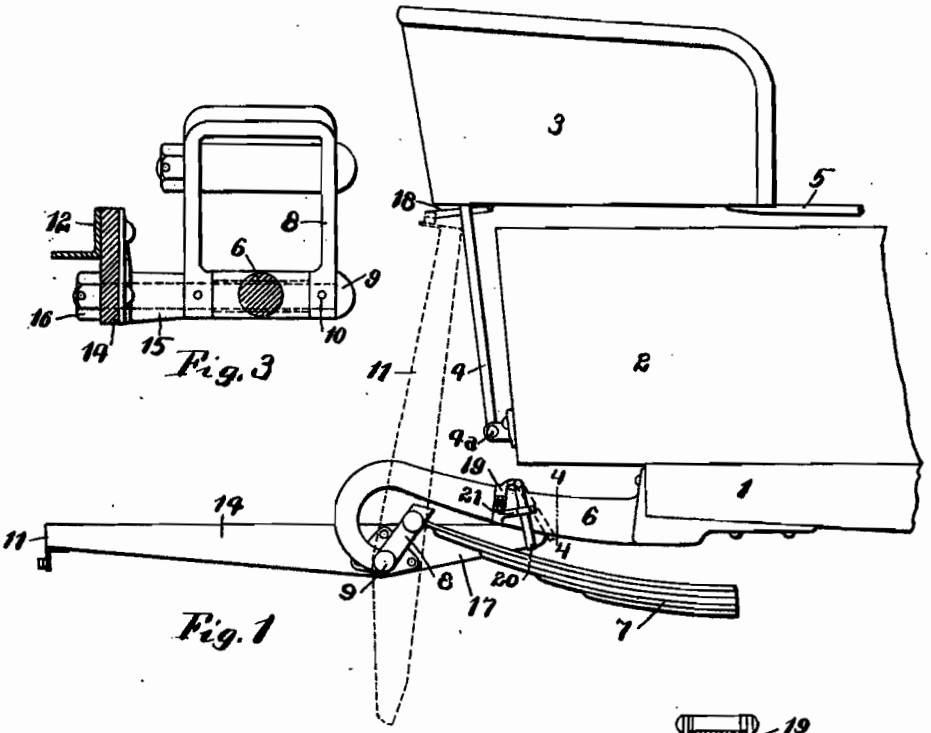

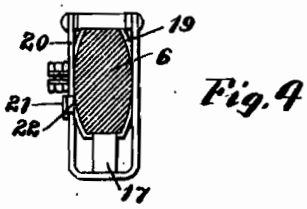

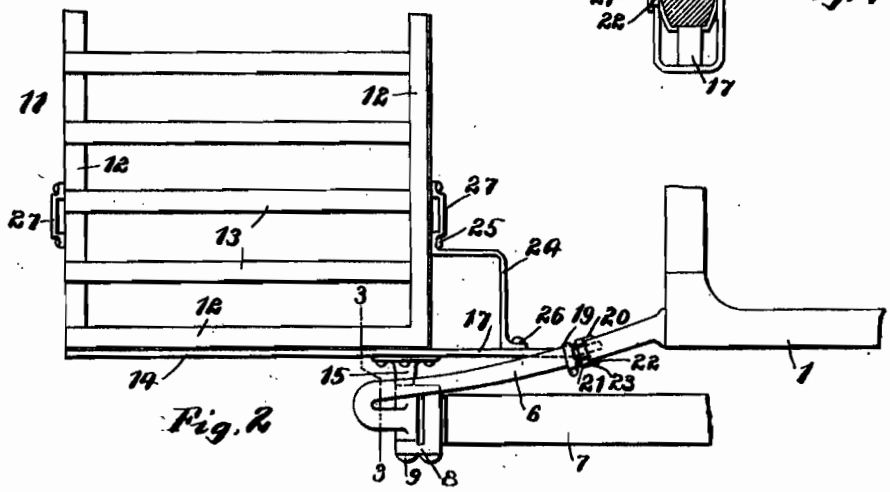

Witnesses
J. J. McCarthy
C. H. Taylor

Inventor
Allen Loomis
By Foster, Freeman, Watson & Coit
Attorneys.

A. LOOMIS.

BAGGAGE RACK FOR MOTOR VEHICLES.

APPLICATION FILED SEPT. 15, 1908.

1,115,698.

Patented Nov. 3, 1914.

2 SHEETS—SHEET 2.

Fig. 5.

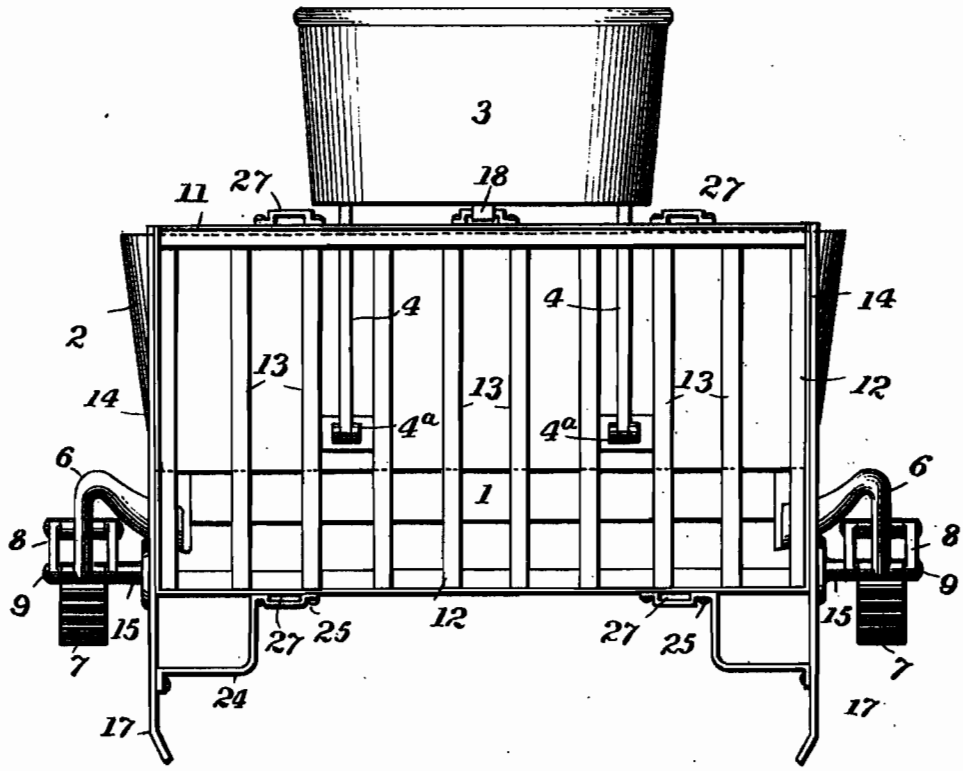

Witnesses

J. G. Tinkel

J. J. McCarthy

Inventor

Allen Loomis

By

Foster, Freeman, Watson & Coit

Attorneys

UNITED STATES PATENT OFFICE.

ALLEN LOOMIS, OF DETROIT, MICHIGAN, ASSIGNOR, BY MESNE ASSIGNMENTS, TO PACKARD MOTOR CAR COMPANY, OF DETROIT, MICHIGAN, A CORPORATION OF MICHIGAN.

BAGGAGE-RACK FOR MOTOR-VEHICLES.

1,115,698. Specification of Letters Patent. Patented Nov. 3, 1914.

Application filed September 15, 1908. Serial No. 453,13[illegible]

To all whom it may concern:

Be it known that I, ALLEN LOOMIS, a citizen of the United States, and residing at Detroit, in the county of Wayne and State of Michigan, have invented certain new and useful Improvements in Baggage-Racks for Motor-Vehicles, of which the following is a specification.

This invention relates to motor vehicles and particularly to baggage racks adapted to be attached to the rear portion of such vehicles.

This baggage rack is particularly designed for vehicles in which the rear hanger of the rear spring extends rearwardly from the vehicle frame and wherein the body or some of its attachments extend somewhat beyond and overhang the rear of the frame. Heretofore it has been customary to connect baggage racks with the rear cross bar of the frame, as in U. S. Patent No. 890,654, and in some instances the rack is adapted to be elevated and rest against the rear portion of the body or its attachments, as in said patent. A rack thus connected is impractical on the style of vehicle above referred to because of the overhanging of the body. Therefore, the present invention has been designed to fill the requirements, but it will be understood that it is not limited to use with a vehicle of the above described type, some of its novel features being adapted to use with other vehicle constructions. The objects and advantages of the invention will be apparent from the following description taken in connection with the drawings.

In the accompanying drawings: Figure 1 is a side elevation of the rear portion of a motor vehicle embodying the invention, the baggage rack being shown in full lines in lowered position and in dotted lines in raised position; Fig. 2 is a plan view of one end of the baggage rack and the contiguous parts of the vehicle, the rack being in lowered position; Fig. 3 is a section on the line 3—3 of Fig. 2; Fig. 4 is a section on the line 4—4 of Fig. 1; and Fig. 5 is a rear view showing the baggage rack elevated.

Referring to the drawings, 1 represents the rear portion of the vehicle frame; 2 the body supported thereon, and 3 what is termed a "tiger" seat having the two rear legs 4 pivotally mounted at 4^a on the rear end of the body and the forward leg 5 adapted to extend forwardly to a detachable connection (not shown) with the body, whereby the seat may be tilted back on the pivots 4 for more convenient access to the interior of the body 2. The detail construction of this seat does not form a part of the present invention and is not claimed herein.

Extending rearwardly from the corners of the frame 1 are the two spring hangers 6, one of which is shown in Figs. 1 and 2, and as these hangers and the parts connected therewith are the same on both sides of the vehicle, only one of them will be herein described.

The hanger 6 is suitably curved and is connected with the rear end of the spring 7 through the shackle 8 and bolt 9, said bolt passing through the shackle and the end of the spring hanger as shown particularly in Fig. 3, preferably being keyed to the shackle by pins 10 to provide a long bearing in the hanger.

The body of the baggage rack 11 herein shown is of ordinary construction, being composed of angle iron side and end pieces 12 and spaced straps 13, all of which are riveted together to form a rigid frame suitable for supporting a trunk or other baggage. To each end angle iron 12 is secured an end piece 14 preferably of heavier stock than the body of the rack, as these pieces are required to bear the entire load placed upon the rack. Each of these end pieces 14 extends beyond one side of the rack and between its ends it has riveted to it a hinge piece 15 through which passes the end of the bolt 9 which is elongated for this purpose, and which is provided with a nut 16 to hold the parts in place. The extended end 17 of the end piece 14 above referred to is adapted to engage the under side of the spring hanger 6 and thus hold the rack in correct horizontal position.

It will be understoood that the pivotal connection of the rack with the end of the spring hanger permits the rack to be raised to the position shown in dotted lines in Fig. 1 and it may then be secured in this position by a strap 18 attached to the bottom of the seat 3. Means also are provided for detachably securing the extension 17 to the spring hanger 6 to hold the rack in its lowered position, this means comprising the band 19 clamped around the hanger 6, the

stirrup 20 pivoted to said band and adapted to swing under the end of the extension 17 as will be seen by reference to Figs. 1 and 4, and the spring clip 21 which is shown as an integral arm on the band 19 and is formed with a beveled portion 22 and a notch 23 so that it will readily slip over and hold the stirrup 20 in the position shown in full lines in Fig. 1. It will be understood that when the stirrup 20 is released and moved to the position shown in dotted lines in Fig. 1, the extension 17 is thereby released and the rack may be turned on the bolt 9 to its raised position.

In a vehicle of the type described above in which there is a tiger seat at the rear, it is desirable that a convenient step be provided to gain access to the seat. In the present invention this step is formed as a part of the baggage rack and comprises an "L" shaped strip 24 having one end riveted to the side of the rack at 25 and the other end riveted to the extension 17 at 26. It will be seen that when the rack is in its raised position this step will hang just below the level of the bolt 9 and thus be available in ascending to the seat 3. In the drawings the strip 24 forming the step is shown as an integral part of one of the loops 27 to which straps are secured for holding the baggage on the rack, but it will be understood that the step may be formed in any other suitable way without departing from the spirit of the invention. Also in the form shown the strip 24 acts as a brace to strengthen the extension 17 thus performing a double function.

Having thus described the invention, what is claimed is:

1. In a motor vehicle, the combination with the frame and a baggage rack pivoted thereto, of a step mounted on said baggage rack and adapted to be brought into available position when said baggage rack is raised.

2. In a motor vehicle, the combination with the rear spring hanger, the spring shackle, and the bolt passing through the hanger and shackle, of a baggage rack pivoted on said bolt and having a part normally in engagement with said hanger between the ends of the latter.

3. In a motor vehicle, the combination with the spring hanger and a baggage rack pivoted thereto, the said rack being provided with an extension beyond said pivot, of means for separably holding said baggage rack in open position, comprising a band clamped on said hanger, a stirrup pivoted to said band and adapted to pass over the end of an extension on said baggage rack, and a spring clip on said band adapted to engage and hold said stirrup.

In testimony whereof I affix my signature in presence of two witnesses.

ALLEN LOOMIS.

Witnesses:
CLARA I. DALE,
HOWARD HARKNESS.

R. HUFF.

COMBINED TANK BRACKET AND STEP FOR MOTOR VEHICLES.

APPLICATION FILED OCT. 30, 1908.

1,023,848. Patented Apr. 23, 1912.

2 SHEETS—SHEET 1.

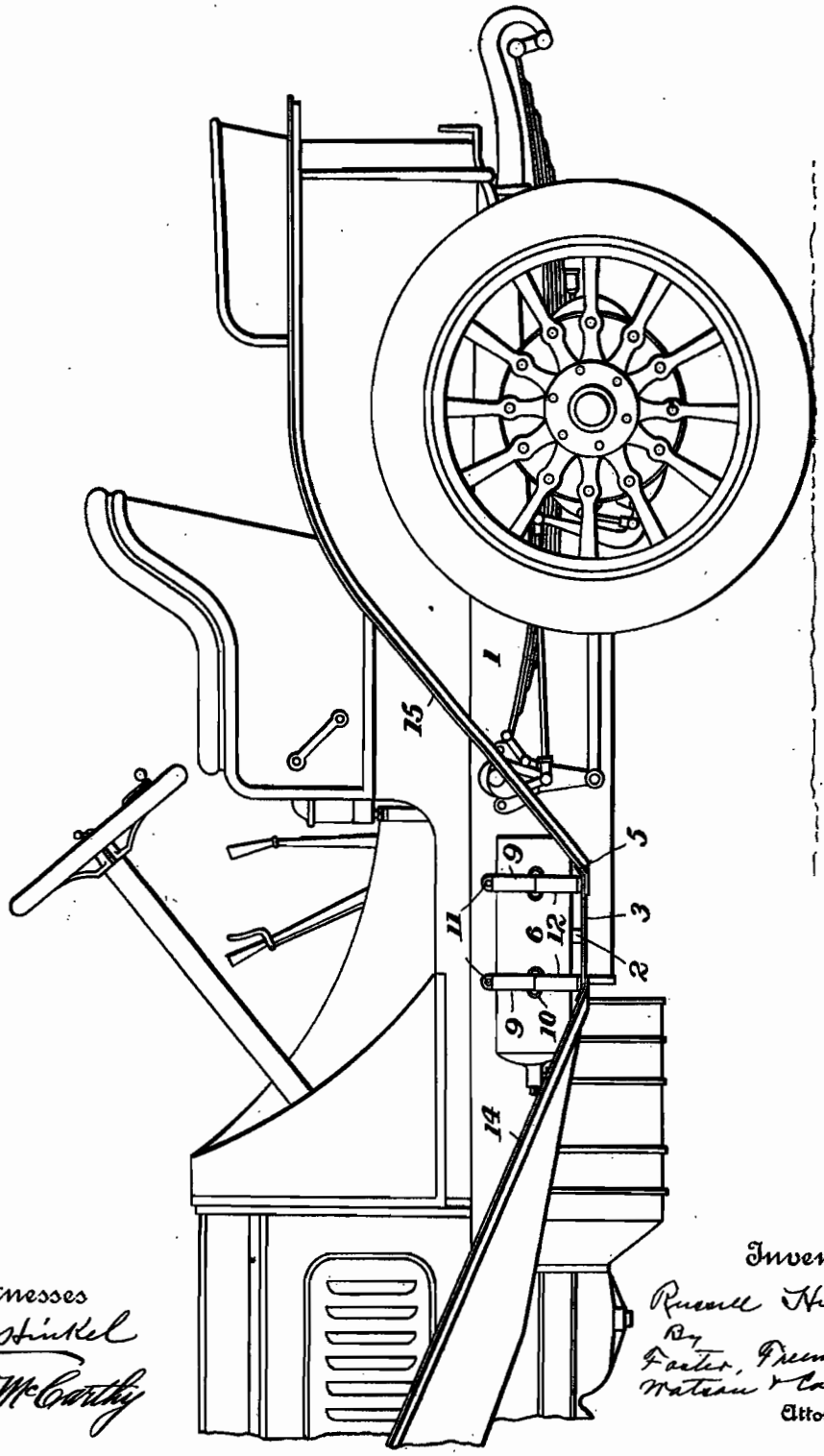

Fig. 1.

Witnesses
J. G. Stinkel
J. J. McCarthy

Inventor
Russell Huff
By
Foster, Freeman, Watson & Coit
Attorneys

COLUMBIA PLANOGRAPH CO., WASHINGTON, D. C.

R. HUFF.

COMBINED TANK BRACKET AND STEP FOR MOTOR VEHICLES.

APPLICATION FILED OCT. 30, 1908.

1,023,848. Patented Apr. 23, 1912.

2 SHEETS—SHEET 2.

Fig. 2.

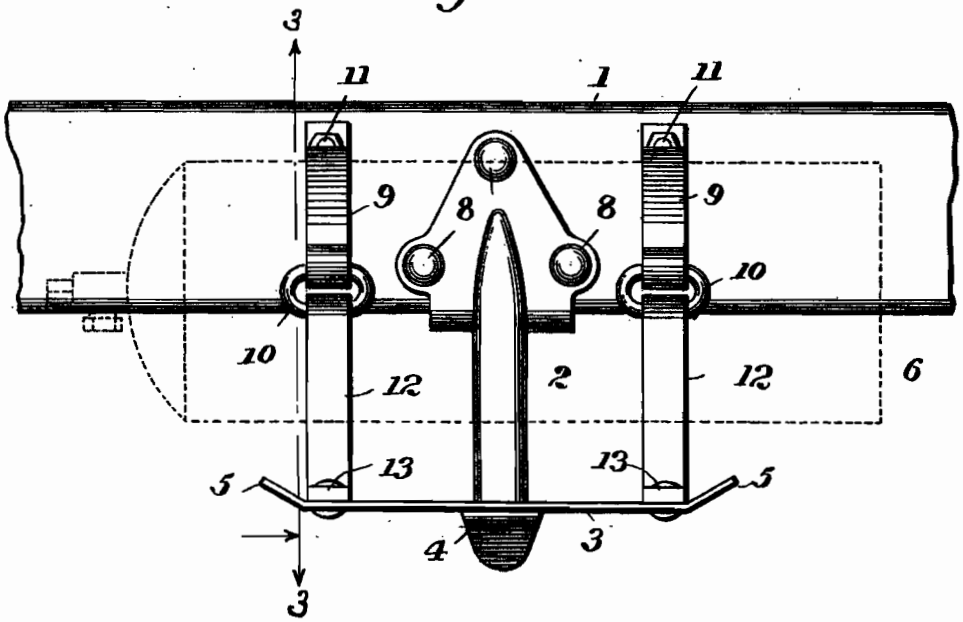

Fig. 3

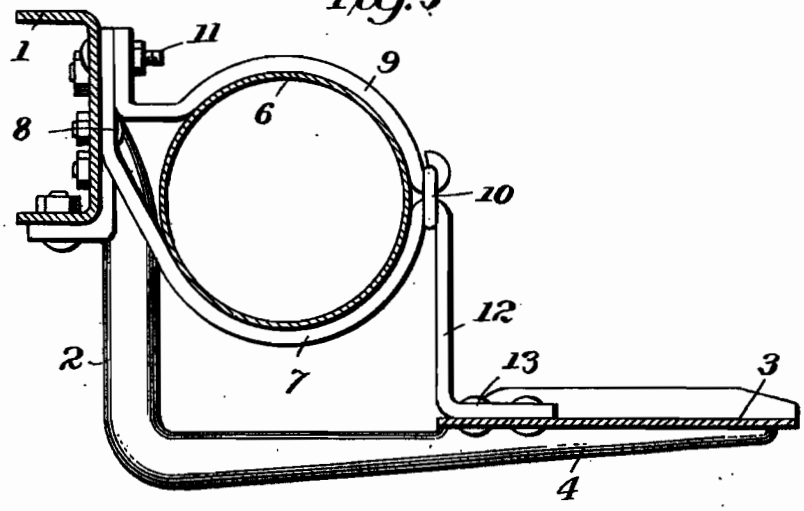

Witnesses

J. G. Strickel

J. J. McCarthy

Inventor

Russell Huff

By

Foster, Freeman, Watson & Coit

Attorneys

COLUMBIA PLANOGRAPH CO., WASHINGTON, D. C.

UNITED STATES PATENT OFFICE.

RUSSELL HUFF, OF DETROIT, MICHIGAN, ASSIGNOR, BY MESNE ASSIGNMENTS, TO PACKARD MOTOR CAR COMPANY, OF DETROIT, MICHIGAN, A CORPORATION OF MICHIGAN.

COMBINED TANK-BRACKET AND STEP FOR MOTOR-VEHICLES.

1,023,848. Specification of Letters Patent. Patented Apr. 23, 1912.

Application filed October 30, 1908. Serial No. 460,301.

To all whom it may concern:

Be it known that I, RUSSELL HUFF, a citizen of the United States, and resident of Detroit, in the county of Wayne and State of Michigan, have invented certain new and useful Improvements in Combined Tank-Brackets and Steps for Motor-Vehicles, of which the following is a specification.

This invention relates to motor vehicles and particularly to a bracket for supporting a pressure tank such as the Prest-o-lite tanks now on the market and for wholly or partially supporting a step. In the preferred form of the invention the step is provided with a main bracket and the pressure, tank brackets act as stay rods or auxiliary brackets for the step, making the latter more rigid and free from vibration. In the form of the bracket shown the tank itself is a part of the combination forming the stay rods for the step.

In the drawings: Figure 1 is a side view of the main parts of a motor vehicle showing my invention applied thereto; Fig. 2 is an enlarged side elevation of a part of one of the side bars of the motor vehicle frame showing my step and bracket secured thereto; and Fig. 3 is a section on the line 3—3 of Fig. 2.

In the drawings, 1 is the channel side bar of a motor vehicle frame; 2 is an L-shaped drop bracket suspended from said frame, and 3 is an approximately square sheet metal step suitably secured to the outwardly extending horizontal arm 4 of the bracket 2. The step 3 may be provided on its forward and rearward edges with diagonally extending flanges 5 to which the front and rear mud guards 14, 15, respectively, may be attached. In a step of this character the bracket 2 is ordinarily its sole support, and when this is true, the bracket must be made very heavy to withstand the twisting and bending strains to which it is subjected in practical use. My invention includes braces for the step which relieve the strains on the bracket and render the step steadier and stronger, and which at the same time serve to removably support a pressure tank as hereafter described.

In most motor vehicles of the present day some sort of pressure tank is carried, either for supplying gas to the headlights or for supplying air to the pneumatic tires, and the usual form of such tanks is cylindrical, about 6″x18″. The tank must be removably secured to some convenient part of the vehicle frame, and the present invention combines a bracket or supporting means for such a tank and a stay rod to steady or strengthen the step in a single element. The pressure tank 6 is shown in dotted lines in Fig. 2 and in full lines in section in Fig. 3. The combination tank brackets and stay rods are composed of two pairs of semi-cylindrical straps which surround the tank at convenient points, each pair comprising a lower strap 7 which is secured to the frame by a bolt 8 and an upper strap 9 hinged to the lower strap by a ring 10 and removably secured to the frame by a bolt 11, which latter bolt also passes through the end of the strap 7. Each of the lower straps 7 is provided with an arm 12 which is connected at its end with one of the ends of the step 3 as at 13. With this construction it will be observed that the supporting straps or brackets for the pressure tank not only firmly secure the tank to the frame, but also aid in supporting the step 3 and guarding it against vibration. While I have referred to the parts 7 and 9 as straps or rods, it will be understood that they have considerable rigidity and being secured firmly to the vehicle frame at one end really constitute supporting brackets.

It will be observed that the step 3 is offset considerably from the side of the frame 1 and that the tank 6 is arranged between the step and the frame whereby it takes no room on the step and does not obstruct the passage into and out of the vehicle. The tank so held is readily accessible, may be easily removed and replaced, and is in such position that its supply of gas or air may be conveniently turned on for use as desired. With this construction the bracket 2 may be made considerably lighter than in the ordinary construction, as the tank brackets aid greatly in supporting the step. It is particularly to be noted that the efficacy of the tank brackets in supporting the step is greatly enhanced by the presence of the tank itself within the brackets, as the straps 7 and 9 are braced by the inclosed tank, and with the extensions 12 form stay rods

or straps of considerable strength. In other words, the tank and straps coöperate to brace the step.

While I have shown my bracing straps used in connection with the L-shaped bracket which constitutes the main support for the step, it will be understood that the L-shaped bracket may be omitted without departing from my invention, and that the step may be supported altogether by the brackets which engage the tank.

Having thus described the invention, what is claimed is:

1. In a motor vehicle, the combination with the frame of a tank supporting bracket secured to the frame and having a seat for a pressure tank, means for securing a tank to said bracket, a step carried by the frame, and a connection between the tank bracket and the step for mutually bracing said bracket and step.

2. In a motor vehicle, the combination with the frame of two pressure tank supporting brackets having seats for a pressure tank, means for securing a tank to said brackets, a step supported from the frame by a connection arranged between said brackets, and connections between said brackets and the step for mutually bracing the brackets and step.

3. In a motor vehicle, the combination with the frame and a step arranged below the frame and offset therefrom, of a bracket connecting said frame and step, said bracket having a curved seat, a pressure tank resting on said seat, and a strap for securing said tank to said bracket.

4. In a motor vehicle, the combination with the frame, of a step carried by and extending outward from the frame, a bracket connecting the frame and step and having a curved seat, a pressure tank resting in said seat, and means for securely holding the tank upon its seat.

5. In a motor vehicle, the combination with the frame and the step, of a drop bracket hung from the frame and having an arm secured to the central portion of the step, a pair of brackets connecting the ends of the step with the frame, said brackets having curved seats formed therein, a pressure tank resting on said seats and straps for removably securing said tank to said pair of brackets.

In testimony whereof I affix my signature in presence of two witnesses.

RUSSELL HUFF.

Witnesses:
L. C. Tenney,
Howard Harkness.

Copies of this patent may be obtained for five cents each, by addressing the "Commissioner of Patents, Washington, D. C."

26° 269/139

A. LOOMIS.

SIDE CURTAIN SUPPORT FOR VEHICLES.

APPLICATION FILED NOV. 6, 1908.

1,045,861.

Patented Dec. 3, 1912.

2 SHEETS—SHEET 1.

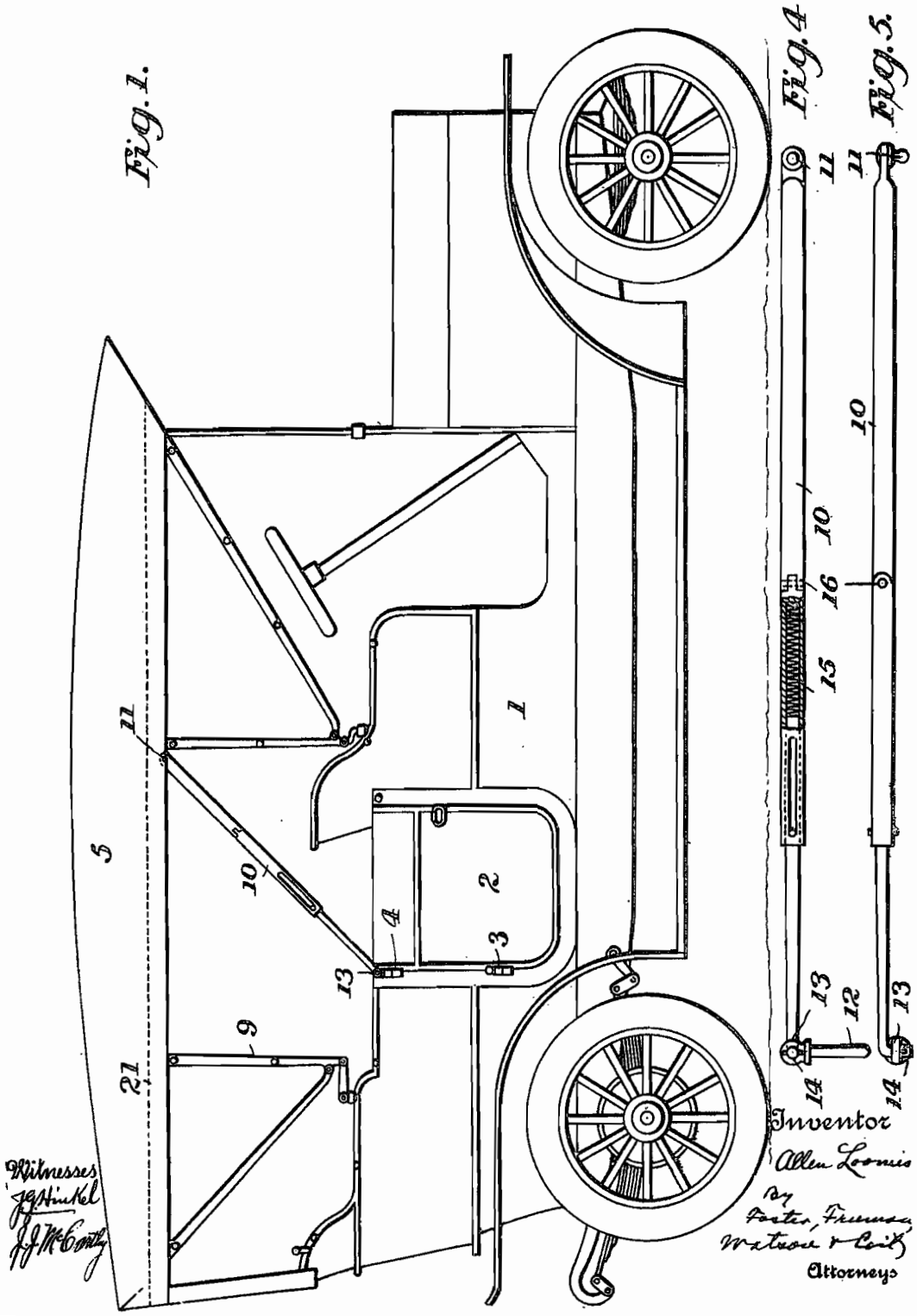

A. LOOMIS.

SIDE CURTAIN SUPPORT FOR VEHICLES.

APPLICATION FILED NOV. 6, 1908.

1,045,861.

Patented Dec. 3, 1912.

2 SHEETS—SHEET 2.

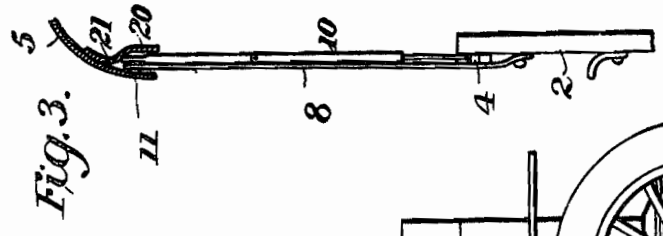

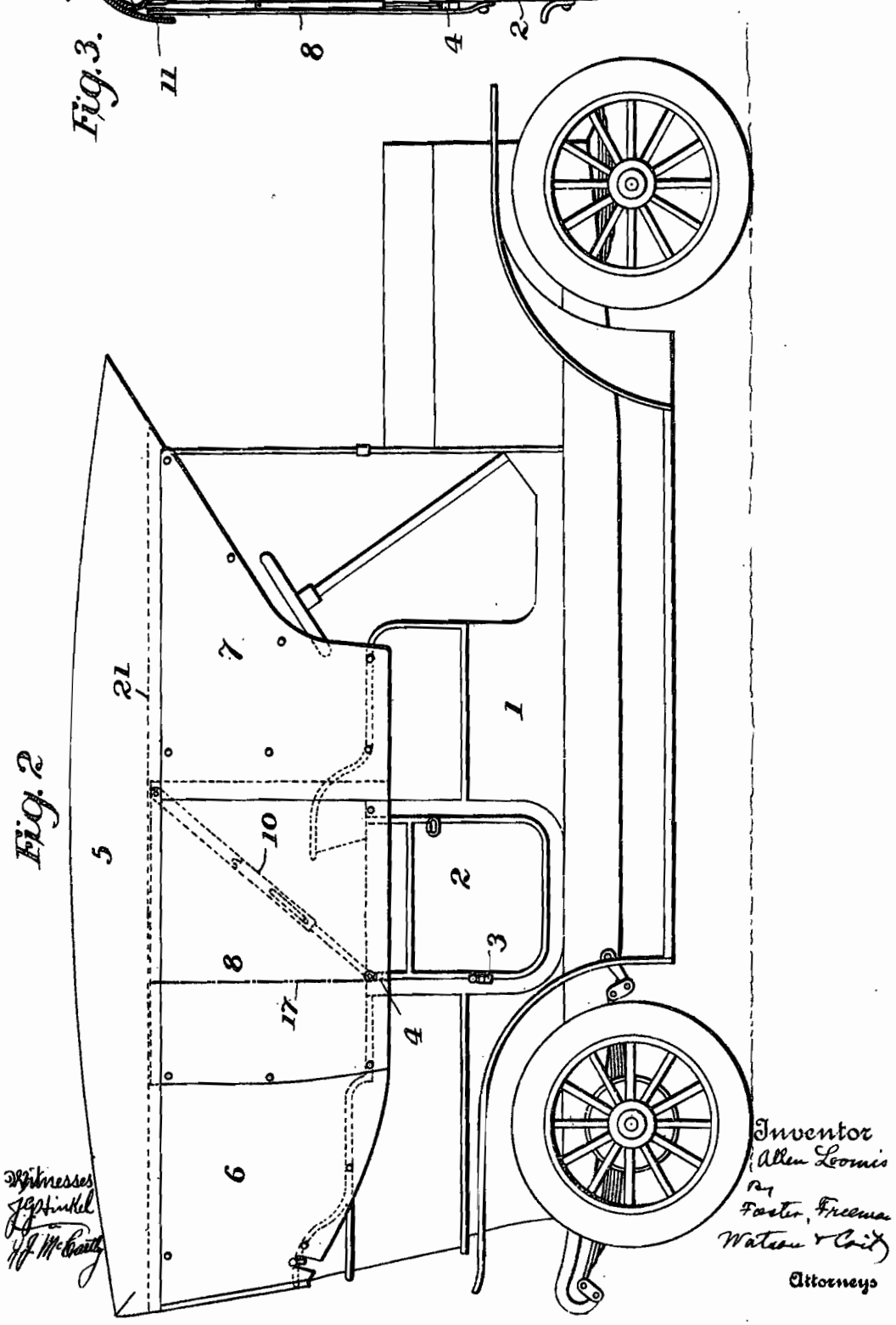

Witnesses
J. G. Hinkel
H. J. McCarthy

Inventor
Allen Loomis
By
Foster, Freeman
Watson & Coit
Attorneys

UNITED STATES PATENT OFFICE.

ALLEN LOOMIS, OF DETROIT, MICHIGAN, ASSIGNOR, BY MESNE ASSIGNMENTS, TO PACKARD MOTOR CAR COMPANY, OF DETROIT, MICHIGAN, A CORPORATION OF MICHIGAN.

SIDE-CURTAIN SUPPORT FOR VEHICLES.

1,045,861. Specification of Letters Patent. Patented Dec. 3, 1912.

Application filed November 6, 1908. Serial No. 461,376.

To all whom it may concern:

Be it known that I, ALLEN LOOMIS, a citizen of the United States, and resident of Detroit, in the county of Wayne and State of Michigan, have invented certain new and useful Improvements in Side-Curtain Supports for Vehicles, of which the following is a specification.

This invention relates to side curtain supports for vehicles and has particular reference to the section of the side curtain which is immediately above and secured to the door in the body of the vehicle.

Its objects are to provide a simple, convenient and easily applied means for so supporting the door section of the curtain that it will move with the door when opened and will make proper connection with the canopy and adjacent curtain when the door is closed.

It embodies a supporting rod simple in construction, which may be applied to any ordinary vehicle with very slight modification of the vehicle itself, and which may be easily and quickly detached without leaving anything to mar or affect the appearance of the vehicle.

Its novel features and advantages will be apparent from the following description taken in connection with the drawings.

In the drawings: Figure 1 is a side view of a motor vehicle having my support applied thereto and having the side curtains removed; Fig. 2 is a similar view showing the side curtains in place and showing my support in dotted lines; Fig. 3 is a vertical section through a portion of the door, the edge of the canopy and the intermediate side curtain sections; Fig. 4 is a detail side view of my support; and Fig. 5 is a detail plan view of the support.

In the drawings I have shown my invention applied to a well known form of motor vehicle. The body 1 of the vehicle is provided with the side door 2, supported by the hinges 3, 4, and above the body the usual canopy 5 is mounted upon the usual bows. Side curtains 6, 7 and 8 fill the space between the canopy and the body, and the sections 6 and 7 are secured in place in the usual way. Section 8 which is the door section is secured at its rear edge to the upright bow 9 and at its bottom is secured to the top of the door 2. Its forward edge and the forward part of its upper edge are not secured to the adjacent curtain or parts of the vehicle, but are left free so that this curtain section may move with the door when it is opened.

The features of construction thus far described are broadly old and my invention relates to the means for supporting the curtain 8 in proper position and so that it will move with the door and remain upright while moving. In order to support the door section of the curtain I use a rod 10, which is arranged diagonally above the door and is secured at its upper end to the upper free corner of the curtain section by the usual button 11. This rod is pivotally supported at its lower end at the hinged end of the door, and I preferably support it directly from the hinge itself. The hinge bolt 12 of the upper hinge 4 is made with an eye or loop 13 in its upper end and the lower end of the rod 10 is made with a bend 14 which is adapted to enter this loop and this end is detachably secured within the loop in any suitable way. The rod 10 is preferably made of two telescoping sections having therein the spring 15 which makes the rod longitudinally compressible, and for convenience of storing the rod is preferably provided with a hinge 16.

It will be observed that when the rod is secured as above indicated it will hold the curtain 8 distended, and since this curtain is secured to the door at its bottom, it, together with the supporting rod, will move with the door when it is opened, the rod turning on the hinge bolt 12 as a pivot and the curtain bending upon the dotted line 17. It will be observed that this supporting rod may be quickly and easily applied to the curtain and to the vehicle, and may be as quickly removed and stored, and it will be further observed that it is applicable to any ordinary vehicle by the very slight change incident to adding the loop 13 to the upper hinge bolt.

In order that the movable door section and the side curtain may make proper connection with the adjacent side curtain and also with the canopy I make the door section of such length and height as to overlap the edges of the adjacent section and canopy. When the door is closed these overlapping edges are to be tucked under the adjacent edges of the curtain and canopy so as to make a complete water-tight screen. As clearly shown in Fig. 3, I secure along the

inner lower edge of the canopy a flap 20 by stitches 21, thus leaving a pocket between the edge of the canopy and the flap into which the upper edge of the door section is tucked. The compressibility of the supporting rod 10 permits the edges of the door section to be brought under the adjacent flaps and to be properly tucked in place, and since the rod will expand longitudinally under the influence of the spring when the curtain is in place it will properly hold the door section tucked in beneath the adjacent sections.

Having thus described the invention, what is claimed is:—

1. In a vehicle, the combination with a vehicle body, of a hinged door for said body, a curtain section above said door terminating approximately at the front end of said door, and an upwardly extending rod pivotally secured at the hinge end of said door and supporting the upper forward edge of said curtain section.

2. In a vehicle, the combination with a vehicle body, of a hinged door for said body, a curtain section above said door terminating approximately at the front end of said door, a diagonally arranged longitudinally compressible rod secured at its lower end at the hinge end of said door and at its upper end to the forward upper corner of the curtain section, and resilient means tending to extend said rod longitudinally.

3. In a vehicle, the combination with a vehicle body, of a hinged door for said body, a curtain section above said door terminating approximately at the front end of said door, and a diagonally arranged rod pivotally secured at its lower end to the hinge of said door and at its upper end to the forward upper corner of the curtain section.

4. In a vehicle, the combination with a vehicle body, of a door therein, hinges for said door, the upper hinge being provided with a hinge bolt having an eye or loop on its upper end, a curtain section above said door terminating approximately at the front end of said door, and a diagonally arranged rod secured at its lower end in the loop of said hinge bolt and secured at its upper end to the upper edge of said curtain section.

5. In a vehicle, the combination with a vehicle body, of a door therein, hinges for said door, the upper hinge being provided with a hinge bolt having an eye or loop on its upper end, and a rod having its lower end so bent as to fit in said loop and having at its upper end means for securing it to a curtain.

6. In a vehicle, the combination with a vehicle body, of a door therein, hinges for said door, the upper hinge being provided with a hinge bolt having an eye or loop on its upper end, and a longitudinally compressible rod having its lower end so bent as to fit in said loop and having at its upper end means for securing it to a curtain.

7. In a vehicle, the combination with a vehicle body, of a hinged door for said body, a canopy above said body, side curtains between said canopy and body including a door section secured at its bottom to said door and at its rear edge to said vehicle, and a diagonally arranged rod pivotally supported at its lower end on the body of the vehicle and secured at its upper end to the upper free corner of the door section of the side curtains.

8. In a vehicle, the combination with a vehicle body, of a hinged door for said body, a canopy above said body, side curtains between said canopy and body including a door section secured at its bottom to said door and at its rear edge to said vehicle, a diagonally arranged longitudinally compressible rod pivotally supported at its lower end and secured at its upper end to the upper free corner of the door section of the side curtains, and resilient means tending to extend said rod longitudinally.

9. In a vehicle, the combination with a vehicle body, of a door for said body, a canopy above said body, side curtains between said canopy and body including a door section, the said door section being secured to the door at its bottom and being sufficiently wide and high to overlap the edges of the canopy and adjacent side curtain and having a margin adapted to be tucked in beneath the edges of the canopy and side curtain, a diagonally arranged longitudinally compressible rod secured to and supporting the upper free corner of said door section, and resilient means tending to extend said rod longitudinally.

10. In a vehicle, the combination with a vehicle body, of a door for said body, a canopy above said body, side curtains between said canopy and body including a door section, the said door section being secured to the door at its bottom and overlapping the lower edge of the canopy whereby it may be tucked in beneath said lower edge, a longitudinally compressible rod secured to the upper edge of said door section to support the same, and resilient means tending to extend said rod longitudinally.

11. In a vehicle, the combination with a vehicle body, of a door for said body, a canopy above said body, side curtains between said canopy and body including a door section, the said door section being secured to the door at its bottom, and overlapping the edge of the adjacent side curtain, whereby it may be tucked beneath the same, and a longitudinally compressible rod secured to the edge of the door section and having spring means for yieldingly main-

taining said door section in extended position.

12. In a vehicle, the combination with a vehicle body, of a door for said body, a canopy above said body, side curtains between said canopy and body including a door section, the edge of said canopy above said door section having a flap secured thereto and the door section overlapping the edge of the canopy whereby it may be tucked in between said flap and the edge of the canopy, a telescopic rod for holding said door section in extended position, and a spring adapted to extend the sections of said rod.

13. In a vehicle, the combination with a vehicle body, of a door therein, a canopy above said body, side curtains including a door section, and a longitudinally compressible support secured to said section at the edge and having spring means for holding said door section extended.

14. In a vehicle, the combination with the vehicle body provided with a door, of a canopy above said body, side curtains including a door section, and a folding rod pivotally secured to the body of the vehicle and adapted to support the forward upper corner of the door section.

15. In a vehicle, the combination with the vehicle body having a door therein, of a canopy above said body, side curtains including a door section, and a folding rod adapted to support said door section and having a portion thereof longitudinally extensible and provided with spring means adapted to normally hold the rod extended.

In testimony whereof I affix my signature in presence of two witnesses.

ALLEN LOOMIS.

Witnesses:
HOWARD HARKNESS,
L. C. TENNEY.

R. HUFF.

CONTROLLING MECHANISM FOR MOTOR VEHICLES.

APPLICATION FILED NOV. 20, 1908.

1,029,685. Patented June 18, 1912.

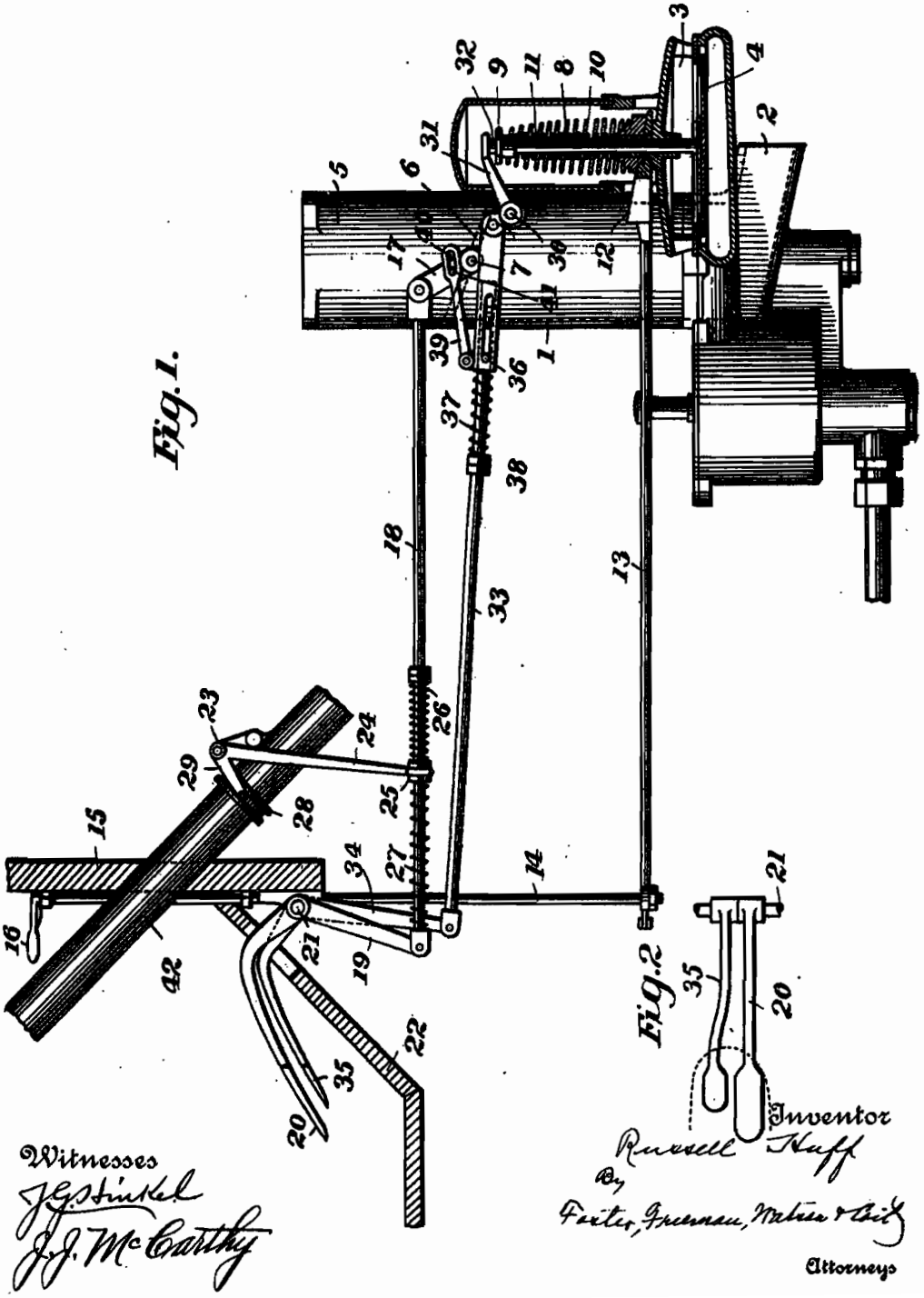

UNITED STATES PATENT OFFICE.

RUSSELL HUFF, OF DETROIT, MICHIGAN, ASSIGNOR, BY MESNE ASSIGNMENTS, TO PACKARD MOTOR CAR COMPANY, OF DETROIT, MICHIGAN, A CORPORATION OF MICHIGAN.

CONTROLLING MECHANISM FOR MOTOR-VEHICLES.

1,029,685. Specification of Letters Patent. Patented June 18, 1912.

Application filed November 20, 1908. Serial No. 463,666.

To all whom it may concern:

Be it known that I, RUSSELL HUFF, a citizen of the United States, and residing at Detroit, in the county of Wayne and State of Michigan, have invented certain new and useful Improvements in Controlling Mechanism for Motor-Vehicles, of which the following is a specification.

This invention relates to motor vehicles operated by internal combustion engines, and has particular reference to the means for controlling the operation of the carbureter which supplies the engine with the combustible mixture.

I have devised means for positively opening the ordinary suction air inlet valve of the carbureter and have so combined this means with the means for controlling the engine that the air valve will be positively opened when the engine is running at high speed, thus furnishing a free supply of air to combine with the gasolene to form in sufficient quantities the combustible mixture at the time when it is most needed. Ordinarily the carbureter of motor vehicles is provided with a main air inlet which is open and an auxiliary air inlet. The auxiliary inlet is provided with an inwardly opening valve normally held closed by a spring which is so weak as to permit the valve to be opened by suction within the apparatus. When the engine is running at high speed the auxiliary inlet should be held open, but I have found that the suction does not maintain it opened against the tension of the spring, and for this reason I have devised my positive means for opening it.

In the accompanying drawing Figure 1 shows a side view of my controlling means and so much of the carbureter and motor vehicle as will enable one skilled in the art to understand the invention, certain parts being shown in section; and Fig. 2 is a plan view of the pedals.

My invention is applied to an ordinary carbureter 1, which is provided with the main air inlet 2, which is normally open, and with the auxiliary air inlet 3, which is normally closed by the inwardly opening valve 4. It will be understood that the air entering through the inlets 2 and 3 is carbureted by being mixed with gasolene which is supplied in the ordinary way, and that this mixture passes up the intake pipe 5 to the engine cylinder. In the pipe 5 there is a butterfly throttle valve 6 pivoted upon a shaft 7, which valve controls the quantity but not the quality of the mixture which passes to the engine cylinder. The valve 4 is provided with a stem 8 carrying at its upper end an adjustable nut 9 against the undersurface of which bears the weak spring 10 which serves to hold the valve 4 normally closed. A heavy or strong spring 11 also surrounds the valve stem 8 and serves as a buffer to limit the amount to which the valve is opened. The strength of the spring 10 is such that the suction within the carbureter will draw the valve 4 away from its seat against the tension of the spring, thus opening the auxiliary passage 3 for the air so that it may enter the carbureter and be combined with the gasolene. The nut 9 permits the tension of the spring 10 to be adjusted so as to control the amount to which the valve 4 will open under the influence of suction, and an additional means for adjusting this tension consists of a wedge 12 carried upon the end of the longitudinally movable rod 13 which is suitably connected to the vertical rotary rod 14 extending upon the inside of the vehicle dash 15 and provided at its upper end with a suitable handle 16 for operating it. This last mentioned means permits the driver of the vehicle to regulate the tension of the spring without stopping the vehicle or leaving his seat.

The auxiliary air valve above described and also the construction of the bottom of the carbureter are fully described in my prior application Serial No. 390,652, and are not herein claimed.

The throttle valve 6 is operated by an arm 17 secured to the shaft 7 and pivotally connected to the rod 18 which in turn is pivotally connected to the arm 19 of the bell crank lever 20 pivoted on the shaft 21. The upper arm of the bell crank lever 20 is in the form of a pedal extending through the floor 22 of the motor vehicle and in a position to be conveniently operated by the driver. Other means for operating the throttle valve consists of a bell crank lever 23 having an arm 24 engaging a sleeve 25 on the rod 18 between the springs 26, 27. This bell crank lever is turned upon its pivot by a sleeve 28 making engagement with the arm 29, the said sleeve being mounted on the steering post 42 of the motor vehicle and being moved longitudinally thereof by a hand le-

ver (not shown) on the steering wheel, and connections from said hand lever within the steering post to the sleeve 28.

The means for operating the throttle valve so far described are not claimed herein.

The novel features of the present invention relate to means for positively opening the valve 4. A bell crank lever pivoted at 30 has an arm 31 bearing upon the top 32 of the valve stem 8 so that a depression of this arm will depress the valve 4 and consequently open it. This bell crank lever is operated by the rod 33 which is connected to it at one end, and which is connected at its other end to the arm 34 of the bell crank lever 35 pivotally supported at 21 immediately beside the bell crank lever 20. It will be observed that the pedal arm of the lever 35 is at a lower level than that of the lever 20 and that being immediately adjacent the lever 20, the foot of the driver, in pressing down the lever 20, thus opening the throttle valve, will, after that valve has been opened a certain amount, strike the end of the lever 35, thus carrying that lever down with the throttle control lever. This positively opens and holds open the valve 4 when the throttle valve 6 is wide open, which usually occurs when the engine is running at high speed. In order to prevent breaking the parts of the mechanism I preferably make the rod 33 in two telescoping sections provided with the pin stop 36 and with the surrounding spring 37 held by the adjusting nut 38, and thus any undue strains are taken up by the spring 37, which permits the rod to be longitudinally compressed.

While I prefer to operate my means for positively opening the auxiliary valve by a separate pedal lever it will be understood that other means may be employed.

The relative arrangement of the two pedal levers above described brings about the proper timing of the operation of my controlling means, but in the drawings I have shown an additional means which may be used separately or in connection with that above described for securing not only the positive opening of the auxiliary air valve but also the proper timing. This additional means consists of a link arm 39 pivotally connected at one end to the rod 33 and at the other end having a slot 40 engaging a pin 41 on the arm 17, which controls the throttle valve 6. It will be understood that when the arm 17 has moved a certain distance and the valve 6 has been opened a certain amount, the pin 41 will engage the end of the slot, thus moving the rod 33 and depressing the arm 31 bearing on top of the valve stem 8.

I prefer to use the two separate controlling levers 20 and 35 for controlling the throttle and air inlet valve, since the use of these levers not positively connected enables me to operate the throttle and the air valve independently if desired, but at the same time their relationship enables me to operate them together, if occasion demands, as above indicated.

Having thus described the invention, what is claimed is:

1. In a motor vehicle including an internal combustion engine, the combination with a carbureter provided with an air inlet, of a valve for said inlet, yielding means tending normally to close said valve, an operating arm adjacent the driver's seat on said vehicle, and means including a spring connection from said arm for positively opening and holding open said valve.

2. In a motor vehicle including an internal combustion engine, the combination with a carbureter provided with an air inlet, of an inwardly opening valve for said inlet, a weak spring tending to close said valve, a stronger spring in position to serve as a stop to limit the opening of the valve, an operating arm adjacent the driver's seat on said vehicle, and means including a spring connection from said arm for positively opening and holding open said valve.

3. In a motor vehicle including an internal combustion engine, the combination with a carbureter, of an air inlet valve therefor, a throttle valve for controlling the supply of combustible mixture from said carbureter to the engine, and means for positively opening said air inlet valve adapted to be brought into operation when a predetermined amount of combustible mixture is being supplied to the engine, and means whereby said throttle valve may be independently operated.

4. In a motor vehicle, including an internal combustion engine, the combination with a carbureter, of a normally closed air inlet valve therefor, a throttle valve for regulating the supply of combustible mixture from said carbureter to the engine cylinder, means for controlling said throttle valve, and means for positively opening said air inlet valve adapted to be automatically brought into operation when the throttle valve has opened a predetermined amount.

5. In a motor vehicle including an internal combustion engine, the combination with a carbureter, of an air inlet valve therefor adapted to be automatically opened by the engine suction, a throttle valve for regulating the supply of combustible mixture from said carbureter to the engine cylinder, a lever adjacent the driver's seat of the vehicle for controlling said throttle valve, and a lever adjacent said first mentioned lever for positively opening said air inlet valve.

6. In a motor vehicle including an internal combustion engine, the combination with a carbureter, of an air inlet valve therefor,

a throttle valve for regulating the supply of combustible mixture from said carbureter to the engine cylinder, a foot lever adjacent the driver's seat of the vehicle for controlling said throttle valve, and a lever adjacent said first mentioned lever but at a lower level for positively opening said air inlet valve and adapted to be brought into operation when the throttle lever has been partially depressed.

7. In a motor vehicle, including an internal combustion engine, the combination with a carbureter, of means for controlling the supply of combustible mixture from said carbureter to the engine, means for controlling the quality of the mixture including a spring seated air valve and means for positively opening said air valve, said means being so associated with the means for controlling the supply as to be brought into operation when the mixture is being supplied in a predetermined amount.

8. In a motor vehicle, the combination with a plurality of motor controlling devices, of a plurality of operating levers connected respectively to said devices, said levers having pedal portions substantially side by side transversely of the vehicle and adapted to be engaged simultaneously by one foot of the operator.

9. In a motor vehicle, the combination with motor controlling devices, of a lever having a pedal portion and connected to one of said devices, and another lever having a pedal portion and independently connected to another of said devices, said pedal portions being arranged substantially side by side transversely of the vehicle whereby both may be simultaneously operated by the foot of the driver.

10. In a motor vehicle, the combination with motor controlling devices, of a lever connected to one of said devices, and a second lever independently connected to another of said devices and arranged adjacent the first lever and at a slightly lower level than said first lever, said levers having pedal portions extending in the same direction from their fulcrums, whereby the foot of the driver may depress the first lever slightly before engaging the second lever and may thereafter depress both levers simultaneously.

11. In a motor vehicle, the combination with the motor having an intake pipe with a throttle valve therein and having other controlling devices, of a lever having a pedal portion and connected to operate said throttle valve, and another lever having a pedal portion and connected to one of said other controlling devices, said pedals being arranged substantially side by side transversely of the vehicle, whereby both levers may be simultaneously depressed by the foot of the driver.

12. In a motor vehicle including an internal combustion engine, the combination with a carbureter, of a throttle valve for controlling the supply of combustible mixture from said carbureter to the engine, an auxiliary inlet valve for said carbureter, and a plurality of levers having pedal portions and connected respectively to said throttle and auxiliary inlet valves, said pedal portions being arranged substantially side by side transversely of the vehicle and adapted to be engaged simultaneously by the foot of the operator.

13. In a motor vehicle including an internal combustion engine, the combination with a carbureter, of a throttle valve for controlling the supply of combustible mixture from said carbureter to the engine, an auxiliary air inlet valve for said carbureter, and a plurality of levers having pedal portions and connected respectively with said throttle and auxiliary air inlet valves, said pedal portions being arranged substantially side by side transversely of the vehicle and adapted to be engaged simultaneously by one foot of the operator, the pedal controlling the air inlet valve being at a slightly lower level than the pedal controlling the throttle valve.

In testimony whereof I affix my signature in presence of two witnesses.

RUSSELL HUFF.

Witnesses:
C. I. DALE,
HOWARD HARKNESS.

DESIGN.

E. R. ESTEP.

PANEL FOR LAMP SHADES OR CASINGS.

APPLICATION FILED NOV. 21, 1908.

43,694. Patented Mar. 11, 1913.

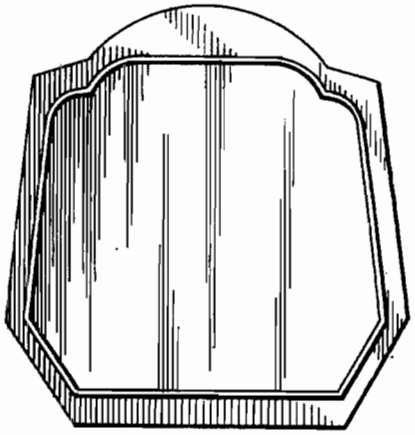

Witnesses

J. G. Hinkel

J. J. McCarthy

Inventor

Edwin R. Estep

By

Foster, Freeman, Watson & Coit

Attorneys

COLUMBIA PLANOGRAPH CO., WASHINGTON, D. C.

UNITED STATES PATENT OFFICE.

EDWIN R. ESTEP, OF DETROIT, MICHIGAN, ASSIGNOR, BY MESNE ASSIGNMENTS, TO PACKARD MOTOR CAR COMPANY, OF DETROIT, MICHIGAN, A CORPORATION OF MICHIGAN.

DESIGN FOR A PANEL FOR LAMP SHADES OR CASINGS.

43,694. Specification for Design. Patented Mar. 11, 1913.

Application filed November 21, 1908. Serial No. 463,926. Term of patent 7 years.

To all whom it may concern:

Be it known that I, EDWIN R. ESTEP, a citizen of the United States, residing at Detroit, in the county of Wayne and State of Michigan, have invented a new, original, and ornamental Design for a Panel for Lamp Shades or Casings, of which the following is a specification, reference being had to the accompanying drawing, forming part thereof.

The figure is a plan view of a panel for a lamp shade or casing showing my new design.

My design embodies an outer marginal frame of suitable material having the peculiar and ornamental shape shown and adapted to contain a central piece of glass to constitute the window of the lamp. It will be understood that the panel is to be placed over the opening in a lamp casing and is to be secured in place.

I claim:

The ornamental design for a panel for lamp shades or casings as shown and described.

EDWIN R. ESTEP.

Witnesses:
W. H. WORKMAN,
S. FREEMAN.

Copies of this patent may be obtained for five cents each, by addressing the "Commissioner of Patents, Washington, D. C."

DESIGN.

E. R. ESTEP.

TYPE ORNAMENT.

APPLICATION FILED NOV. 30, 1908.

39,817.

Patented Feb. 9, 1909.

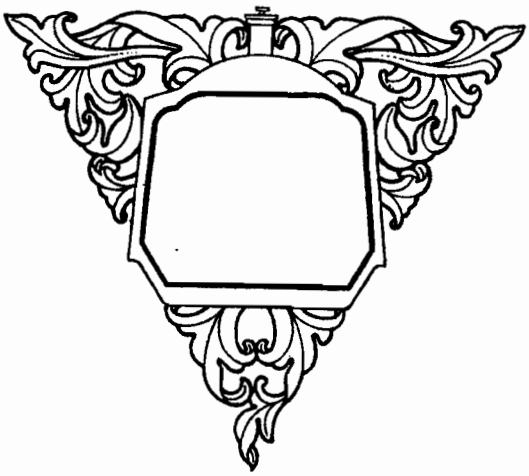

Witnesses

J. G. Stinkel

J. J. McCarthy

Inventor

Edwin R. Estep

by Foster Freeman Watson & Coit

Attorneys

THE NORRIS PETERS CO., WASHINGTON, D. C.

UNITED STATES PATENT OFFICE.

EDWIN R. ESTEP, OF DETROIT, MICHIGAN, ASSIGNOR TO PACKARD MOTOR CAR COMPANY, OF DETROIT, MICHIGAN, A CORPORATION OF WEST VIRGINIA.

DESIGN FOR A TYPE ORNAMENT.

No. 39,817. **Specification for Design.** **Patented Feb. 9, 1909.**

Application filed November 30, 1908. Serial No. 465,451. Term of patent 7 years.

To all whom it may concern:

Be it known that I, EDWIN R. ESTEP, a citizen of the United States, residing at Detroit, in the county of Wayne and State of Michigan, have invented a new, original, and ornamental Design for a Type Ornament, of which the following is a specification, reference being had to the accompanying drawing, forming part thereof.

The figure is a face view of a type ornament showing my new design.

My design embodies a substantially triangular figure having the body composed of foliated forms and a central panel having the form of a front view of a motor vehicle radiator.

I claim:

The ornamental design for a type ornament as shown and described.

EDWIN R. ESTEP.

Witnesses:

W. H. WORKMAN,

DAVID C. MCKAY.

180168.4

V. LINK.

MOTOR VEHICLE.

APPLICATION FILED DEC. 7, 1908.

1,083,330.

Patented Jan. 6, 1914.

2 SHEETS—SHEET 1.

Fig. 1.

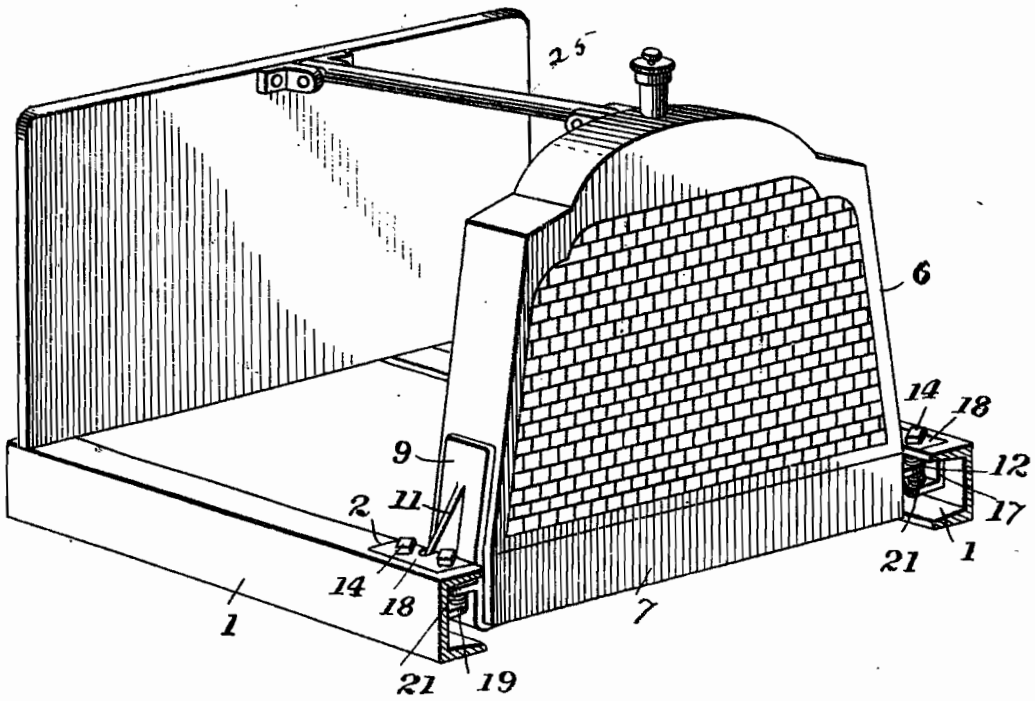

Witnesses

J. G. Stinchel

J. J. McCarthy

Inventor

Vincent Link

By

Foster, Freeman, Watson & Coit

Attorneys

V. LINK.

MOTOR VEHICLE.

APPLICATION FILED DEC. 7, 1906.

1,083,330.

Patented Jan. 6, 1914.

2 SHEETS—SHEET 2.

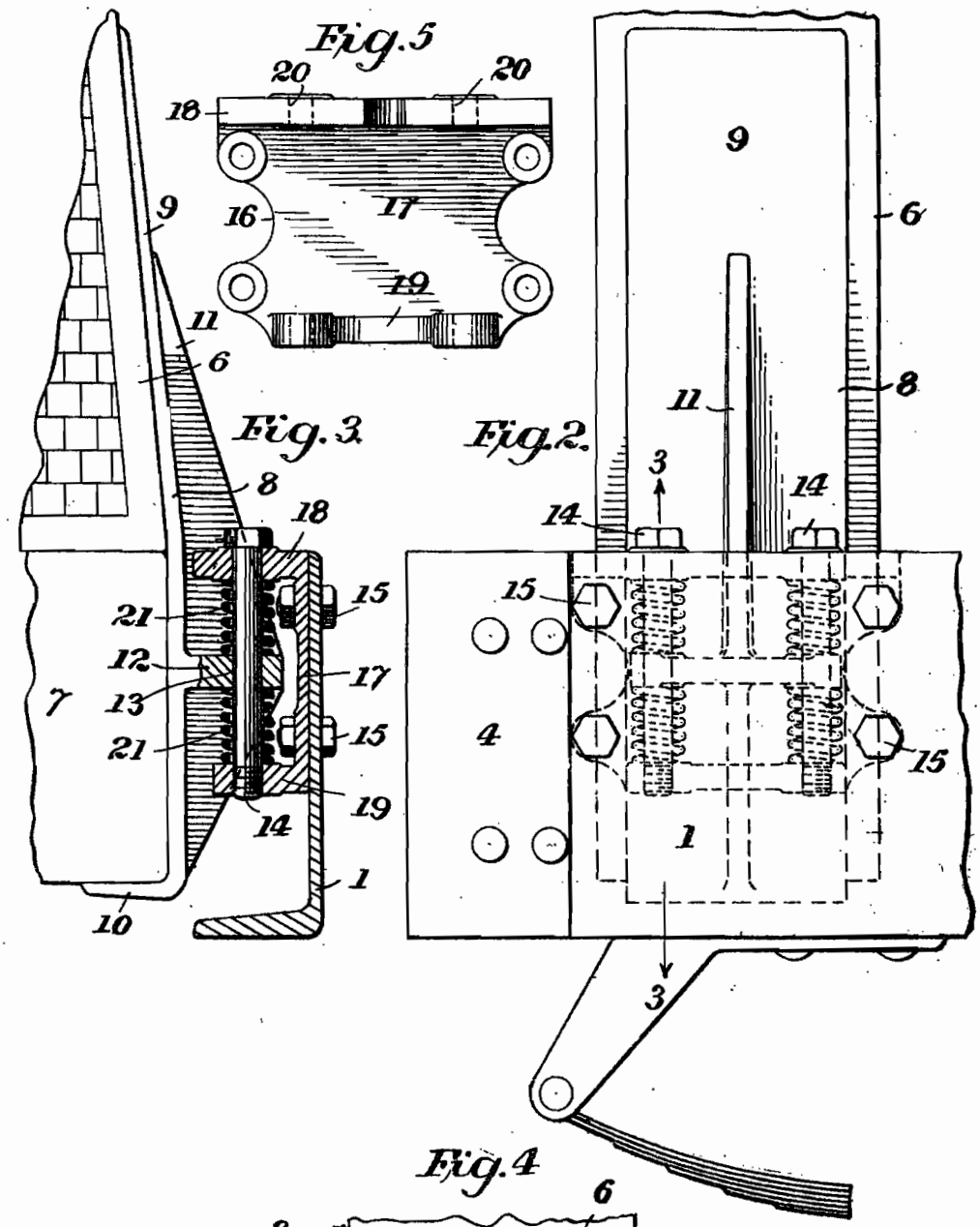

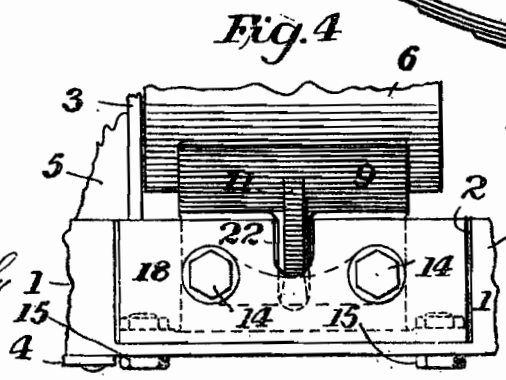

Witnesses

J. J. Winkel

J. J. McCarthy

Inventor.

Vincent Link

By Foster, Freeman, Melton & Coit

Attorneys.

UNITED STATES PATENT OFFICE.

VINCENT LINK, OF DETROIT, MICHIGAN, ASSIGNOR, BY MESNE ASSIGNMENTS, TO PACKARD MOTOR CAR COMPANY, OF DETROIT, MICHIGAN, A CORPORATION OF MICHIGAN.

MOTOR-VEHICLE.

1,083,330. Specification of Letters Patent. Patented Jan. 6, 1914.

Application filed December 7, 1908. Serial No. 466,398.

To all whom it may concern:

Be it known that I, VINCENT LINK, a citizen of the United States, and resident of Detroit, in the county of Wayne and State of Michigan, have invented certain new and useful Improvements in Motor-Vehicles, of which the following is a specification.

This invention relates to motor vehicles and particularly to means for supporting the radiator from the vehicle frame. Its objects are to provide simple and efficient means for flexibly supporting the radiator so as to relieve it from shocks and jars to which the frame may be subjected, and to make such supporting means in such form as to have an attractive appearance and of such construction that the radiator may be easily and quickly adjusted and secured to the supporting means, or removed therefrom.

A further object is to make the supporting means of such simple construction that it can be easily and cheaply made and applied to motor vehicles.

The novel features of the invention will be apparent from the following description, taken in connection with the accompanying drawings.

In the drawings: Figure 1 is a perspective view of a radiator, and the parts of a motor vehicle from which it is supported; Fig. 2 is a side elevation of the forward part of a motor truck with the radiator suspended in accordance with this invention; Fig. 3 is a view partly in section on the line 3—3 of Fig. 2; Fig. 4 is a plan view of a portion of the end of the radiator and its support; Fig. 5 is an elevation of the supporting bracket looking in a direction opposite to that of Fig. 2.

In these drawings, 1 designates the side bars of the frame of the motor vehicle, which are made in the form of channel bars. Each of these channel bars has a portion of its upper flange cut away, as shown at 2 in Fig. 4, for a purpose hereafter described. The front cross bar 3 in the form of an L-section, is secured to the side bars of the frame. Secured to the front part of the frame by the steel strap 4 is a bumper 5 as shown partly broken away in Fig. 4. The radiator and casing 6 have a tank 7 immediately below them, and a bracket 8 is secured to the sides of the radiator and tank and supports them. This bracket has a plate portion 9 which extends along the sides of the radiator and tank, having its lower end 10 bent under the end of the tank 7, as clearly shown in Fig. 3, for the purpose of firmly supporting the tank and radiator. This bracket also has a vertically extending rib 11 which tapers toward its ends and has a horizontal ledge or flange 12 extending longitudinally of the radiator. This flange has vertical longitudinally separated openings 13 through which bolts 14 pass for the purpose hereafter indicated. A supporting bracket 16 is detachably secured to the web of the side bars 1 by bolts 15, and this bracket has a web portion 17 fitting against the web portion of the side bars. It also has top and bottom horizontal flanges 18 and 19, the upper flange 18 being of such size as to fill the cut-away portion 2 of the upper flange of the side bars, as will be seen clearly in Fig. 4. These flanges 18 and 19 are each provided with two longitudinally separated openings 20, the openings in one flange being in line with those in the other, and the openings in the flange 19 being provided with screw threads to receive the threaded end of the bolts 14. The bolts 14 pass through the openings 20 in the two flanges just described, and also pass through openings 13 in the flange 12. Between the flange 12 and the flanges 18 and 19, and surrounding the bolts 14, are coiled springs 21 of sufficient strength to yieldingly support the radiator, as will be clearly seen by reference to Fig. 3. It will be understood that other yielding supporting means may be used in place of these springs. The upper flange 18 has a notch 22 to receive the rib 11 on the bracket 8.

It will be observed that the applicant's supporting means will yieldingly support the radiator, whereby twisting strains due to movements of the frame will not be transmitted directly to the radiator, but will be taken up by the yielding connection, and therefore the radiator will be relieved from shocks and jars which would tend to break the soldered joints with which its parts are connected. It will be further observed that the supporting means is of very simple construction, which can be easily and cheaply made and applied, and that when placed in position, most of its parts are concealed by the side channel bars and consequently do not detract in any way from the appearance of the machine. By supporting the radiator at two longitudinally separated points on

each side it will be understood that the radiator will be kept in vertical position by these yielding supports alone, although it is preferable to also provide a stay rod 25 extending from the top of the radiator to the dash of the vehicle to steady it when subjected to undue shocks.

Having thus described the invention, what is claimed is:

1. In a motor vehicle, the combination with the frame having side channel bars, of a radiator, a bracket secured to the inner side of said channel bar, a portion of the flange of the channel bar being cut away to receive the bracket, an inwardly projecting flange at the top of said bracket, an inwardly projecting flange below the top of said bracket, and connections between said flanges on the bracket for supporting the radiator.

2. In a motor vehicle, the combination with the frame having side bars, of a radiator, brackets secured to the sides of the radiator having longitudinal flanges provided with separated perforations, brackets secured to the side bars provided with two spaced longitudinal flanges each having two holes therethrough in line, bolts passing through said perforations and holes, and springs surrounding said bolts between said flanges for flexibly supporting the radiator at four points.

3. In a motor vehicle, the combination with the frame having side bars, of a radiator, a bracket secured to the side of the radiator, a bracket secured to the side bar, one of said brackets being provided with spaced flanges, and the other bracket being provided with a flange located between said spaced flanges, and springs between said flange and each of said spaced flanges for flexibly connecting said brackets and for supporting the radiator.

In testimony whereof I affix my signature in presence of two witnesses.

VINCENT LINK.

Witnesses:
DON T. HASTINGS,
HOWARD HARKNESS.

D12/169

DESIGN.

M. TIBBETTS.

BUMPER FOR CARRIAGES AND MOTOR VEHICLES.

APPLICATION FILED JAN. 28, 1909.

41,367. Patented May 9, 1911.

Fig. 1

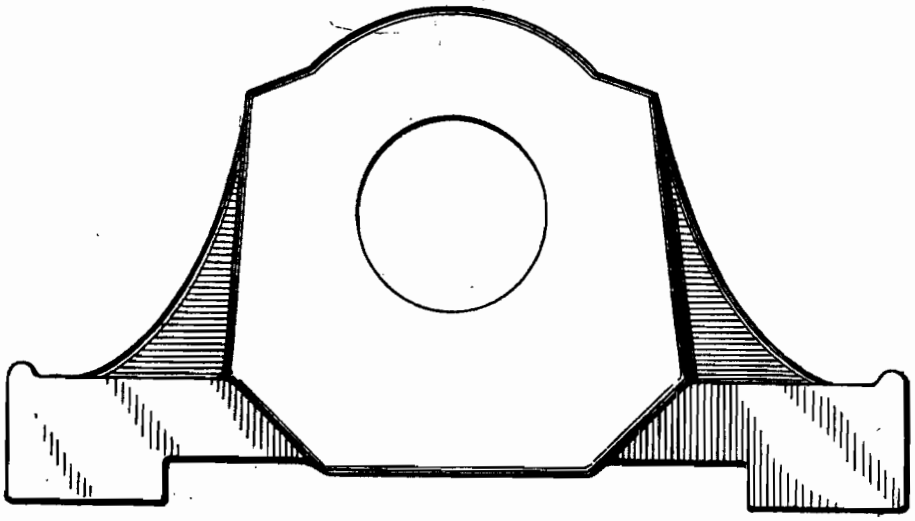

Fig. 2.

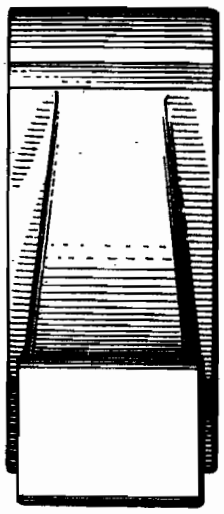

Witnesses
J. G. Pinkel
J. J. McCarthy

Inventor
Milton Tibbetts
By
Paxton, Freeman, Watson & Cox
Attorneys

WEBB & BOCORSELSKI, INC., WASHINGTON, D. C.

UNITED STATES PATENT OFFICE.

MILTON TIBBETTS, OF DETROIT, MICHIGAN, ASSIGNOR, BY MESNE ASSIGNMENTS, TO PACKARD MOTOR CAR COMPANY, OF DETROIT, MICHIGAN, A CORPORATION OF MICHIGAN.

DESIGN FOR A BUMPER FOR CARRIAGES AND MOTOR-VEHICLES.

41,367. Specification for Design. Patented May 9, 1911.

Application filed January 28, 1909. Serial No. 474,893. Term of patent 7 years.

To all whom it may concern:

Be it known that I, MILTON TIBBETTS, a citizen of the United States, residing at Detroit, in the county of Wayne and State of Michigan, have invented a new, original, and ornamental Design for Bumpers for Carriages and Motor-Vehicles, of which the following is a specification, reference being had to the accompanying drawing, forming part thereof.

In the drawing: Figure 1 is a side view of the bumper; and Fig. 2 is an end view.

The bumper as shown in the drawing includes a base portion made comparatively long and thin, the corners of which are at right angles and the bottom central portion of which is cut away. At the center of this base portion there is an upwardly projecting portion having the bottom corners cut away, and a central upwardly curved portion at the top. This central part has at its sides joining it to the base the curved tapering side pieces, all of the parts being so joined as to produce the ornamental design as shown.

I claim:

The ornamental design for a bumper for carriages and motor vehicles, as shown and described.

MILTON TIBBETTS.

Witnesses:

ARTHUR L. BRYANT,

A. E. T. HANSMANN.

Copies of this patent may be obtained for five cents each, by addressing the "Commissioner of Patents, Washington, D. C."

DESIGN.

M. TIBBETTS.

ELECTRIC SWITCH TERMINAL.

APPLICATION FILED JAN. 30, 1909.

44,155. Patented June 3, 1913.

Fig. 2.

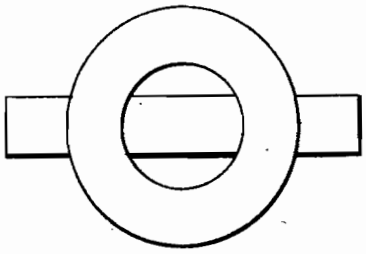

Fig. 1.

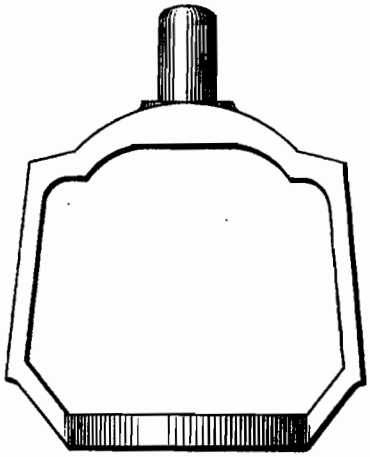

Witnesses
J. G. Stinkel
J. J. McCarthy

Inventor
Milton Tibbetts
By
Foster, Freeman, Watson & Coit
Attorneys

COLUMBIA PLANOGRAPH CO., WASHINGTON, D. C.

UNITED STATES PATENT OFFICE.

MILTON TIBBETTS, OF DETROIT, MICHIGAN, ASSIGNOR, BY MESNE ASSIGNMENTS, TO PACKARD MOTOR CAR COMPANY, OF DETROIT, MICHIGAN, A CORPORATION OF MICHIGAN.

DESIGN FOR AN ELECTRIC-SWITCH TERMINAL.

44,155. Specification for Design. **Patented June 3, 1913.**

Application filed January 30, 1909. Serial No. 475,302. Term of patent 7 years.

To all whom it may concern:

Be it known that I, MILTON TIBBETTS, a citizen of the United States, residing at Detroit, in the county of Wayne and State of Michigan, have invented a new, original, and ornamental Design for Electric-Switch Terminals, of which the following is a specification, reference being had to the accompanying drawing, forming part thereof.

In the drawing Figure 1 is a side view of an electric switch terminal embodying my invention; and Fig. 2 is a bottom plan view of the same.

My design includes a base portion circular in cross-section, having at opposite sides the upwardly inclined arms joining at an angle side bars inclined slightly toward each other. At the upper end of these side bars there is a cross bar of the peculiar curved and angular shape shown, having at its center the electric switch point.

I claim:

The ornamental design for an electric switch terminal, as shown and described.

MILTON TIBBETTS.

Witnesses:

ARTHUR L. BRYANT,
A. E. T. HAUSMANN.

Copies of this patent may be obtained for five cents each, by addressing the "Commissioner of Patents, Washington, D. C."

DESIGN.

M. TIBBETTS.

CASING FOR SIGHT FEED LUBRICATORS.

APPLICATION FILED FEB. 2, 1909.

41,369. Patented May 9, 1911.

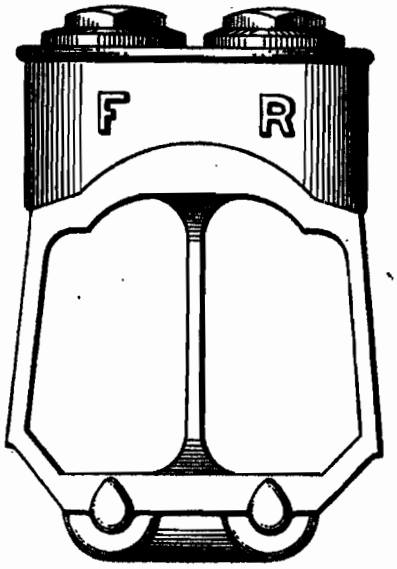

Witnesses
J. G. Stinkel
J. J. McCarthy

Inventor
Milton Tibbetts
By
Foster, Freeman, Watson & Coit
Attorneys

WEBB & BOCOBELSKI, INC., WASHINGTON, D. C.

UNITED STATES PATENT OFFICE.

MILTON TIBBETTS, OF DETROIT, MICHIGAN, ASSIGNOR, BY MESNE ASSIGNMENTS, TO PACKARD MOTOR CAR COMPANY, OF DETROIT, MICHIGAN, A CORPORATION OF MICHIGAN.

DESIGN FOR A CASING FOR SIGHT-FEED LUBRICATORS.

41,369. Specification for Design. Patented May 9, 1911.

Application filed February 2, 1909. Serial No. 475,720. Term of patent 7 years.

To all whom it may concern:

Be it known that I, MILTON TIBBETTS, a citizen of the United States, residing at Detroit, in the county of Wayne and State of Michigan, have invented a new, original, and ornamental Design for Casings for Sight-Feed Lubricators, of which the following is a specification, reference being had to the accompanying drawing, forming part thereof.

In the drawing the figure is a plan view of a casing for a sight feed lubricator showing my invention.

The casing includes an upper portion curved in cross section and a lower portion made up of parts rounded at right angles to the upper portion. The upper and lower portions are joined by a framework having the peculiar shape and appearance shown.

I claim:

The ornamental design for a casing for a sight feed lubricator, as shown and described.

MILTON TIBBETTS.

Witnesses:

ARTHUR L. BRYANT,
A. E. T. HAUSMANN.

Copies of this patent may be obtained for five cents each, by addressing the "Commissioner of Patents, Washington, D. C."

DESIGN.

M. TIBBETTS.

VEHICLE TIRE.

APPLICATION FILED FEB. 3, 1909.

41,400. Patented May 23, 1911.

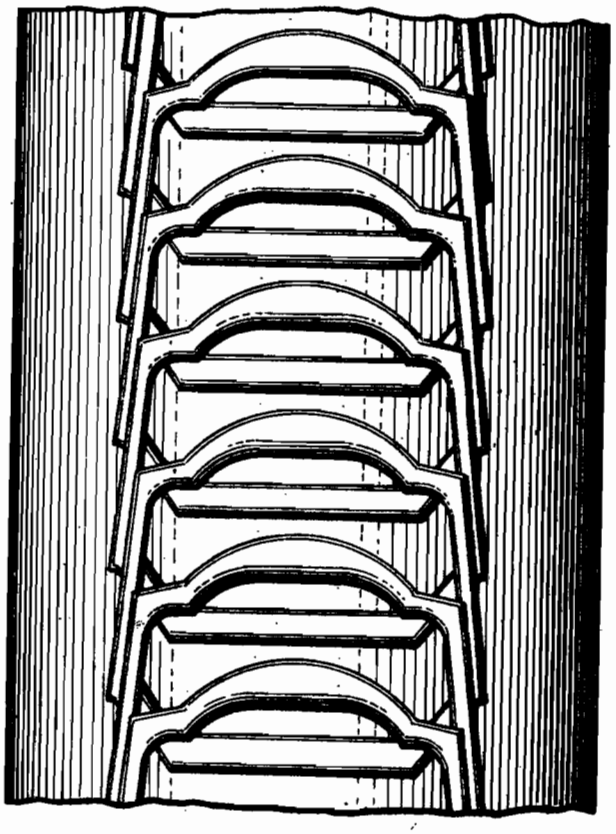

Witnesses
J. P. Tinkel
J. J. McCarthy

Inventor:
Milton Tibbetts
By
Foster, Freeman, Watson & Coit
Attorneys

WEBB & BOCORSELSKI, INC., WASHINGTON, D. C.

UNITED STATES PATENT OFFICE.

MILTON TIBBETTS, OF DETROIT, MICHIGAN, ASSIGNOR, BY MESNE ASSIGNMENTS, TO PACKARD MOTOR CAR COMPANY, OF DETROIT, MICHIGAN, A CORPORATION OF MICHIGAN.

DESIGN FOR A VEHICLE-TIRE.

41,400. Specification for Design. Patented May 23, 1911.

Application filed February 3, 1909. Serial No. 475,945. Term of patent 7 years.

To all whom it may concern:

Be it known that I, MILTON TIBBETTS, a citizen of the United States, residing at Detroit, in the county of Wayne and State of Michigan, have invented a new, original, and ornamental Design for Vehicle-Tires, of which the following is a specification, reference being had to the accompanying drawing, forming part thereof.

In the drawing the figure is a plan view of a portion of a tire showing my invention.

As shown in the drawing, the tire has on its outer surface, longitudinally thereof at the center, a peculiar and ornamental design made up of interlocked figures of peculiar shape. As will be seen from the drawing each figure has the appearance of having superposed thereon two other similar figures at different positions, and this line of figures on the tire gives to its central part a peculiar and ornamental effect.

I claim:

The ornamental design for a vehicle tire, as shown and described.

MILTON TIBBETTS.

Witnesses:

ARTHUR L. BRYANT,

A. E. T. HANSMANN.

Copies of this patent may be obtained for five cents each, by addressing the "Commissioner of Patents, Washington, D. C."

M. TIBBETTS.

CONTROLLING MECHANISM FOR MOTOR VEHICLES.

APPLICATION FILED FEB. 5, 1909.

1,055,834. Patented Mar. 11, 1913

3 SHEETS—SHEET 1.

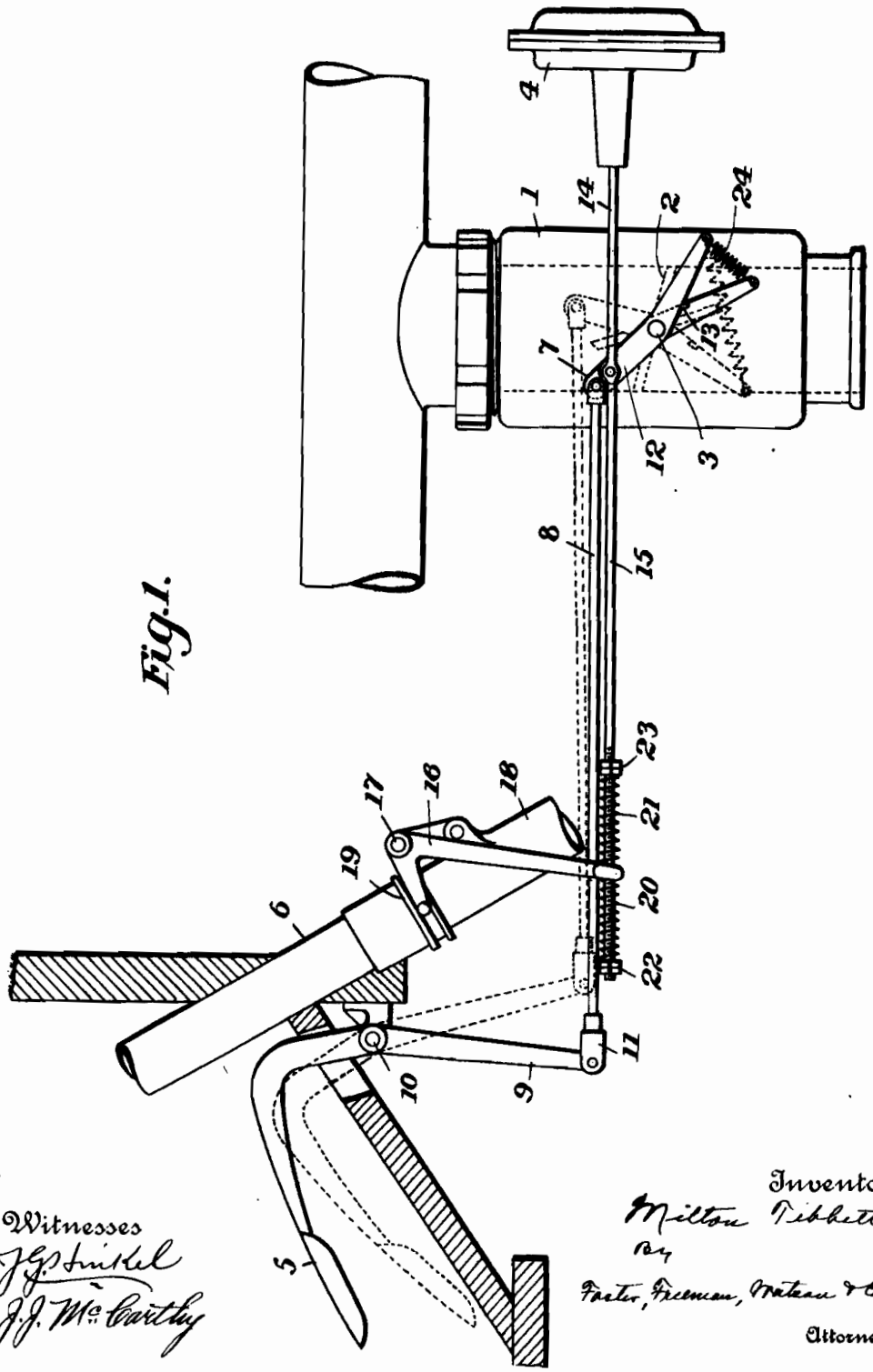

Fig. 1.

Witnesses
J. G. Stinkel
J. J. McCarthy

Inventor
Milton Tibbetts
By
Foster, Freeman, Watson & Coit
Attorneys

M. TIBBETTS.

CONTROLLING MECHANISM FOR MOTOR VEHICLES.

APPLICATION FILED FEB. 5, 1909.

1,055,834. Patented Mar. 11, 1913.

3 SHEETS—SHEET 2.

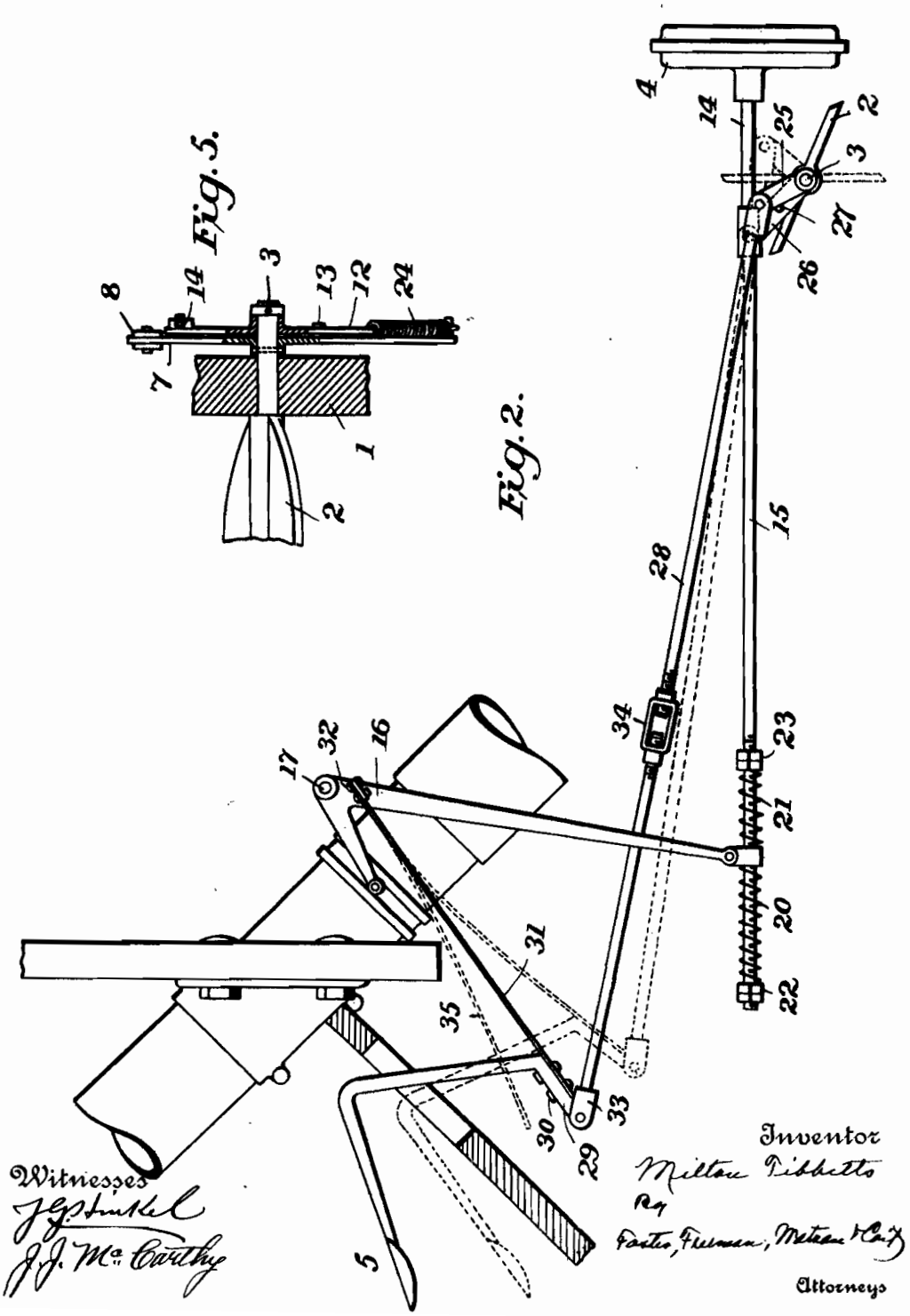

M. TIBBETTS.

CONTROLLING MECHANISM FOR MOTOR VEHICLES.

APPLICATION FILED FEB. 6, 1909.

1,055,834. Patented Mar. 11, 1913.

3 SHEETS—SHEET 3.

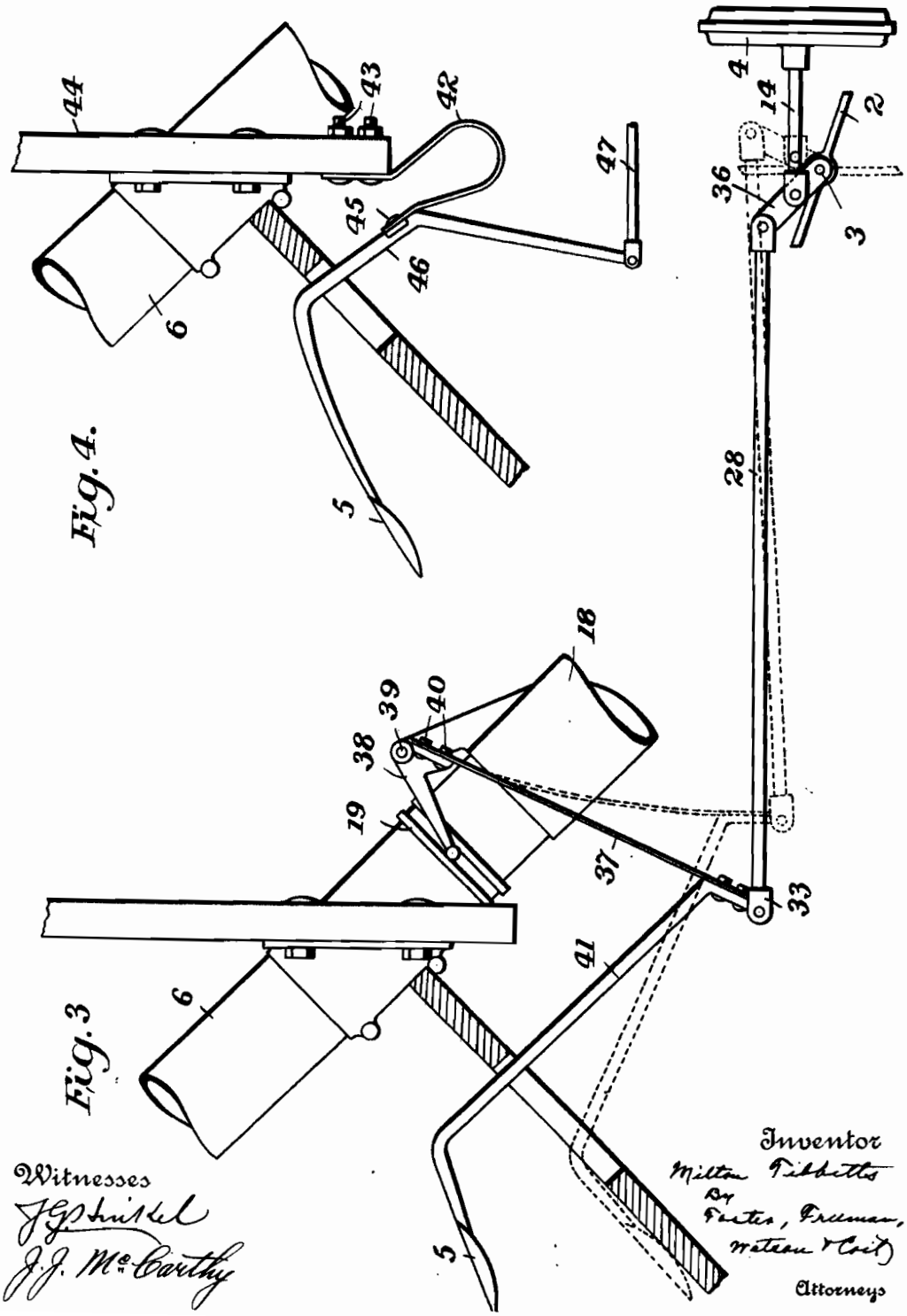

HAND & FOOT ACC

UNITED STATES PATENT OFFICE.

MILTON TIBBETTS, OF DETROIT, MICHIGAN, ASSIGNOR, BY MESNE ASSIGNMENTS, TO PACKARD MOTOR CAR COMPANY, OF DETROIT, MICHIGAN, A CORPORATION OF MICHIGAN.

CONTROLLING MECHANISM FOR MOTOR-VEHICLES.

1,055,834. Specification of Letters Patent. Patented Mar. 11, 1913.

Application filed February 5, 1909. Serial No. 476,485.

To all whom it may concern:

Be it known that I, MILTON TIBBETTS, a citizen of the United States, and resident of Detroit, in the county of Wayne and State of Michigan, have invented certain new and useful Improvements in Controlling Mechanism for Motor-Vehicles, of which the following is a specification.

This invention relates to the controlling mechanism of hydrocarbon engines, and has particular reference to the throttle control in motor vehicles.

It consists in novel means for supporting the various sets of operating mechanism, the means for connecting them together, and the means for connecting them to the throttle valve, whereby certain novel functions and results are secured.

As hereinafter set forth I have in the present instance applied the various features of my invention to a motor vehicle provided with an automatic governor, a hand lever and a foot lever, all adapted to operate the throttle valve in the intake pipe of the hydrocarbon motor.

It will be understood that the various features of my invention are not confined to use in the particular form and combination shown.

The novel features of the invention will be apparent from the following description taken in connection with the accompanying drawings.

In the drawings:—Figure 1 is a side elevation of the intake pipe of a hydrocarbon motor, together with controlling devices for the throttle valve embodying some features of my invention. Fig. 2 is a side elevation of the controlling device having a slightly different arrangement. Fig. 3 is a view similar to Fig. 2 showing a different connection between the throttle valve and hand lever; Fig. 4 is a side elevation showing a modified spring support for the foot lever; and Fig. 5 is a section through the shaft of the throttle valve showing the connection of the operating arms.

Referring particularly to Fig. 1, I have illustrated the intake pipe 1 for the combustible mixture which passes to the motor, and in this pipe I have placed the ordinary butterfly throttle valve 2 upon the shaft 3 pivoted in the intake pipe 1. This throttle valve is operated by an automatic governor 4, by a foot lever 5 called the "accelerator pedal," and by a hand lever on the top of the steering column 6. This last lever is not shown in the drawings, but will be understood by those skilled in the art. In the form shown in Fig. 1, the operating arm 7 is rigidly secured to the shaft 3 of the throttle valve on the outside of the intake pipe and the rod 8 connects this arm 7 with the downwardly depending arm 9 of the accelerator pedal 5, which is pivotally supported at 10. The connection between the rod 8 and arm 9 is made by the clevis 11 which may be made adjustable to regulate the length of the connection with the valve. An arm 12 is loosely mounted upon the shaft 3 outside of and immediately beside the arm 7, and it will be observed that the arm 7 is provided with a stop 13 which projects in the path of the arm 12, thus preventing the arm 12 from passing the arm 7 when rotating in one direction. To one end of the arm 12 is secured a rod 14 connected with the governor 4 and a rod 15 connected with the depending arm of the bell crank lever 16 pivotally mounted at 17 upon the fixed base 18 of the steering column. The bell crank lever 16 is operated by the sliding sleeve 19 carried by the steering column, and in turn operated by the hand lever at the top of the steering column through mechanism extending down within that column. The rod 15 is surrounded by coiled springs 20, 21 held in place by the adjustable nuts 22, 23, and these springs bear upon opposite sides of the depending arm of the bell crank lever 16, thus furnishing a flexible connection between the hand lever and the arm 12 of the throttle valve. The lower ends of the arms 7 and 12 are connected by a spring 24 which tends to draw those arms together and hold them in the position shown in full lines in Fig. 1, the strength of this spring being sufficient to make the fixed arm 7 and the connected throttle valve turn with the loose arm 12, unless the arm 7 is positively held against turning.

It will be observed that in the above construction the accelerator pedal 5 is rigidly connected to the throttle valve and that any motion of that pedal will be directly communicated to the valve. The governor 4 is rigidly connected to the arm 12, but that arm is not rigidly connected to the throttle

valve except when the arm 12 engages the stop 13 and the rigid connection then operates only in one direction. The connection is flexible in closing the valve by reason of spring 24 and is rigid in opening the valve after the two arms are in contact. The hand lever is flexibly connected through springs 20 and 21 to the arm 12 and consequently has no rigid connection with the throttle valve at any time. It will be observed that by this construction it is not necessary in operating the accelerator pedal 5 to overcome the force of the governor 4, tending to close the throttle valve, since such valve may be positively opened by the foot pedal without moving the governor as is clearly illustrated in dotted lines in Fig. 1, where the loose arm 12 remains stationary and the fixed arm 7 moves with relation thereto, expanding the spring 24. The only force to be overcome in this operation is the tension of the spring 24 which may be made very slight. The spring 24 should however be made sufficiently strong to return the accelerator pedal to its elevated position in case no separate spring is used for that purpose.

In the modification shown in Fig. 2 the connection between the governor and hand lever and the throttle valve is substantially the same as in the form shown in Fig. 1, but I have here shown a different means for supporting the accelerator pedal, and have shown different means for securing the spring connection between the fixed and loose arm on the throttle valve. In this instance the arm 25 is rigidly secured to the shaft 3 of the throttle valve and the arm 26 provided with a stop 27 is mounted to turn loosely upon the shaft 3 and is connected to the governor by the rod 14 and to the bell crank lever 16 by the rod 15. The rod 28 is connected to the fixed arm 25 and to the bottom portion 29 of the foot pedal 5. In this instance the foot pedal is not mounted upon a pivot, but is secured by bolts 30 to the lower end of a leaf spring 31 which spring is secured at its upper end by bolts 32 to the bell crank lever 16 near its pivot 17. The spring 31 not only supports the accelerator pedal without any pivot joint, but also performs the functions which are performed by the spring 24 in the form shown in Fig. 1. In other words the spring 31 tends to keep the arms 25 and 26 together so that the throttle valve will normally open and close as the loosely mounted arm 26 is turned. The tension of the spring 31 may be adjusted in any suitable way, such as by the adjustment of the clevis 33 upon the end of the rod 28, which changes the length of that rod, or by a turnbuckle 34 on the rod 28. In this figure of the drawings I have shown the spring 31 in dotted lines at 35, this being intended to represent the position which the spring would occupy if it were not held flexed by its connection with the throttle valve.

In Fig. 3 I have shown a modified connection between the hand lever and the throttle valve and have used the flexible spring support for the accelerator pedal as a part of that connection. In this instance the foot pedal 5 is connected with the rod 28 in substantially the same manner as in Fig. 2, and this rod 28 is connected to the arm 36, rigidly secured to the shaft of the throttle valve. The accelerator pedal is carried by the lower end of the flexible leaf spring 37 which is secured to the bell crank lever 38 pivoted at 39 by means of the bolts 40. The bell crank lever which is operated by the hand lever at the top of the steering column 6 is not in this instance provided with a separate arm connected with the throttle valve, but the sole connection is made through the spring 37. It will be seen that a depression of the sleeve 19 by the hand lever will turn the bell crank lever 38 upon its pivot 39 and will thereby tend to move the spring 37 to the right, carrying the rod 28 with it, and turning the throttle valve upon its shaft to open it. The connection between the hand lever and the throttle valve is thus flexible and the spring 37 performs the functions, in so far as this lever is concerned, of the springs 20, 21 in the form shown in Fig. 1. In order to secure proper leverage I prefer to arrange the spring 37 more nearly vertical than the spring 31 in the form shown in Fig. 2, and for that purpose provide the foot pedal 5 with a long stem 41. In this form of the device I have shown the governor 4 connected directly to the fixed arm 36 of the throttle valve, but it will be understood that my invention contemplates the use of the loosely mounted arm such as shown in Figs. 1 and 2, connected with the governor, whereby it will not be necessary to overcome the force of the governor in operating the accelerator pedal. The hand lever controlling the bell crank lever 38 may be set in various positions, thus adjusting the tension of the spring 37, and regulating the control of the throttle valve.

In Fig. 4, I have illustrated a curved spring 42 connected by bolts 43 to the lower edge of the vehicle dash 44, and this spring is secured by a screw 45 to the bent portion 46 of the accelerator pedal 5. In this form I have not shown the other connections to the throttle valve, but it will be understood that they are substantially those shown in Figs. 1 and 2, the rod 47 being connected to the fixed arm of the throttle valve. The spring 42 is made strong enough to normally support the pedal 5 in its elevated position, as shown in Fig. 4, and consequently with the use of this spring, the spring 24, de-

scribed in connection with Fig. 2 for holding the two operating arms of the throttle together, may be made very weak and only strong enough to overcome the pressure of gas in the intake. The spring 42 furthermore may be made sufficiently resilient to hold the two operating arms together as described in connection with Fig. 2, and in that instance the spring 24 may be dispensed with entirely. It will be understood that in this instance, as well as in the other forms, means are provided for adjusting the tension of the spring.

Having thus described the invention, what is claimed is:

1. In a motor vehicle controlling means, the combination with the motor inlet pipe and throttle valve therein, of two actuating devices for said valve, one of which is connected positively therewith and the other of which is connected to positively open said valve and to flexibly close it.

2. In a motor vehicle controlling means, the combination with the motor inlet pipe and throttle valve therein, of two actuating devices for said valve, one of which is connected positively therewith and the other of which is connected to positively open said valve and to flexibly close it, and a manual operating lever for operating said last mentioned actuating device.

3. In a motor vehicle controlling means, the combination with the motor inlet pipe and throttle valve therein, of two actuating arms for said valve, one of which is connected positively therewith and the other of which is connected to positively open said valve and to flexibly close it, and means for operating each of said arms independently of the other.

4. In a motor vehicle controlling means, the combination with the motor inlet pipe and throttle valve therein, of two actuating arms for said valve, one of which is connected positively therewith and the other of which is connected to positively open said valve and to flexibly close it, manual controlled means for operating one of said arms and a governor for operating the other arm.

5. In a motor vehicle controlling means, the combination with the motor inlet pipe and throttle valve therein, of two actuating arms for said valve, one of which is connected positively therewith and the other of which is connected to positively open said valve and to flexibly close it, a foot pedal for operating one of said arms and hand and governor devices for operating the other arm.

6. In a motor vehicle controlling means, the combination with the inlet pipe and throttle valve therein, of two actuating arms for said valve one of which is positively connected therewith, a stop on one of said arms to so connect the positive arm with the other arm that the former is positively moved by the latter in one direction, and a spring to yieldably hold the stop against the other arm.

7. In a motor vehicle controlling means, the combination with the inlet pipe and throttle valve therein, of two actuating arms for said valve one of which is positively connected therewith and the other of which is mounted to turn independently of the valve, the said arms being so mounted that the freely movable arm will make contact with the positively connected arm when moved in one direction, a spring tending to prevent the separation of said arms and independent means for operating the two arms.

8. In a motor vehicle controlling means, the combination with the motor inlet pipe and throttle valve therein, of two actuating devices for said valve one of which is connected positively therewith and the other of which is connected to positively open said valve and to flexibly close it, a lever for controlling one of said devices, and a flexible connection between said lever and the body of the vehicle.

9. In a motor vehicle controlling means, the combination with the motor inlet pipe and throttle valve therein, of an actuating arm positively connected with said valve, a pedal lever for operating said arm, a second arm adapted to positively open said valve when turned in one direction and having connections for flexibly closing it when turned in the opposite direction, and a governor directly connected to said last mentioned arm for actuating it.

10. In a motor vehicle controlling means, the combination with the motor inlet pipe and throttle valve therein, of an actuating arm positively connected with said valve, a pedal lever for operating said arm, a second arm adapted to positively open said valve when turned in one direction and having connections for flexibly closing it when turned in the opposite direction, a governor directly connected to said last mentioned arm for actuating it, and hand operated actuating means connected with said last mentioned arm.

11. In a motor vehicle controlling means, the combination with the motor inlet pipe and throttle valve therein, of an actuating arm positively connected with said valve, a pedal lever for operating said arm, a second arm adapted to positively open said valve when turned in one direction and having connections for flexibly closing it when turned in the opposite direction, a governor directly connected to said last mentioned arm for actuating it, and hand operated actuating means flexibly connected with said last mentioned arm.

12. In a motor vehicle controlling means, the combination with the motor inlet pipe, of a throttle valve therein, an arm rigidly

connected to said valve for turning it, a second arm mounted to turn freely concentric with the first arm, means on the arms for preventing one from passing the other, separate means for operating said arms, and yielding means tending to prevent the separation of said arms.

13. In a motor vehicle controlling means, the combination with the vehicle body and a motor part to be controlled, of a member to control said part, and a flexible support for said member on said body.

14. In a motor vehicle controlling means, the combination with the vehicle body and a motor part to be controlled, of a pedal lever to control said part, and a flexible support for said lever on said body.

15. In a motor vehicle controlling means, the combination with the vehicle body, the motor inlet pipe and throttle valve therein, of a controlling lever connected with said valve, and a spring supporting the lever on the vehicle body.

16. In a motor vehicle controlling means, the combination with the vehicle body, the motor inlet pipe and throttle valve therein, of a controlling lever connected with said valve, and a leaf spring connecting said lever with the vehicle body and constituting a flexible support for the lever.

17. In a motor vehicle controlling means, the combination with the vehicle body and a motor part to be controlled, of a longitudinally movable rod connected at one end to the said motor part, a controlling member, a leaf spring connecting said member with and supporting it from the vehicle body, and connections between said member and rod.

18. In a motor vehicle controlling means, the combination with the motor inlet pipe and the throttle valve therein, of an actuating arm for said throttle, a hand control lever, a spring connection between said lever and said arm, and a pedal lever supported by said spring.

19. In a motor vehicle controlling means, the combination with the motor inlet pipe and the throttle valve therein, of an actuating arm for said throttle, a hand control lever, a spring connection between said lever and said arm, and a pedal lever supported by said spring and pivotally connected to said arm.

20. In a motor vehicle controlling means, the combination with the motor inlet pipe and the throttle valve therein, of two actuating devices for said valve, the first of which is connected to positively open and close said valve and the second of which is connected to positively open said valve only, a pedal lever unyieldably connected with said first device, a hand controlled lever yieldably connected with said second device, and a spring supporting said pedal lever and adapted to return it to normal position after being depressed, said spring also constituting means for connecting said second device to flexibly close said throttle valve.

21. In a motor vehicle controlling means, the combination with the motor inlet pipe and the throttle valve therein, of two actuating devices for said valve, the first of which is connected to positively open and close said valve and the second of which is connected to positively open said valve only, a pedal lever unyieldably connected with said first device, a hand controlled lever yieldably connected and a governor positively connected with said second device, and a spring supporting said pedal lever and adapted to return it to normal position after being depressed, said spring also constituting means for connecting said second device to flexibly close said throttle valve.

22. In a motor vehicle controlling means, the combination with the motor inlet pipe and the throttle valve therein, of a spring supported operating device for said throttle tending normally to hold said throttle closed.

23. In a motor vehicle controlling means, the combination with the motor inlet pipe and the throttle valve therein, of an operating device for said throttle, a leaf spring constituting the support for said device and tending to hold said throttle closed.

In testimony whereof I affix my signature in presence of two witnesses.

MILTON TIBBETTS.

Witnesses:

ARTHUR L. BRYANT,
B. C. RUST.

TRUCK

V. LINK.

FOLDING STARTING CRANK FOR MOTOR VEHICLES.

APPLICATION FILED FEB. 15, 1909.

1,059,675. Patented Apr. 22, 1913.

2 SHEETS—SHEET 1.

Fig. 1.

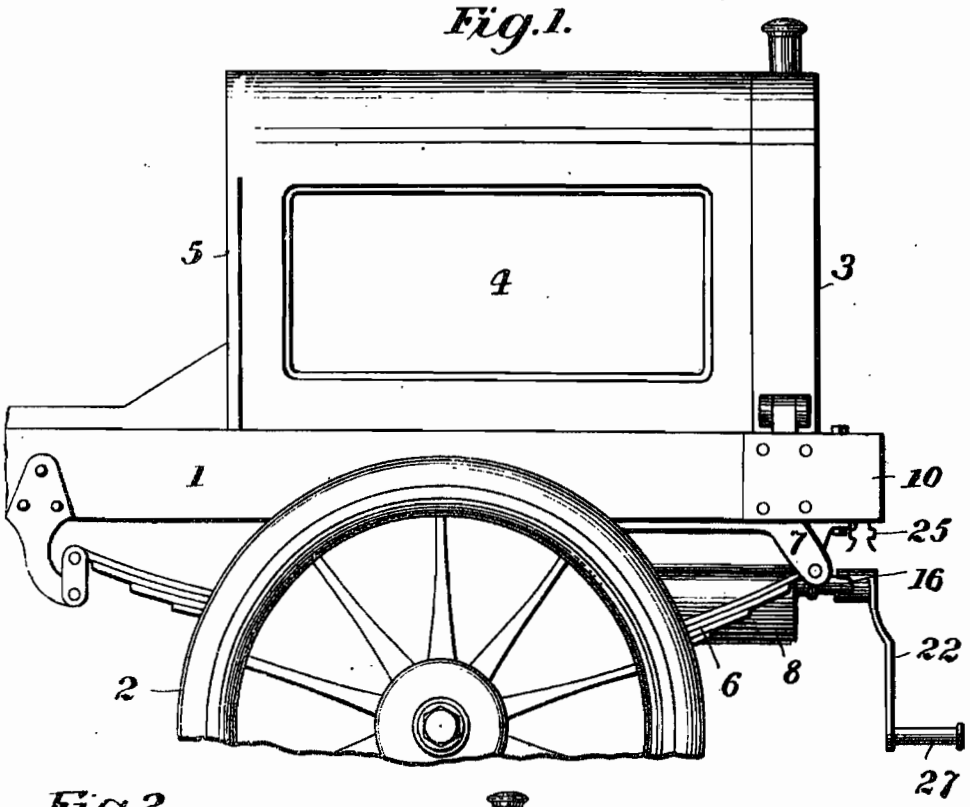

Fig. 2.

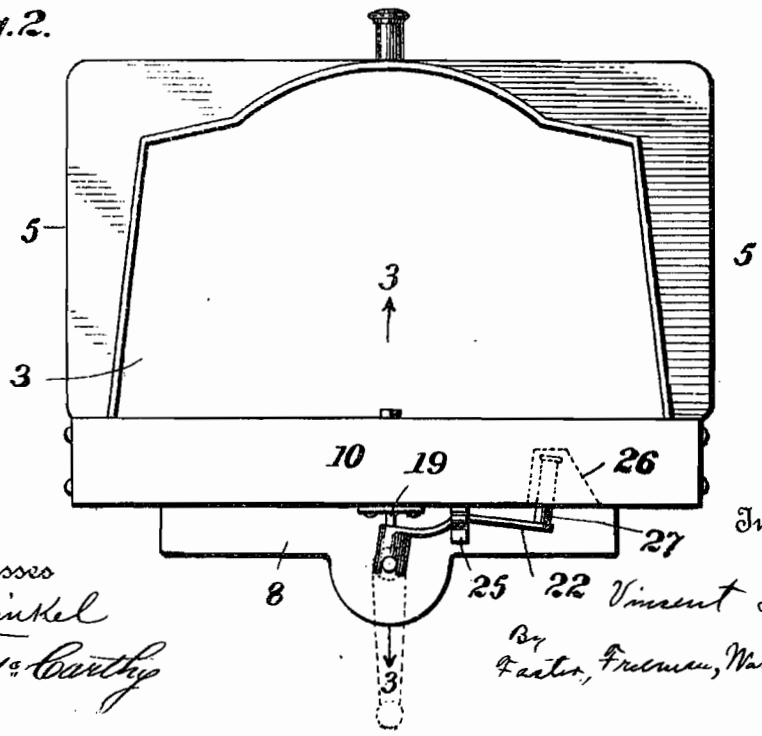

Witnesses
J. G. Pinkel
J. J. McCarthy

Inventor
Vincent Link
By Foster, Freeman, Watson & Coit
Attorneys

V. LINK.

FOLDING STARTING CRANK FOR MOTOR VEHICLES.

APPLICATION FILED FEB. 15, 1909.

1,059,675. Patented Apr. 22, 1913.

2 SHEETS—SHEET 2.

Fig. 3.

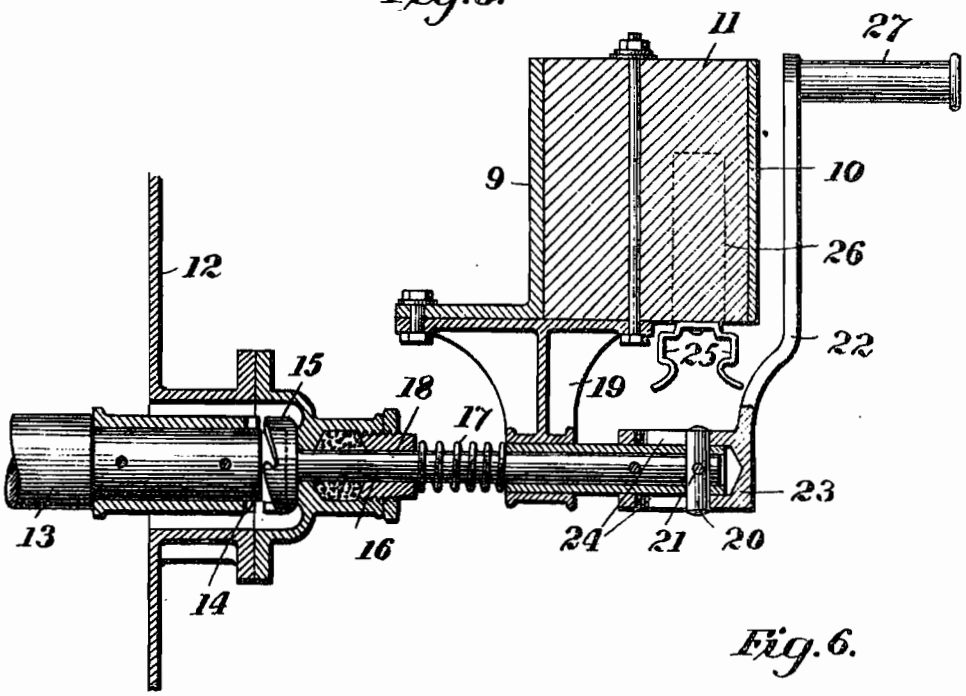

Fig. 6.

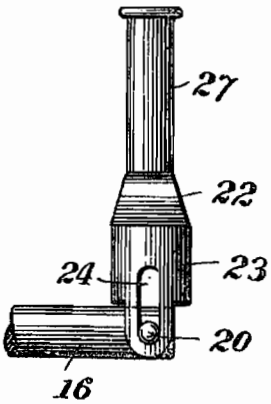

Fig. 4.

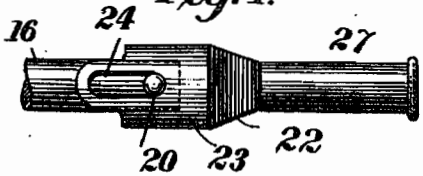

Fig. 5.

Witnesses

J. J. Stirkel

J. J. McCarthy

Inventor

Vincent Link

By

Foster, Freeman, Watson & Coit

Attorneys

UNITED STATES PATENT OFFICE.

VINCENT LINK, OF DETROIT, MICHIGAN, ASSIGNOR, BY MESNE ASSIGNMENTS, TO PACKARD MOTOR CAR COMPANY, OF DETROIT, MICHIGAN, A CORPORATION OF MICHIGAN.

FOLDING STARTING-CRANK FOR MOTOR-VEHICLES.

1,059,675. Specification of Letters Patent. Patented Apr. 22, 1913.

Application filed February 15, 1909. Serial No. 477,933.

To all whom it may concern:

Be it known that I, VINCENT LINK, a citizen of the United States, and resident of Detroit, in the county of Wayne and State of Michigan, have invented certain new and useful Improvements in Folding Starting-Cranks for Motor-Vehicles, of which the following is a specification.

This invention relates to motor vehicles and particularly to a starting crank therefor which may be folded.

The invention is shown as applied to the starting shaft of a truck motor.

In most trucks in which the crank shaft of the motor is arranged longitudinally near the front of the vehicle, a starting crank is employed which projects forwardly of the frame in order that it may be in convenient position for cranking the motor. On account of its position therefore, the starting crank is frequently bent or broken by contact with obstructions met with in the use of the truck. Detachable starting cranks have been used to some extent, but are unsatisfactory because they are liable to be lost.

The main object of the present invention is to provide a starting crank which will project beyond the frame in convenient position for use in starting the motor and which when not in use may be folded to a safe position within the margin of the frame where it will be protected from accidental injury. Notwithstanding its ability to fold, the structure of the crank is such that it makes a firm and rigid connection with the starting shaft, when in operative position.

In the drawings,—Figure 1 is a side elevation of the forward part of a motor truck, showing the starting crank projecting in operative position; Fig. 2 is a front elevation of the truck shown in Fig. 1 with the starting crank in folded position in full lines and in operative position in dotted lines; Fig. 3 is a vertical longitudinal section through the forward part of the truck frame and the starting crank and connections, taken on the line 3—3 of Fig. 2; Fig. 4 is a bottom view of the starting crank shown in Fig. 3; Fig. 5 is a view similar to Fig. 4 with the starting crank ready to fold; and Fig. 6 is a view similar to Fig. 4 with the starting crank folded.

Various parts of the motor truck shown in the various figures may be designated as follows: 1 is the frame, 2 the front wheel, 3 the radiator, 4 the hood, 5 the dash, 6 the front spring and 7 the front hanger therefor.

8 represents the dust pan extending between the forward part of the crank case and the front cross beam of the frame.

The front cross bar 9 of the frame is shown in section in Fig. 3 and secured thereto by a steel strap 10 is a wood beam 11 which beam and strap act as a front bumper for the truck. It is intended that this bumper shall take any shocks due to collision with vehicles or other obstacles in the operation of the truck. Referring further to Fig. 3, a fragment of the motor crank case 12 is shown, housing the crank shaft 13 on the forward end of which is a clutch member 14 which coöperates with the clutch member 15 on the rear end of the starting shaft 16, which latter shaft is yieldably held in inoperative position by a suitable spring 17. It will be seen that the starting shaft is journaled in a suitable packed bearing 18 in the forward end of the crank case and in a bracket 19 bolted to the cross bar 9 and bumper 11 of the frame.

Heretofore, the starting crank has ordinarily been securely keyed to the front end of the shaft 16 and when not in use would hang as illustrated in Fig. 1, then being the most forward part of the vehicle and in a position where it would be liable to be injured by collisions as suggested above. In the present invention a transverse cylindrical key 20 passes through a suitable opening near the forward end of the starting shaft 16 and is secured thereto by a pin 21, and the starting crank 22 is formed with a hollow cylindrical hub 23 which is adapted to loosely fit the forward end of the starting shaft 16 and is provided with oppositely disposed longitudinal slots or keyways 24 in which the projecting ends of the key 20 are adapted to slide. The rear end of the hub 23 is somewhat cut away between the slots 24, thus leaving ears containing those slots, and with this construction it will be seen upon reference to Figs. 3 to 6 that the crank 22 may be drawn forward relative to the shaft 16 from its position shown in Figs. 3 and 4 to the position shown in Fig. 5, and when in said latter position the crank may be turned bodily on the key 20 as a pivot into the position shown in Fig. 6, wherein the hub of the

starting crank is at a right angle to the starting shaft. As the shaft 16 is wholly within the forward edge of the bumper 10, the starting crank when folded to the position shown in Fig. 6 is also within the forward edge of said bumper and may then be turned to the position shown in Fig. 2 in full lines and secured against the bumper 10 by a spring clip 25. For convenience in holding the starting crank closer to the bumper an opening 26 is made in the wood beam 11 to house the handle 27 of the starting crank. The construction of the spring clip 25 is fully illustrated in Figs. 1, 2, and 3 and need not be further described.

It will be noted that a rearward force applied to the crank will lock the same against folding movement on the starting shaft while a forward movement will unlock the same so that it can be moved to folding position. This is a convenient arrangement since a rearward movement is necessarily given to the crank and the starting shaft so as to clutch the starting shaft with the crank shaft. Therefore by applying a rearward force to the crank this crank is simultaneously locked on the starting shaft and the starting shaft is thrown into engagement with the crank shaft.

Having thus described the invention, what is claimed is:

1. In a motor vehicle, the combination with the frame and a bumper thereon, of a hydrocarbon motor carried by said frame, a starting shaft for said motor, a starting crank connected to said shaft projecting beyond said bumper, and means for folding said crank to a position within the margin of said bumper.

2. In a motor vehicle, the combination with the vehicle frame, of a hydrocarbon motor carried thereby, a starting shaft for said motor, a starting crank connected to said shaft projecting beyond said frame, means for folding said crank to a position within the margin of said frame, and means for securing said folded crank to said frame.

3. In a motor vehicle, the combination with the frame, provided with a front cross beam constituting a bumper, of a hydrocarbon motor carried by the frame, a starting crank for said motor projecting beyond said bumper, means for folding said crank beneath said bumper, and means for securing the folded crank to said bumper.

4. In a motor vehicle, the combination with the frame, provided with a front cross beam constituting a bumper, of a hydrocarbon motor carried by the frame, a starting crank for said motor projecting beyond said bumper, means for folding said crank, the said bumper being provided with a recess to receive the handle of said crank when folded, and a spring catch on the frame for engaging the arm of said crank and retaining it in folded position.

5. In a motor vehicle, the combination with the vehicle frame, of a hydrocarbon motor carried by said frame, a starting shaft for said motor, a starting crank connected to said shaft and projecting beyond the forward part of said frame, and means for folding said crank to a position within the margin of the front of said frame.

6. In a motor vehicle, the combination with the vehicle frame, of a hydrocarbon motor carried by said frame, a radiator on the front of said frame, a starting shaft for said motor, a starting crank connected to said shaft and projecting beyond the radiator, and means for folding said crank underneath the radiator.

7. The combination with an automobile frame and the crank-shaft of an automobile, of a longitudinally movable starting crank supported by the automobile frame and adapted to be moved out of alinement with the crank-shaft and means for holding the crank in said position.

In testimony whereof I affix my signature in presence of two witnesses.

VINCENT LINK.

Witnesses:
C. T. DALE,
E. N. HEARN.

M. TIBBETTS.

ENGINE.

APPLICATION FILED MAR. 18, 1909.

1,113,510.

Patented Oct. 13, 1914.

4 SHEETS—SHEET 1.

Fig. 2.

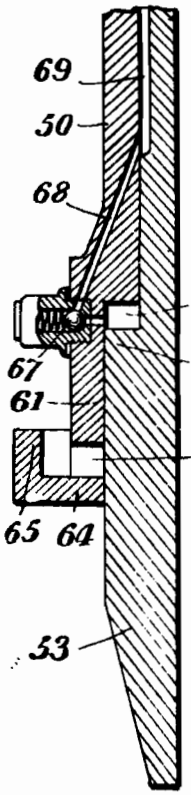

Fig. 1.

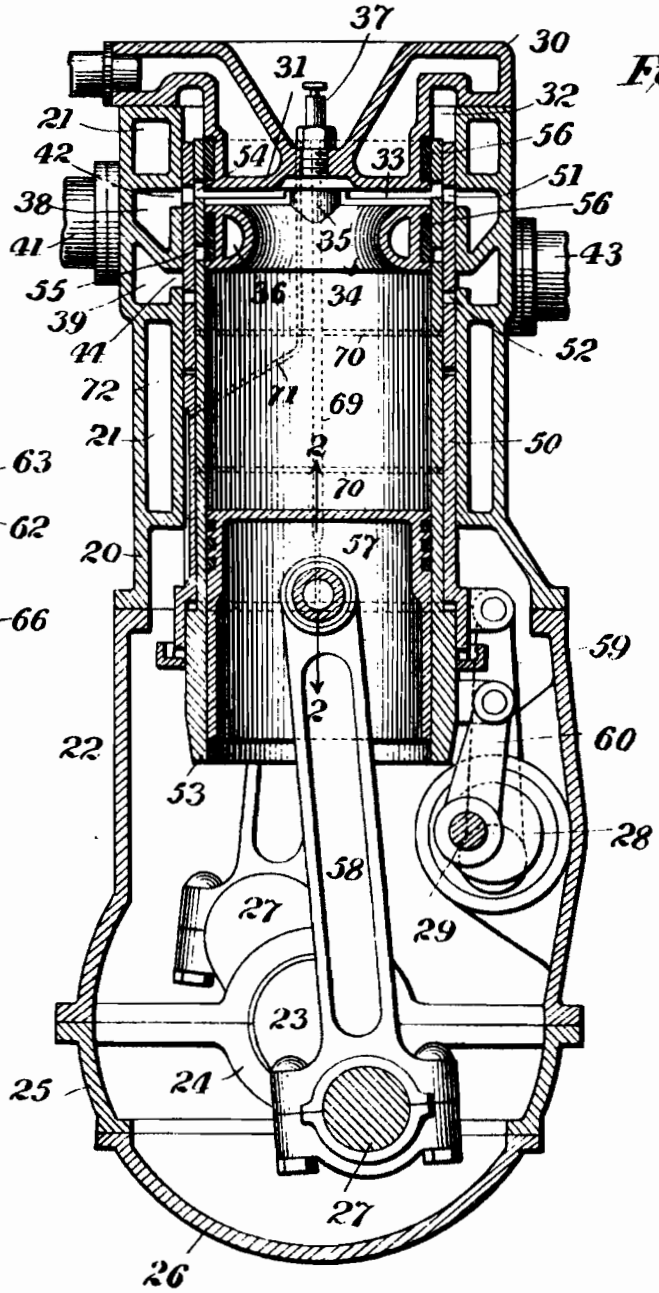

Witnesses

J. G. Stinkel

J. J. McCarthy

Inventor

Milton Tibbetts

By Foster, Freeman, Watson & Coit

Attorneys

M. TIBBETTS.

ENGINE.

APPLICATION FILED MAR. 18, 1909.

1,113,510. Patented Oct. 13, 1914

4 SHEETS-SHEET 2.

Fig. 3.

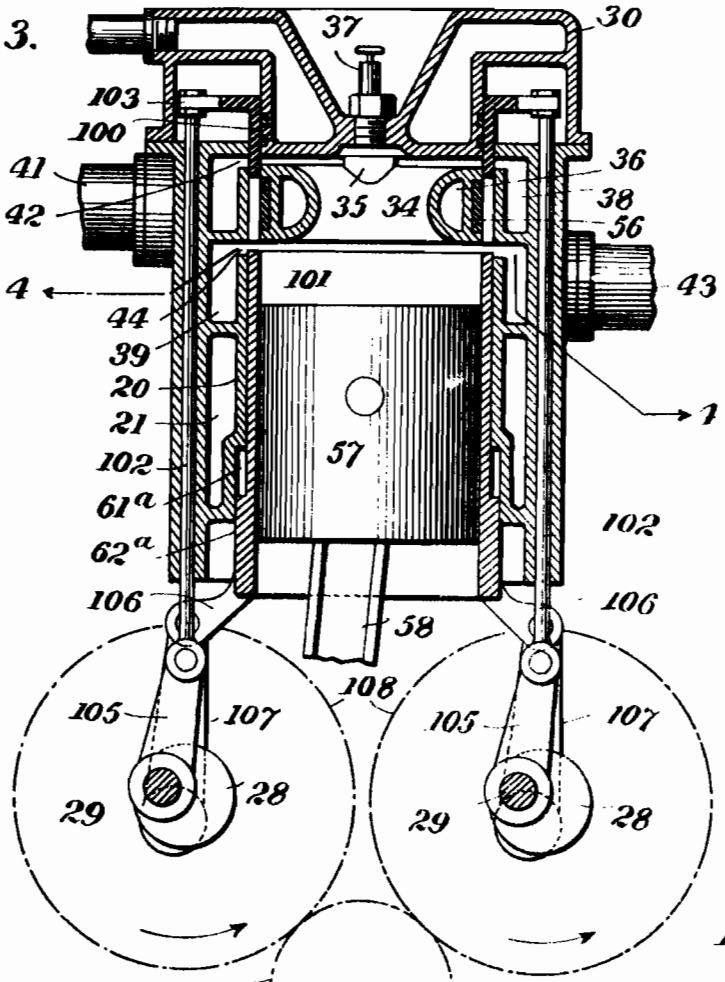

Fig. 5.

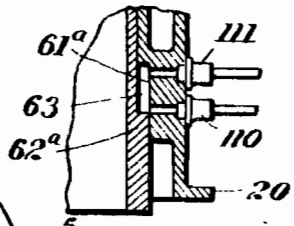

Fig. 4.

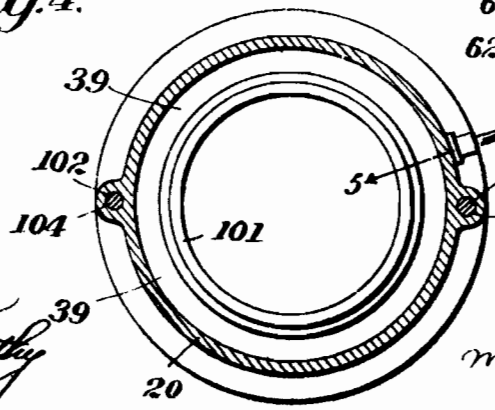

Witnesses
J. G. Stinkel
J. J. McCarthy

Inventor
Milton Tibbetts
By
Foster Freeman
Watson & Coleman
Attorneys

M. TIBBETTS.

ENGINE.

APPLICATION FILED MAR. 18, 1909.

1,113,510.

Patented Oct. 13, 1914.

4 SHEETS—SHEET 3.

Fig. 7.

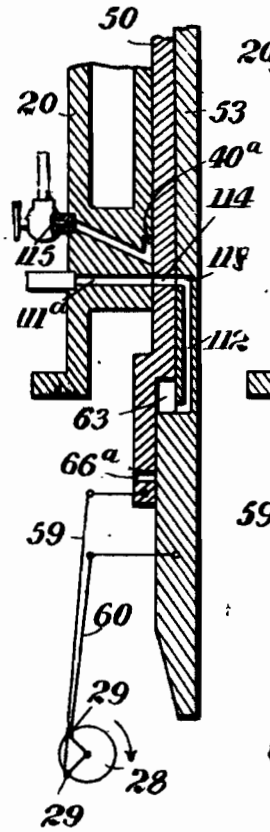

Fig. 8.

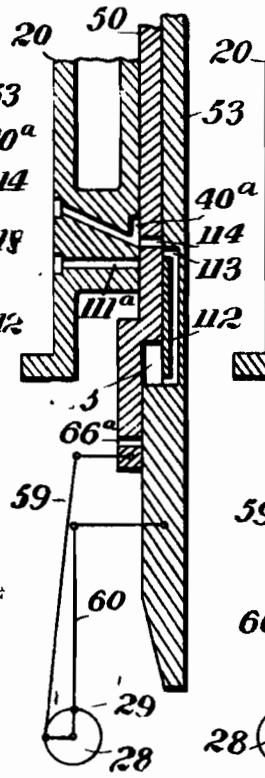

Fig. 9.

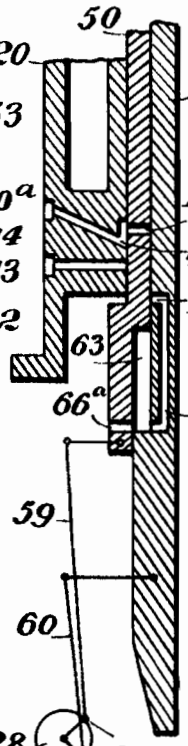

Fig. 10.

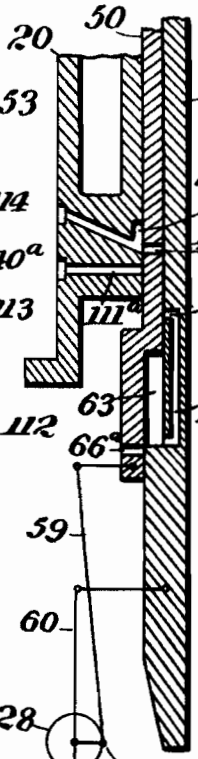

Fig. 11.

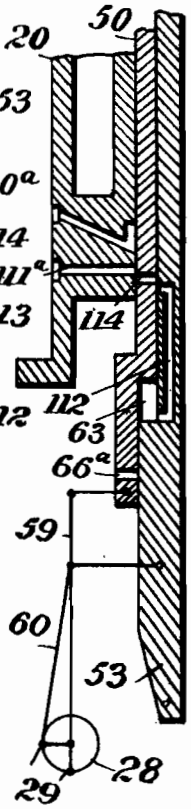

Fig. 6

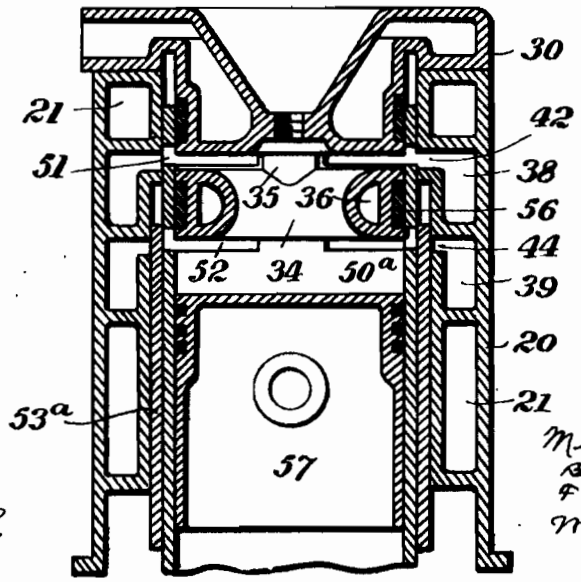

Witnesses

J. G. Stinkel

J. J. McCarthy

Inventor

Milton Tibbetts

By Foster, Freeman, Watson & Coit

Attorneys

M. TIBBETTS.

ENGINE.

APPLICATION FILED MAR. 18, 1909.

1,113,510. Patented Oct. 13, 1914.

4 SHEETS—SHEET 4.

Fig. 12.

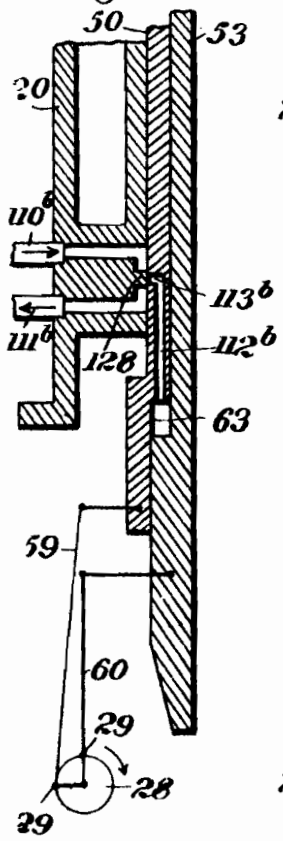

Fig. 13.

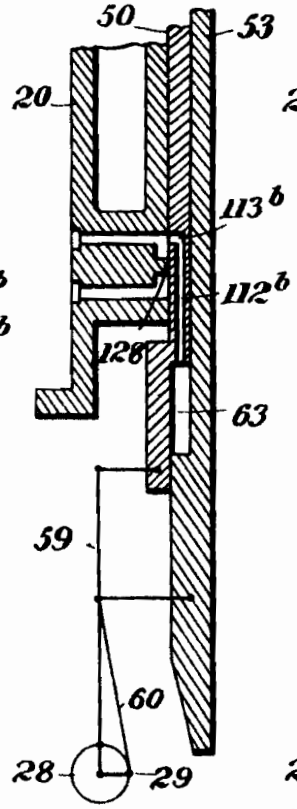

Fig. 14.

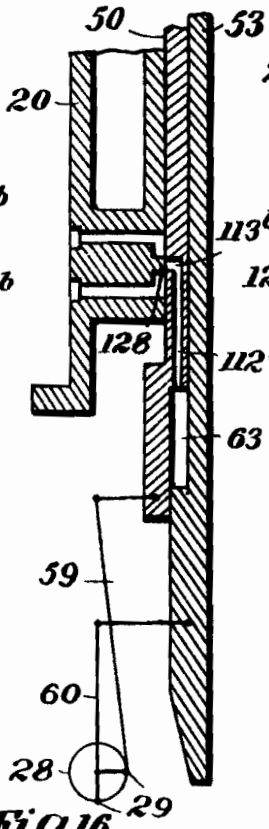

Fig. 15.

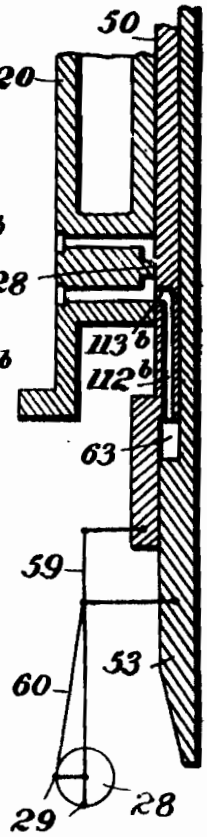

Fig. 16.

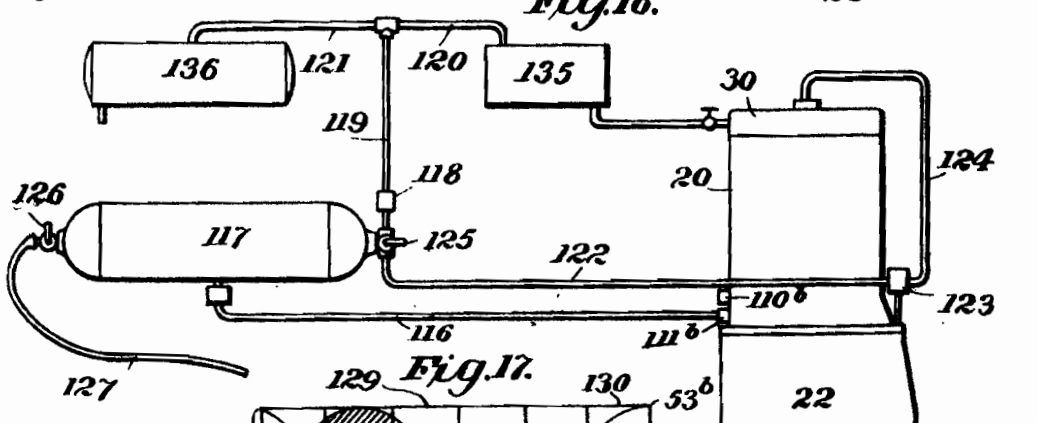

Fig. 17.

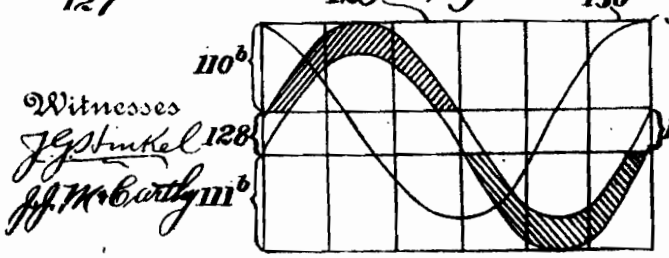

Witnesses

J. G. Stinkel

J. J. McCarthy

Inventor

Milton Tibbetts

by

Attorneys

UNITED STATES PATENT OFFICE.

MILTON TIBBETTS, OF DETROIT, MICHIGAN, ASSIGNOR TO PACKARD MOTOR CAR COMPANY, OF DETROIT, MICHIGAN, A CORPORATION OF MICHIGAN.

ENGINE.

1,113,510. Specification of Letters Patent. Patented Oct. 13, 1914.

Application filed March 18, 1909. Serial No. 484,231.

To all whom it may concern:

Be it known that I, MILTON TIBBETTS, a citizen of the United States, residing at Detroit, in the county of Wayne and State of Michigan, have invented certain new and useful Improvements in Engines, of which the following is a specification.

This invention relates to engines in the broadest sense, including motors of all kinds, compressors and blowing engines, pumps, and similar devices, and particularly to internal combustion motors employing sliding valves.

Engines have heretofore been constructed in which the inlet and outlet ports are arranged opposite each other and in approximately the same plane and in which a pair of sleeves surround the piston and have cooperating ports to open and close the cylinder ports, and it is improvements upon and additions to such motors that constitute the subject-matter of my present invention.

One of the objects of my invention is to obtain a larger, quicker and more positive opening and closing of the inlet and exhaust ports of the engine than has heretofore been accomplished.

Another object is to provide a simple and effective air compressing and oil pumping mechanism for the engine without materially increasing the working parts.

These and other objects will appear in the following description taken in connection with the drawings, in which,—

Figure 1 is a transverse sectional view through the center of the cylinder of an engine embodying some of the features of my invention; Fig. 2 is an enlarged vertical section on the line 2—2 of Fig. 1; Fig. 3 is a section similar to Fig. 1 showing an engine embodying another form of my invention; Fig. 4 is a section on the line 4—4 of Fig. 3; Fig. 5 is a fragmentary sectional view approximately on the line 5—5 of Fig. 4; Fig. 6 is a section similar to Figs. 1 and 3, showing an engine embodying another form of my invention; Figs. 7 to 11 are enlarged sectional views showing one form of the pumping mechanism with the moving parts in various positions; Figs. 12 to 15 are enlarged sectional views showing another form of the pumping mechanism with the moving parts in various positions; Fig. 16 is a diagrammatic view; and Fig. 17 is a diagram showing the opening and closing of the ports in the pump illustrated in Figs. 12 to 15.

Referring particularly to Figs. 1 and 2, 20 represents the casing or cylinder of the engine having double walls forming a water jacket 21. This casing is mounted on the upper or supporting section 22 of the crank case and the crank shaft 23 is mounted in bearings 24 between said section 22 and the removable intermediate section 25. The bottom of the crank case is closed by the removable cover 26 which forms an oil well into which the cranks 27 dip as they revolve thus lubricating by the splash system the various working parts within the crank case. Also mounted to rotate in the supporting section 22 parallel with the crank shaft is a valve operating shaft 28 having eccentrics or cranks 29 for reciprocating the valves hereinafter described. This shaft 28 is driven by the crank shaft by two-to-one gearing such as illustrated in Fig. 3, whereby the motor is operated on the four stroke cycle.

The upper end of the casing or cylinder 20 is closed by a removable end wall or head 30, the cylindrical shaped central part 31 of which extends down into the casing as shown, leaving an annular space 32 between its periphery and the inner wall of the casing. This head is also water jacketed as shown, its water jacket being connected with the jacket 21 of the cylinder and it is formed with horizontal ports 33, which nearly divide it, the lower part 34 being suspended only by the hollow arms 35 through which the water passes to the jacket 36. Said lower part 34 is in the form of a hollow ring with the ports 33 along its upper edge and thus these ports are in constant communication with the interior of the casing or cylinder 20. A spark plug 37 is provided in the central part of the head for igniting the charge in the cylinder as is well understood.

The casing or cylinder 20 is formed with inlet and exhaust chambers 38 and 39, which extend parallel with each other entirely around the casing, being separated by a thin partition 40. The inlet chamber 38 communicates with the inlet pipe 41 and with the ports 42 in the casing wall, which ports 42 are arranged approximately in a plane with the ports 33 in the head above de-

scribed, and the exhaust chamber 39 communicates with the exhaust pipe 43 and with the ports 44 in the casing wall, which ports 44 extend practically around the cylinder and are arranged just below the lower edge of the part 34 of the head above described.

It will be understood that with the above arrangement of chambers and ports the total area of the ports will be greater than in engines employing opposite inlet and outlet ports where each port extends less than half way around the cylinder, and when the engine is used as an explosive motor the hot exhaust gases passing through the exhaust chamber will tend to warm the gases entering the inlet chamber.

Guided by the inner wall of the casing 20 and extending into the annular space 32 is a sliding valve shown in the form of a cylindrical sleeve 50 having two sets of ports 51 and 52, each of which sets extends entirely around the sleeve, the sections above and below the ports being connected by webs. The ports 51 are adapted to register with the inlet ports 42 and consequently with the ports 33 in the head 30, and the ports 52 are adapted to register with the exhaust ports 44. Sliding within the sleeve 50 and also extending into the space 32 is another similar sleeve or sliding valve 53 which has similar sets of ports 54 and 55 which also extend entirely around the sleeve and are adapted to respectively register at times with the ports 42 and 44 and with the ports 51 and 52. The periphery of the central part 31 of the head 30 is provided with split packing rings 56 above and below the ports 33 whereby the ports 54 and 55 are made tight when said ports are over these rings which is preferably during the compression and firing strokes of the motor.

The sleeve 53 above described forms the piston barrel, the piston 57 being shown therein and connected to the crank shaft by the connecting rod 58.

The sleeves 50 and 53 are reciprocated by the cranks 29 on the shaft 28 through the rods 59 and 60 respectively, and said cranks 29 are arranged at approximately 90° apart with the inner sleeve connected to the leading crank whereby the outer sleeve follows the inner sleeve at a quarter period from it, and the various ports above described are so arranged and proportioned that the inlet port will be open to the interior of the inner sleeve or piston barrel and the exhaust port closed thereto during the suction stroke of the piston, both inlet and exhaust ports will be closed during the following compression and firing strokes of the piston, and the exhaust port open and the inlet closed during the following exhaust stroke, as is usual in four stroke cycle motors. With the sleeves so arranged about a quarter period apart it is evident that there will be a relative movement between the sleeves and they will be caused to recede from and approach toward each other once during each cycle of operation of the motor. It is also evident that the outer sleeve will reciprocate relative to the cylinder, and it is one of the objects of this invention to utilize one or both of these relative movements to pump oil to various parts of the motor or to pump air to a compression tank for various uses, or for other similar purposes.

The pump shown in Figs. 1 and 2 is formed in the two sleeves 50 and 53, the outer sleeve 53 having its bore enlarged at the lower end as shown at 61 and the inner sleeve 50 having an annular enlargement 62 adapted to operate in the enlarged bore 61. Thus it will be seen that the relative movement of the sleeves will cause the pump chamber 63 between the sleeves to be alternately enlarged and contracted so that by arranging suitable ports in the sleeves such relative movement may be utilized as a pump for various purposes. In said Figs. 1 and 2, the lower end of the outer sleeve is provided with an outwardly extending annular ledge 64, having a flange 65, which ledge is adapted to catch the oil splashed by the cranks 27 revolving in the crank case, and openings 66 communicate with the interior of the pump chamber 63 when the sleeves are farthest apart, whereby the oil caught by said ledge is drawn into the chamber, and as the sleeves then come together the oil is forced up through check valve 67 and passage 68 to a passage 69 formed between the sleeves as shown. Said passage 69 leads part of the oil upwardly to the top of the sleeve and part of it is led around the sleeve by distributing grooves 70 by which the sleeves are lubricated. If a superfluous amount of oil reaches the space 32 between the head and the casing it will flow by gravity or pressure from the pump through the overflow passage 71 formed between the outer sleeve and the inner wall of the casing. Thus, so long as there is a supply of oil in the crank case it will be splashed onto the ledge 64, pumped up through the various oil passages and fed to the distributing grooves 70, and the surplus finds its way down from the head through the overflow passage to the crank case again, or is caught immediately by the ledge and returned by the pump. Small openings 72 may be formed in the outer sleeve to aid in the lubrication of the cylinder wall. Thus a constant flow of oil is kept up and the sleeves and cylinder are amply lubricated.

It will be understood that the passages 69 and 71 reach the tops of the sleeves by being partly formed in webs between the va-

rious parts, these webs being preferably formed opposite the hollow arms 35 of the head.

Another form of two sleeve motor is illustrated in Figs. 3 to 5, the main difference between this form and the above described form being that the sleeves, instead of being superposed, are arranged end to end and each sleeve controls its separate port, the upper sleeve 100 moving up and down to open and close the inlet port 42, and the lower sleeve 101 moving down and up to open and close the exhaust port 44. The upper sleeve 100 is reciprocated by rods 102 which are connected to ears 103 on the sleeve and extend down through vertical guideways 104 into the crank case where their lower ends are connected by rods 105 with cranks or eccentrics 29 on the valve operating shafts 28. The lower sleeve 101 is connected through ears 106 and rods 107 with its respective cranks or eccentrics on the shafts 28 as will be clearly seen. In this form of the invention, I have shown two operating shafts 28, one on each side of the motor, and they are identical in construction and are rotated by two-to-one gearing from the crank shaft, such as large gears 108 and small gear 109. The use of two operating shafts guards against twisting or binding of the sleeves that might occur if only one shaft was used. Corresponding parts of the motor shown in Fig. 3 are lettered the same as those in the motor shown in Fig. 1. As there is but one sleeve in the lower end of the cylinder in Fig. 3, the oil pump is formed between the sleeve and cylinder, the cylinder bore being enlarged at 61ᵃ as shown and the lower end of the sleeve 101 being increased in size as at 62ᵃ, to fit said enlarged bore. In Fig. 5 the oil pump inlet is shown at 110 and the outlet at 111, and each of these may be in the form of a check valve like that illustrated at 67 in Fig. 1. The operation of the pump is obvious; the sleeve on the down stroke creating a vacuum in the chamber 63 which draws the oil through the inlet 110 as the sleeve reaches the bottom of its stroke, and the return or up stroke of the sleeve forcing this oil through the outlet 111 from which it may be led through pipes to any desired points. If desirable the inlet 110 may be arranged at the top of the chamber 63 instead of at the bottom as shown.

In Fig. 6 another form of the invention is shown in which two superposed sleeve valves are employed, the inner sleeve 50ᵃ being similar to the inner sleeve shown in Fig. 1, but the outer sleeve 53ᵃ is shorter than the inner and coöperates only in controlling the lower or exhaust ports, the inner sleeve alone controlling the inlet ports. Except as stated and as to a slight difference in the timing of the sleeves made necessary by their difference in construction, this motor is similar to those previously described and like parts are similarly designated.

Figs. 7 to 11 illustrate a form of oil or air pump differing slightly in its method of operation from those previously described, but applicable to any form of motor employing a plurality of superposed relatively sliding valves. This form of pump is particularly designed for pumping a very small quantity of oil at each stroke, but may of course be used in other ways by varying the size and capacity of the chambers and ports. A pump chamber 63 is formed between the sleeves 50 and 53 as in Fig. 1 and a port (or series of ports) 66ᵃ is formed in the outer sleeve in position to be open to the chamber 63 when the sleeves are at their maximum distance apart, whereby a charge of air from the crank case is drawn into the chamber. As the sleeves then approach each other the chamber 63 is of course contracted and the air therein compressed, its only outlet being through passage 112 suitably formed in the inner sleeve or between it and the outer sleeve. The outlet 113 of this passage is arranged to register with a port or pocket 114 extending entirely through the outer sleeve 50 at the same time that said pocket registers with the outlet port 111ᵃ formed in the cylinder wall, whereby the air compressed in said chamber rushes through said pocket and is discharged into said outlet port or pipe 111ᵃ. While the charge of air is being drawn into and compressed within the chamber 63 as above described, the port or pocket 114 is in register with the oil inlet port 40ᵃ, which port in this instance is elongated vertically so that the pocket may register with it for a considerable period of the stroke of the outer sleeve, and the oil in said port or pipe 40ᵃ flows by gravity or pressure into the pocket 114, so that when the charge of air rushes through said pocket as above set forth it carries with it the charge of oil therein contained and from the pipe 111ᵃ it is fed to the various points of the motor to be lubricated, or to an oil compression tank as desired. The quantity of oil to be fed at each charge may be regulated by varying the size of the pocket 114 or by the needle valve 115. The various positions of the sleeves shown in Figs. 7 to 11 amply illustrate the operation of the pump. It will of course be understood that the pocket 114 may be elongated upwardly instead of the port 40ᵃ and the same result would be accomplished.

In the form of pump illustrated in Figs. 12 to 17 there are no check valves and there is no communication with the crank case. The inlet port 110ᵇ and the outlet port 111ᵇ are arranged as shown, each being slightly elongated longitudinally of the cylinder, so that the port 113ᵇ of passage 112ᵇ leading from the pump chamber 63, registers

with the inlet 110[b] during the suction stroke of the pump and with the outlet 111[b] during the compression stroke of the pump. Thus a considerable charge of oil may be drawn into the pump and discharged through the port 111[b] and from thence led to any desired points, or the pump may be used to compress air and store it in a pressure tank, from whence it may be used for various purposes about the motor as illustrated in Fig. 16. Referring to said figure, 20 represents the motor casing, 110[b] the air inlet for the pump inside the motor, and 111[b] the air outlet. The compressed air is led by pipe 116 to the pressure tank 117, from which tank it may be piped as desired through reducing valve 118 and pipes 119, 120 and 121 to the oil and gasolene tanks 135 and 136, respectively, of the motor, whereby oil and gasolene may be fed under pressure. Also a pipe 122 may convey the air to a distributing valve 123 and through pipe 124 to the cylinder of the motor for starting the same. The three-way cock 125 controls admission of air to the pipes 119 and 122. Air may also be led from the tank 117 through cock 126 and flexible tube 127 to the tires of the vehicle when the engine is used in a motor vehicle. Other and various uses may be made of the pump and its appurtenances and the above are described merely as illustrating some of its more important features, and are not intended to limit its uses to those shown.

In Fig. 17 the relative positions of the various ports are clearly illustrated in a complete cycle of operation of the pump. The cylinder ports are shown at 110[b] and 111[b], the partition between them at 128, and the port in the outer sleeve at 113[b]. The path of travel of said port 113[b] is clearly shown and the path of travel of the inner sleeve is indicated by the line 55[b]. Thus it will be observed that the sleeves are farthest apart at about the point 129 which is just as the port 113[b] is passing out of register with the inlet port, and that the sleeves are closest together at about the point 130 which is just as said port is passing out of register with the outlet port. During the time the port 113[b] is passing over the partition 128 the pump slightly compresses its charge or creates a vacuum within it as the case may be.

It is evident that the ports and passages may be formed in the cylinder and sleeves in various ways and the invention is not limited to the specific forms shown. It is also evident that the chamber 63 may be formed in various ways other than that shown, and it need not extend entirely around the sleeves but may be formed in a part only of their circumference.

In multi-cylinder motors of the character above described, the sleeve pump of one cylinder may be connected to one class of distributing devices and the pump of another cylinder to another such class, or the sleeve pumps of all the cylinders may be connected to a single distributing system, as desired.

Having thus described my invention, what I claim is:

1. The combination with a casing having a head extending into one end thereof, said casing having inlet and outlet ports in different transverse planes and said head having a port coöperating with one of said casing ports to open said casing port to the interior of the casing, of a plurality of valves sliding between said casing and head and controlling the ports therein.

2. The combination with a casing having a head extending into one end thereof, said casing having inlet and outlet ports in different transverse planes and one of which is above the lower end of the extension on said head, of a plurality of coaxial sliding valves arranged between the extended part of said head and the surrounding casing and controlling said ports, and positive means for sliding said valves.

3. The combination with a casing having a head extending into one end thereof, said casing having inlet and outlet ports in different transverse planes, and said head having a port coöperating with one of said casing ports, of a plurality of coaxial sliding valves controlling all of said ports, and means for sliding said valves.

4. The combination with a casing having a head extending into one end thereof, said casing having inlet and outlet ports in different transverse planes and said head having a port coöperating with one of said casing ports, of a plurality of coaxial sliding valves controlling all of said ports, and positive means for sliding said valves.

5. The combination with a casing having a head extending into one end thereof, said casing having inlet and outlet ports in different transverse planes and said head having a port coöperating with one of said casing ports, of a plurality of coaxial sliding valves between the extended part of the head and the surrounding casing and controlling all of said ports, and means for sliding said valves.

6. The combination with a casing having a head extending into one end thereof, said casing having inlet and outlet ports in different transverse planes and said head having a port coöperating with one of said casing ports, of a plurality of coaxial sliding valves between the extended part of the head and the surrounding casing and controlling all of said ports, and positive means for sliding said valves.

7. In an engine, the combination with a casing and a piston, of a pair of superposed sleeve valves surrounding the piston, one of

said valves having a recess and the other having a projection arranged in said recess and coöperating with the latter to produce a pumping action by their relative movement.

8. In an engine, the combination with a cylinder and a relatively sliding valve, of a pump of which said valve forms a part, the ports of said pump being independent of the inlet and outlet ports of the engine.

9. In a motor having two valve sleeves sliding one on the other, a pump barrel formed in one of said sleeves, a piston formed in the other, and means for relatively reciprocating said sleeves.

10. In a motor having two valve sleeves sliding one on the other, a pump barrel formed in one of said sleeves, a piston formed in the other, said sleeves having inlet and outlet ports for said pump barrel, and means for relatively reciprocating said sleeves.

11. In a motor, the combination with the casing having ports, and the piston working in said casing, of a pair of sleeves between said piston and casing and controlling said ports, of a pump formed in the lower ends of said sleeves and operated by the relative movement thereof, said sleeves having passages leading from the pump chamber to various points on the surfaces of the sleeves, and means for relatively reciprocating said sleeves.

12. In a motor, the combination with a casing or cylinder having ports, a piston working in the casing, and a plurality of sliding valves controlling said ports, of a pump formed in said valves, and means for reciprocating said valves relative to the casing and to each other.

13. In a motor, the combination with the casing having ports, a plurality of sliding valves in the casing controlling said ports, a piston, connecting rod and crank shaft suitably connected, the piston working in the casing, means for sliding said valves, and a crank case including the working parts of the motor and adapted to contain oil for lubricating the said parts by the splash system, of means operated by said valves for forcing said oil between the valves.

14. In a motor, the combination with the casing having ports, a plurality of sliding valves in the casing controlling said ports, a piston, connecting rod and crank shaft suitably connected, the piston working in the casing, means for sliding said valves, and a crank case inclosing the working parts of the motor and adapted to contain oil for lubricating the said parts by the splash system, of means operated by said valves for forcing said oil between the valves and between one of the valves and the casing.

15. In a motor, the combination with the casing having ports, a plurality of sliding valves in the casing controlling said ports, a piston, connecting rod and crank shaft suitably connected, the piston working in the casing, means for sliding said valves, and a crank case inclosing the working parts of the motor and adapted to contain oil for lubricating the said parts by the splash system, of means operated by said valves for forcing said oil to the casing head, and means by which said oil may return from the head to the crank case.

16. In a motor, the combination with the casing having ports, a plurality of sliding valves in the casing controlling said ports, a piston, connecting rod and crank shaft suitably connected, the piston working in the casing, means for sliding said valves, and a crank case inclosing the working parts of the motor and adapted to contain oil for lubricating the said parts by the splash system, of a pump formed in said valves, and means for supplying the oil in the crank case to said pump.

17. In a motor, the combination with the casing having ports, a plurality of sliding valves in the casing controlling said ports, a piston, connecting rod and crank shaft suitably connected, the piston working in the casing, means for sliding the valves, and a crank case inclosing the working parts of the motor and adapted to contain oil for lubricating the said parts by the splash system, of a pump formed in said valves, means for supplying the oil in the crank case to said pump, and means for conveying the oil from the pump to various parts of the motor.

18. The combination with a stationary casing having inlet and outlet ports, of a pump cylinder movable relative to the casing and having an annular recess and a port adapted to register with the ports in said casing, a pump piston having an annular enlargement fitting said recess and movable relative to the cylinder and to the casing, and means for moving said cylinder and piston.

19. In a motor, the combination with the casing having intake and exhaust ports, the piston in the casing, and the superposed sliding sleeves controlling said ports, said casing having oil inlet and outlet ports and the outer of said sleeves having a pocket adapted to register with said inlet and outlet ports at different times, and means for sending a charge of air through said pocket at the time it registers with said outlet port.

20. In a motor, the combination with the casing having intake and exhaust ports, the piston in the casing, and the superposed sliding sleeves controlling said ports, said casing having oil inlet and outlet ports and the outer of said sleeves having a pocket adapted to register with said inlet and outlet ports at different times, and means oper-

ated by the sleeves for sending a charge of air through said pocket at the time it registers with said outlet port.

21. In a motor, the combination with the casing having intake and exhaust ports, the piston in the casing, and the superposed sliding sleeves controlling said ports, said casing having oil inlet and outlet ports and the outer of said sleeves having a pocket adapted to register with said inlet and outlet ports at different times, and a pump formed in said sleeves adapted to send a charge of air through said pocket at the time it registers with said outlet port.

22. In a motor, the combination with the casing having intake and exhaust ports, the piston in the casing, and the superposed sliding sleeves controlling said ports, said casing having oil inlet and outlet ports and the outer of said sleeves having a pocket adapted to register with said inlet and outlet ports at different times, said inner sleeve also having an enlarged bore at its lower end and said outer sleeve being enlarged to fit said bore, whereby a chamber is formed between the sleeves which expands and contracts as the sleeves are relatively reciprocated, and said outer sleeve having a passage extending from said chamber and adapted to register with said pocket at the same time said pocket registers with said outlet port.

23. In a motor, the combination with the casing having intake and exhaust ports, the piston therein, and the two superposed sleeves controlling said ports, said casing having air inlet and outlet ports arranged in different transverse planes and the outer of said sleeves having a port adapted to register with said air ports at different times, a pump formed in said sleeves and communicating with the port in said outer sleeve, and means for reciprocating said sleeves relative to the casing and to each other.

24. The combination with a motor comprising a casing, a piston therein, and a pair of relatively movable valve sleeves controlling the ports of the motor, of a pump formed in the ends of said sleeves, and a compression tank having pipe communication with said pump.

25. The combination with a casing having inlet and outlet ports in different transverse planes, a relatively immovable end wall in said casing, and having a port cooperating with one of the ports in said casing and a piston working in the casing, of a plurality of concentric sleeves or sliding valves controlling said ports, and positively operating means for sliding said valves.

26. The combination with a casing having inlet and outlet ports in different transverse planes, a relatively immovable end wall in said casing, and having a port cooperating with one of the ports in said casing and a piston working in the casing entirely beyond said port, of a plurality of concentric sleeves or sliding valves controlling said ports, and positively operating means for sliding said valves.

27. The combination with a motor having a sliding valve, of a pump of which said valve forms the piston, the ports of said motor and pump being independent.

28. In an engine, the combination with a cylinder and a relatively sliding valve, of a pump of which said valve forms a part, the ports of said pump being independent of the ports of the engine.

29. In a motor having two valve sleeves sliding one on the other, a pump barrel formed in one of said sleeves, a piston formed in the other sleeve, said sleeves having ducts formed in them to connect with the pump outlet, and means for relatively reciprocating said sleeve.

30. In a hydrocarbon motor having valve sleeves sliding one on the other between the piston and the cylinder, a pump barrel formed in one of said sleeves, a piston formed in the other sleeve, and means for relatively reciprocating said sleeves.

31. In a hydrocarbon motor having valve sleeves sliding one on the other between the piston and the cylinder, a pump barrel formed in one of said sleeves, a piston formed in the other sleeve said sleeves having inlet and outlet ports for said pump, and means for relatively reciprocating said sleeves.

In testimony whereof I affix my signature in presence of two witnesses.

MILTON TIBBETTS.

Witnesses:
ARTHUR L. BRYANT,
M. G. CRANDELL.

Corrections in Letters Patent No. 1,113,510.

It is hereby certified that in Letters Patent No. 1,113,510, granted October 13, 1914, upon the application of Milton Tibbetts, of Detroit, Michigan, for an improvement in "Engines," errors appear in the printed specification requiring correction as follows: Page 5, line 47, for the word "including" read *inclosing;* page 6, line 77, before the word "valve" insert the word *sleeve;* and that the said Letters Patent should be read with these corrections therein that the same may conform to the record of the case in the Patent Office.

Signed and sealed this 17th day of November, A. D., 1914.

[SEAL.] R. F. WHITEHEAD,

Acting Commissioner of Patents.

R. HUFF.

HYDROCARBON MOTOR.

APPLICATION FILED MAR. 20, 1909.

1,080,761.

Patented Dec. 9, 1913.

2 SHEETS—SHEET 1.

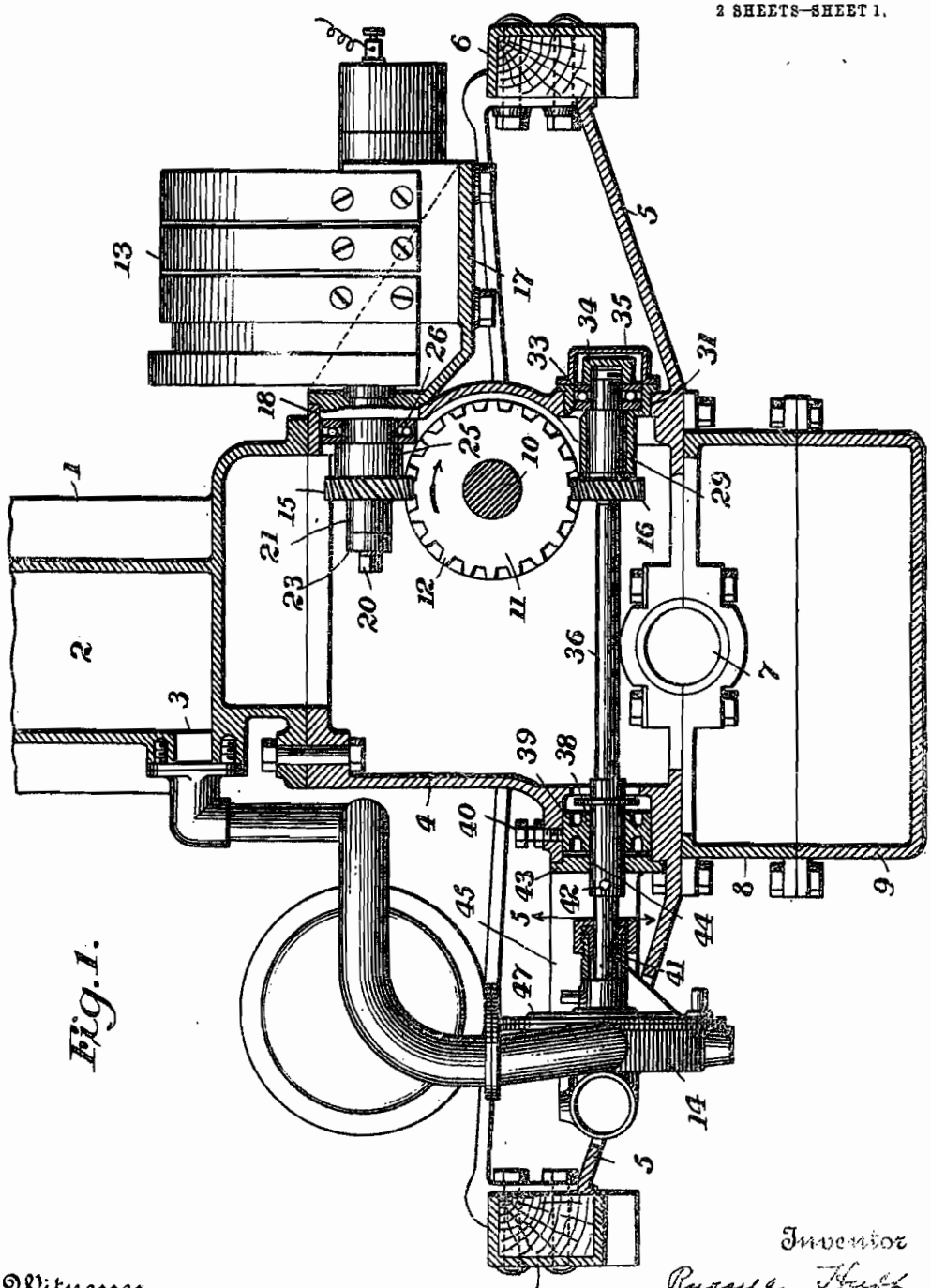

Fig. 1.

Witnesses

J. G. Stinkel

J. J. McCarthy

Inventor

Russell Huff

By

Foster, Freeman, Watson & Coit

Attorneys

R. HUFF.

HYDROCARBON MOTOR.

APPLICATION FILED MAR. 20, 1909.

1,080,761.

Patented Dec. 9, 1913.

2 SHEETS—SHEET 2.

Fig. 3.

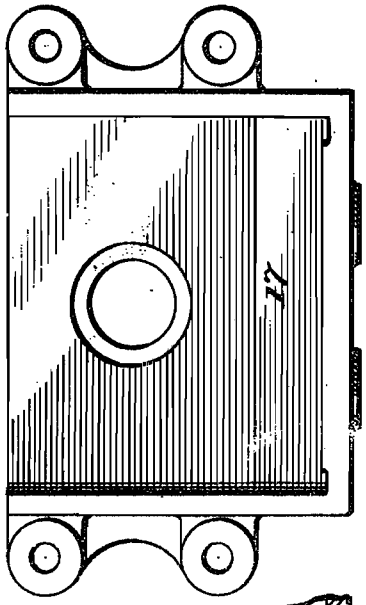

Fig. 5.

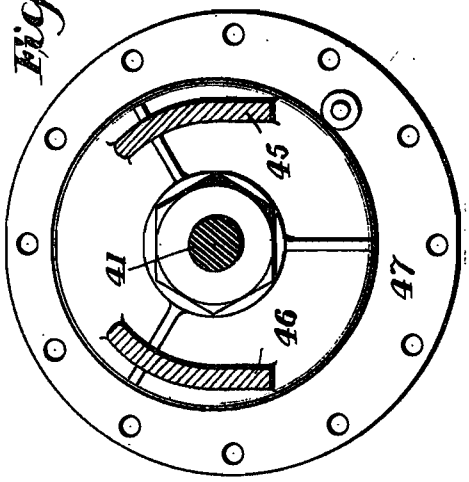

Fig. 2.

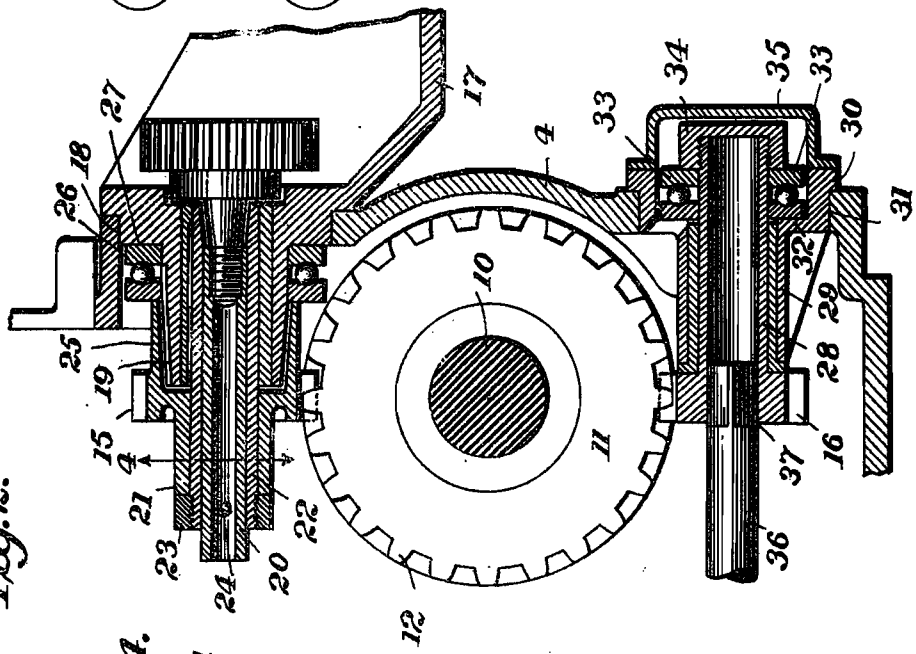

Fig. 4.

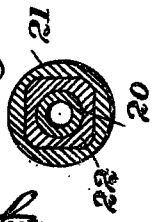

Witnesses

J. G. Sinkel

J. J. McCarthy

Inventor

Russell Huff

By

Foster, Freeman, Watson & Coit

Attorneys

UNITED STATES PATENT OFFICE.

RUSSELL HUFF, OF DETROIT, MICHIGAN, ASSIGNOR, BY MESNE ASSIGNMENTS, TO PACKARD MOTOR CAR COMPANY, OF DETROIT, MICHIGAN, A CORPORATION OF MICHIGAN.

HYDROCARBON-MOTOR.

1,080,761. Specification of Letters Patent. Patented Dec. 9, 1913.

Application filed March 20, 1909. Serial No. 484,833.

To all whom it may concern:

Be it known that I, RUSSELL HUFF, a citizen of the United States, and resident of Detroit, in the county of Wayne and State of Michigan, have invented certain new and useful Improvements in Hydrocarbon-Motors, of which the following is a specification.

My invention relates to motor vehicles and particularly to the construction and arrangement of the motor in such vehicles.

In one embodiment of my invention I have shown an internal combustion motor of the water cooled variety mounted low in the vehicle frame, a low hung motor being desirable to lower the center of gravity and for other well known reasons. In motor vehicles, also, the width of the frame at the sides of the motor is limited by well established designs and it is therefore necessary that all the operating parts of the motor shall be contained within a very limited compass. In most water cooled motor vehicles the radiator for cooling the circulating water is placed as low as possible on the frame adjacent the motor, and where a centrifugal pump is employed to maintain the circulation it is necessary that it shall be placed low also to keep it primed and to get the best results. This pump is of course driven by the motor and constitutes one of several auxiliary devices which the motor drives in its normal operation and in practice it is found desirable to drive such pump at slightly greater than crank shaft speed. Another of such auxiliary devices is a magneto or generator and it is desirable that this shall be placed conveniently for inspection and adjustment. If a magneto is employed it is also necessary that it shall be driven at the same speed as the crank shaft of the motor. As a magneto or generator is also liable to be short-circuited by water, it is desirable to carry it high so that in fording streams with the vehicle it will not be so liable to injury from this cause.

For the above reasons, it will be seen to be impracticable to secure the results above indicated by driving the pump and magneto from the same shaft, and while this might be in some other respects desirable, it is found to be more advantageous to operate each of these auxiliary devices on a separately driven shaft. In my present invention, I have shown the shafts of these devices driven by the same driving gear although the pump is at one side of the motor and placed in low relation thereto and the magneto is at the other side and located at a convenient and accessible position above the frame of the vehicle.

Various advantages accrue in consequence of the construction and arrangement of my motor, and these will appear in the following detail description.

In the drawings: Figure 1 is a part sectional view on a transverse vertical plane between two cylinders of a motor vehicle embodying my invention, showing the water jacket in section; Fig. 2 is an enlarged sectional view of the driving gear on the valve shaft and the connected driven shafts and bearings; Fig. 3 is an end view of the bracket for supporting the magneto; Fig. 4 is a section taken on the line 4—4 of Fig. 2; and Fig. 5 is a section taken on the line 5—5 of Fig. 1.

1 represents one of the cylinders of a multi-cylinder motor, the cylinders being cast in pairs so that the water jacket 2 is common to both cylinders of a pair for a certain distance between the cylinders as is usual in such motors. The water inlet to the jacket 2 is shown at 3. The cylinders 1 are bolted to the top of the supporting section 4 of the crank case, which section has laterally extending arms 5 with ends resting on and bolted to the side members of the vehicle frame 6. These arms and side members of the frame constitute side supports for the crank case and motor. The crank shaft bearings 7 are shown suspended between the section 4 and the intermediate section 8 of the crank case, the crank shaft, connecting rods and piston being omitted in Fig. 1 for clearness. The bottom of the crank case is closed by the cover 9 which forms an oil well for splash lubrication as is understood.

Mounted in suitable bearings in the supporting section 4 is a valve operating shaft 10 which is geared by two-to-one gears to the crank shaft 7, one of these gears being shown at 11. By this means the valve shaft is driven by the crank shaft at one-half the speed thereof, whereby the valves are operated as in the usual four stroke cycle motor. This shaft 10 is parallel to the crank shaft 7 and as shown is arranged at one side of the crank case. The gear 11 has on its

surface the spiral teeth 12 which are adapted to engage similar spiral teeth on the transversely arranged gears for operating the magneto 13 and pump 14. The gear 15 for the magneto is of such size and the parts are so proportioned that the shaft of the magneto will be driven at twice the speed of the shaft 10, and thus at the same speed as the crank shaft 7. The gear 16 for driving the pump is preferably made smaller than the gear 15 so that the shaft of the pump will be driven at a greater speed than the magneto shaft and crank shaft. As above indicated, this greater speed for the pump is desirable in order to create a proper circulation of water around the cylinders.

It will be observed that the magneto 13 is placed above the side supports 5 and side bars of the frame 6 so that it will be in convenient position for operation and so that access may be had to it easily. This magneto is supported on a bracket 17 which is bolted or otherwise securely fastened to the supporting section 4 of the crank case at the opening 18 formed in that case. This bracket is provided with an extended sleeve 19 projecting within the opening 18 and constituting a bearing surrounding the shaft 20 of the magneto. The gear 15 is formed integral with or secured to a short shaft 21 having the bearing sleeve 22 extending within the sleeve 19 and between it and the shaft 20, this sleeve 22 having the outer squared end fitting within the shaft 21 so as to rotate therewith, and having a screw-threaded end adapted to receive the nut 23 for holding the parts together. The sleeve 22 is secured to the shaft 20 by any suitable means such as the pin 24. The shaft 21 has an annular flange 25 surrounding the sleeve 19 and engaging the thrust bearing 26 which is placed against a shoulder 27 of the bracket 17. By this means the end thrust caused by the engagement of the spiral teeth on the gears 11 and 15 is taken up by the bracket 17 through the thrust bearing 26, and is not transmitted to the magneto. The magneto furthermore being carried on the horizontal platform of the bracket 17 has a fixed and definite relation to the bearing formed in the sleeve 19 of that bracket, and therefore the parts may be so adjusted that the shaft of the magneto will accurately fit in the bearing and it is not necessary to have adjustable means fo coupling the shaft of the magneto to the shaft which drives it. The driving connection for the shaft of the magneto being made through the squared end of the sleeve 22 permits longitudinal adjustment of the magneto to proper position and there is no end thrust on this connection.

The gear 16 for driving the pump is formed with or carried by a short shaft 28 which is mounted to turn in an elongated sleeve 29 of a bracket 30, which bracket is placed in an opening 31 in the supporting section 4 of the crank case, and is secured to that case by any suitable means such as bolts. The sleeve 29 is formed with a shoulder 32, facing outwardly near its end, and a thrust bearing 33 fits against this shoulder and is engaged on the outer side by a cap 34 carried by the outer end of the shaft 28, and thus the end thrust on the shaft 28 caused by the engagement of the inclined or spiral teeth on the gears 11 and 16 is taken up by the bracket 30 through the thrust bearings 33. A cap or cover 35 is placed over the exposed outer end of the shaft 28 and the thrust bearing. It will be observed that the driving gear 16 for the pump is low in the crank case, and is opposite the side supports 5 and 6, and that the pump 14 is on the opposite side of the crank case between the side member 6 and that case. The pump is thus not only in convenient position out of the way, but is so low that it will be kept primed by gravity. Since the pump is so far removed from the driving shaft 10 and since it is placed down opposite the side supports it is necessary to have a driving shaft of peculiar construction which will enable it to be easily removed from the machine. It is impossible to have a single long driving shaft adapted to be removed only by drawing it from the case longitudinally, since the side support is in the way. As shown in the drawing, I use a shaft 36 extending across the supporting section 4 of the crank case and having a squared or angular shaped end 37 fitting within a similarly shaped socket in the end of the shaft 28, thus forming a slidable driving connection which is sufficiently loose to permit the shaft 36 to bend slightly in relation to the shaft 28, thus furnishing practically a universal joint between the parts. The opposite end of this shaft 36 is mounted in a bearing 38 held in an opening 39 by screw 40. The shaft 41 of the pump fits in a socket formed in the end of the shaft 36 and the parts are secured so that they will rotate together by any suitable means, such as pin 42.

The pump 14 is of the rotary type and is carried on a bracket 43 secured to the section 4 over the opening 39 by any suitable means such as bolts. The end of this bracket has an opening 44 for the passage of the shaft 36. The bracket also has the side webs 45, 46 on opposite sides of the shaft 41, and these webs are preferably formed integral with the cover 47 of the pump. It will be observed that this form of bracket facilitates centering the pump in line with its drive shaft 36 and furnishes simple and efficient means for properly supporting it in position. The gear 16 for driving the pump is preferably made of less size than the gear 15 on the magneto shaft so that the pump will be driven at a greater speed than the

crank shaft and it will be clear that it can be driven at any speed desired by using a gear of proper size.

It is believed that the operation and advantages of the device will be apparent to those skilled in the art from the above description.

It will also be understood that the various features of my invention are not confined to the particular form and arrangement shown and are applicable to other uses.

Having thus described the invention, what is claimed is:

1. In a motor, the combination with the crank case provided with a shaft opening in one side, of a bracket secured to said case having a sleeve fitting in said shaft opening and adapted to support a magneto.

2. In a motor, the combination with the crank case provided with a shaft opening in one side, of a bracket secured to said case having a sleeve fitting in said shaft opening, a magneto carried by said bracket, and a shaft for said magneto having a bearing in said sleeve.

3. In a motor, the combination with the crank case provided with a shaft opening in one side, of a bracket secured to said case adjacent said opening, a magneto carried by said bracket, and a shaft for said magneto having a bearing in said opening.

4. In a motor, the combination with the crank case provided with a shaft opening in one side, of a bracket secured to said case having a sleeve fitting in said shaft opening and adapted to support operating mechanism, and a shaft for operating said mechanism having a bearing in said sleeve.

5. In a motor, the combination with the crank case provided with a shaft opening in one side, of a bracket secured to said case having a sleeve fitting in said shaft opening and adapted to support operating mechanism, a shaft for operating said mechanism having a bearing in said sleeve, and an end thrust bearing on said shaft engaging said sleeve.

6. In a motor, the combination with the crank case provided with a shaft opening in one side, of a bracket secured to said case having a sleeve fitting in said shaft opening and adapted to support operating mechanism, a shaft for operating said mechanism having a bearing in said sleeve, an end thrust bearing on said shaft engaging said sleeve, a spiral gear on said shaft within the gear case, and an intermeshing gear for driving said shaft.

7. In a water-cooled hydrocarbon motor, the combination with the crank shaft and the valve shaft driven therefrom and mounted parallel therewith, of a spiral driving gear on said valve shaft, a magneto geared to the top of said driving gear and a water pump for the circulation system geared to the bottom of said driving gear.

8. In a motor, the combination with the crank shaft and the valve shaft driven therefrom and mounted at one side of and parallel therewith, of a transverse shaft mounted adjacent said valve shaft and geared thereto, an auxiliary device mounted on the opposite side of the motor from said valve shaft and having an elongated driving shaft extending across the motor, and a driving connection between the end of said elongated shaft and said transverse shaft permitting a slight universal movement between said shafts.

9. In a water-cooled hydrocarbon motor, the combination with the crank shaft and the valve shaft driven therefrom and mounted parallel therewith, of a spiral driving-gear on said valve shaft, a magneto shaft extending transversely of the motor, a gear on said magneto shaft engaging the top of said driving-gear, a pump shaft extending transversely of the motor below said valve shaft, and a gear on said pump shaft engaging the bottom of said driving-gear.

In testimony whereof I affix my signature in presence of two witnesses.

RUSSELL HUFF.

Witnesses:

I. HARDING,

E. H. KING.

R. HUFF.

SINGLE LEVER GEAR SHIFTING MECHANISM.

APPLICATION FILED MAY 6, 1909.

1,122,118. Patented Dec. 22, 1914.

3 SHEETS—SHEET 1.

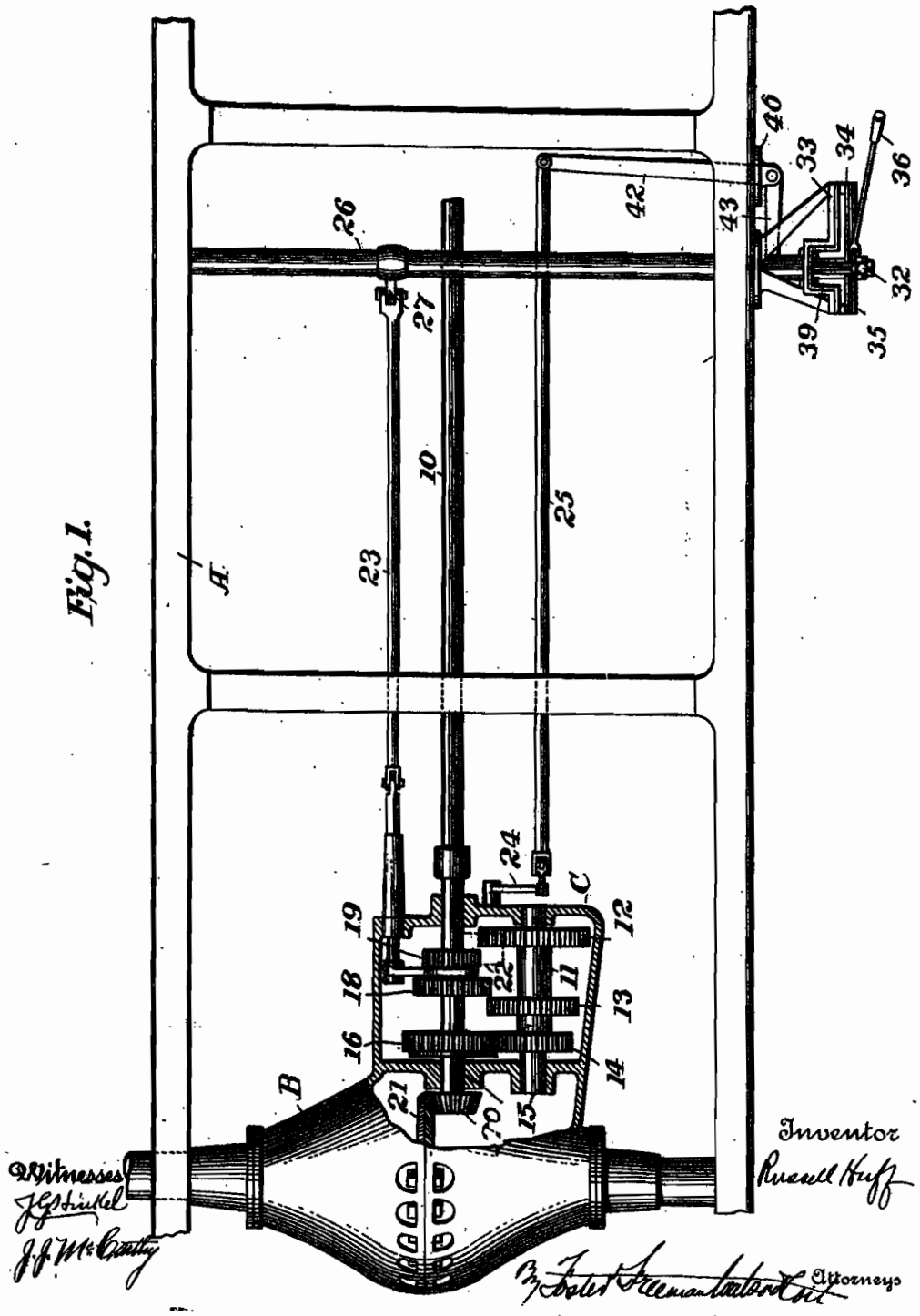

R. HUFF.

SINGLE LEVER GEAR SHIFTING MECHANISM.

APPLICATION FILED MAY 6, 1909.

1,122,118. Patented Dec. 22, 1914.

3 SHEETS—SHEET 2.

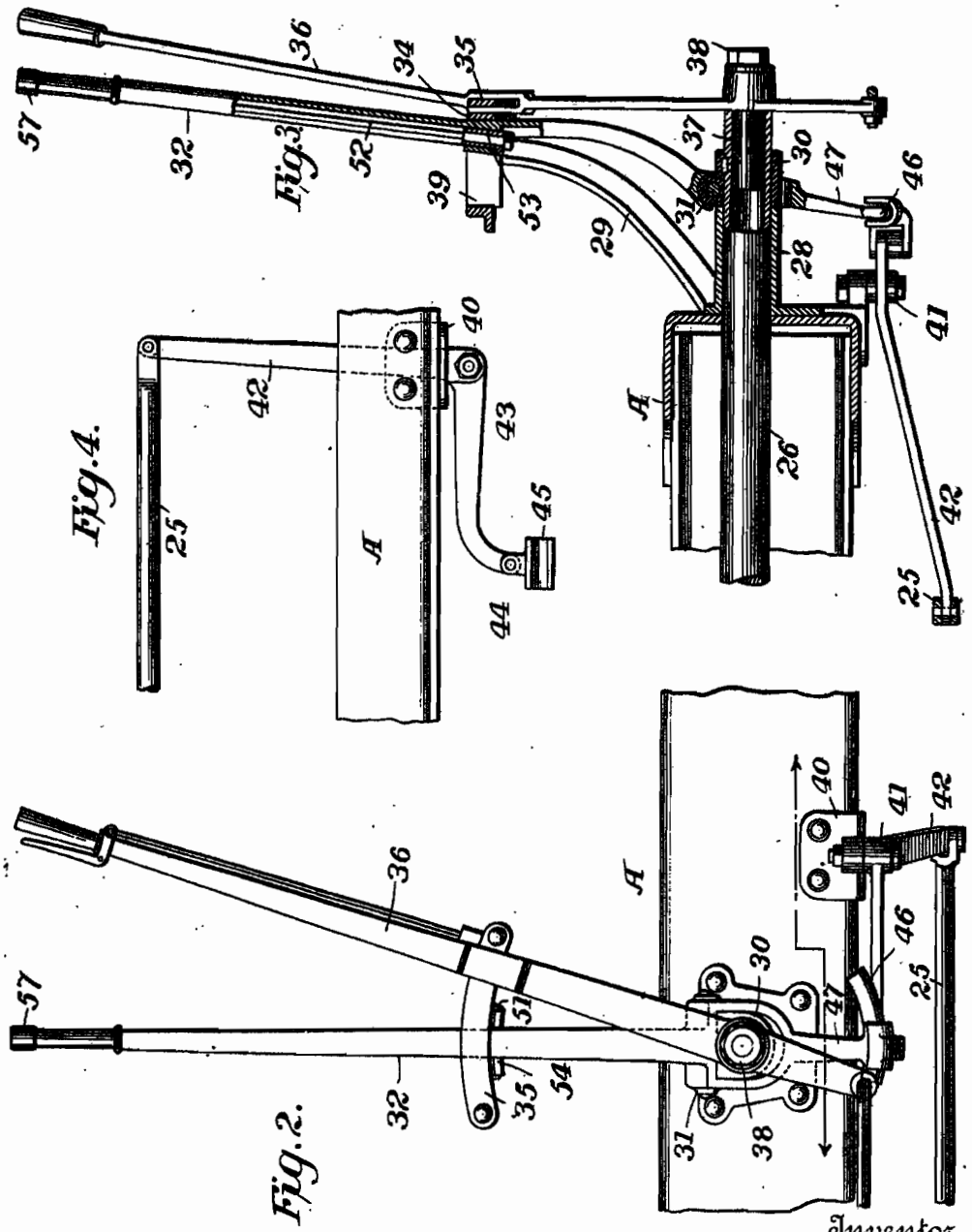

Witnesses

J. G. Stinkel

J. J. McCarthy

Inventor

Russell Huff

By Foster Freeman Watson & Coit

Attorneys

R. HUFF.

SINGLE LEVER GEAR SHIFTING MECHANISM.

APPLICATION FILED MAY 6, 1909.

1,122,118. Patented Dec. 22, 1914.

3 SHEETS—SHEET 3.

Fig. 6.

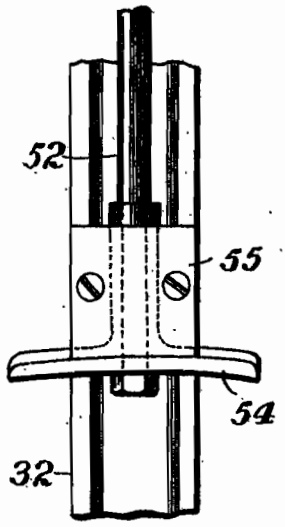

Fig. 5.

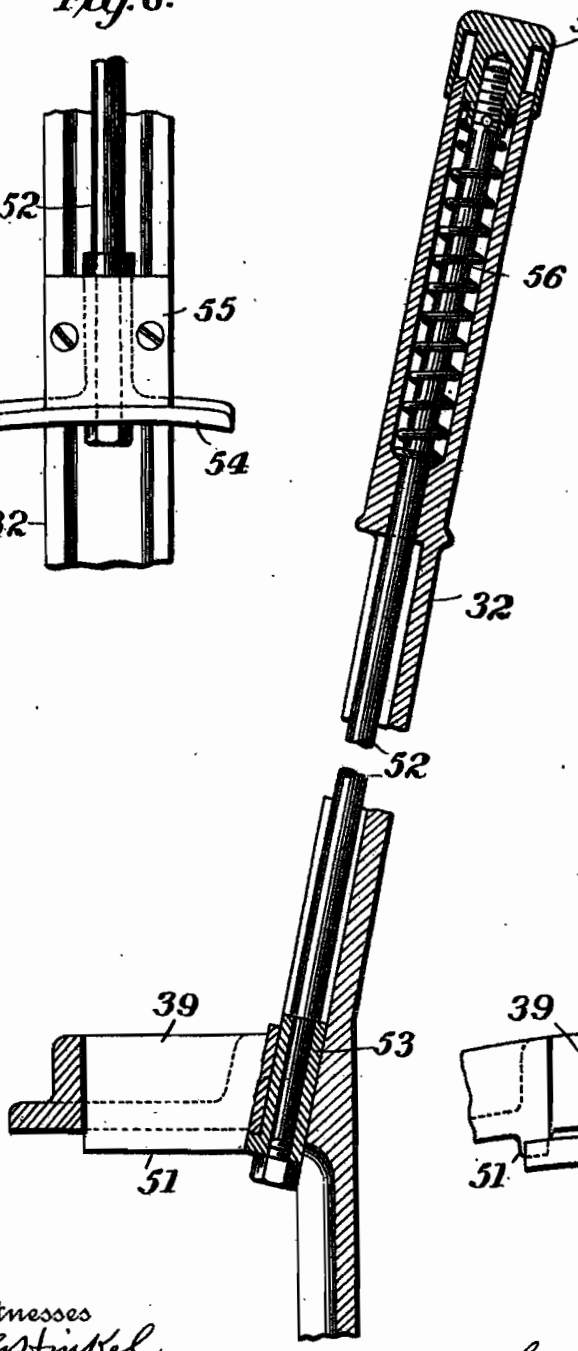

Fig. 7.

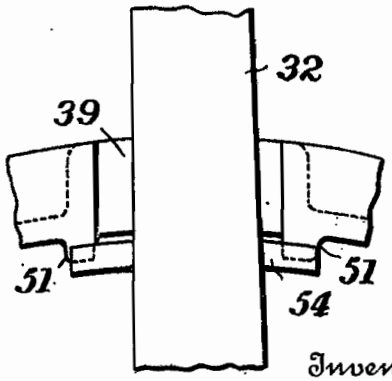

Witnesses
J. G. Stinkel
J. J. McCarthy

Inventor
Russell Huff
By Foster Freeman Watson & Coit
Attorneys

UNITED STATES PATENT OFFICE.

RUSSELL HUFF, OF DETROIT, MICHIGAN, ASSIGNOR, BY MESNE ASSIGNMENTS, TO PACKARD MOTOR CAR COMPANY, OF DETROIT, MICHIGAN, A CORPORATION OF MICHIGAN.

SINGLE-LEVER GEAR-SHIFTING MECHANISM.

1,122,118. Specification of Letters Patent. Patented Dec. 22, 1914.

Application filed May 6, 1909. Serial No. 494,455.

To all whom it may concern:

Be it known that I, RUSSELL HUFF, a citizen of the United States, and resident of Detroit, Wayne county, Michigan, have invented certain new and useful Improvements in Single-Lever Gear-Shifting Mechanism, of which the following is a specification.

This invention relates to gear-shifting mechanism and in particular to gear-shifting mechanism of the type in which by the operation of a single lever the gears may be shifted to obtain three forward speeds and a reverse.

The objects of this invention are to improve the construction of the operating mechanism, to prevent movement of the operating lever to reversing position except when desired, and to improve the construction in general.

The hand-lever is connected to a shaft which is mounted in bearing lugs in the frame and the shaft is connected by proper link mechanism to the change speed mechanism to shift the gears to different positions. The hand-lever moves along a guide or sector back and forth for changes in forward speeds. The side of the guide or sector nearest the operator is provided with a recess in which the hand-lever is moved for reversing. A brake-lever is mounted on a stud on the end of the shaft and has a guide located outside of the hand-lever guide. By so mounting and constructing the hand and brake lever guides the hand-lever when moved to reversing position is moved away from the brake-lever and thus all interference between the two levers is prevented. In order to bring about such a construction the reverse gear must be connected to the hand-lever through a bell-crank lever.

In the construction of a hand-lever guide of the above type in which the hand-lever moves into a recess in the guide when moved to reversing position, there is danger that it may be moved into the recess when not desired. Therefore this invention provides means for normally preventing transverse movement of the hand-lever into the recess to reversing position. This means consists of a bridging device connected to the hand-lever which is adapted to bridge the recess, and a button is provided on the hand-lever by the depression of which it may be thrown out of operative position and allow transverse movement of the lever.

In the drawings: Figure 1 is a plan view of the vehicle frame showing the change speed and reverse gears and the hand-lever for operating the same; Fig. 2 is a side elevation of the hand and brake levers and their guides; Fig. 3 is a transverse section along the shaft; Fig. 4 is a detail plan view of the bell-crank lever connection between the hand-lever and the reversing gear; Fig. 5 is a section through the hand-lever and the guide; Fig. 6 is a side elevation of the hand-lever showing the bridging device; and Fig. 7 is an elevation of the other side of the lever showing the guide also.

Referring to the drawings, A designates the frame of the vehicle, B the axle and differential casing, and C the gear casing.

The main driving shaft 10 extends from the motor into the gear casing. A countershaft 11 has rigidly connected to it gears 12, 13 and 14. Upon a shaft 15 is mounted a gear 16 which meshes with gear 14. A sliding sleeve provided with gears 18, 19 is splined on the driving shaft 10 and is adapted to coöperate with gears 12, 13 and 16 to obtain the three speeds forward. Upon the shaft 15 is mounted a bevel pinion 20 which meshes with a bevel gear 21 on the differential housing. A wide gear 22 mounted upon a rock-shaft in the usual way is constructed to be thrown into mesh with gears 12 and 19 when in the position shown in Fig. 1 to obtain the reverse movement. Gear 22 is constructed to be thrown to operative and inoperative position by means of an arm 24 connected to a link 25. The sliding gears 18, 19 are operated by means of a fork connected to a link 23 which is attached to an arm 27 on the hollow shaft 26.

The construction described so far is well-known.

The shaft 26 extends across the vehicle frame and is mounted in a bearing on the left side of the frame and extends through a bearing sleeve or lug 28 upon a bracket 29 which is secured to the vehicle frame. A sleeve 30 is rigidly connected to the shaft 26, which as shown is hollow, and upon this sleeve is pivoted at 31 the hand-lever 32. Integral with or otherwise secured to the bracket 29 is a side member 33, and spaced therefrom the side member 34, the members

33 and 34 forming the sector or guide for the hand-lever 32. A spaced member 35 is also secured to the bracket 29 and forms a guide for the brake-lever 36, which is mounted upon a stud 37 having its shank brazed in the hollow shaft 26. A nut 38 on the stud secures the brake-lever in place. The side member 33 is provided with a deep recess 39 into which the hand-lever 32 may be swung for a purpose to be hereafter described.

Upon the bracket 40 secured to the side member of the frame A is pivotally mounted a bell-crank lever 41 having one of its arms 42 pivotally connected to the link 25. The other arm 43 has pivotally mounted upon it a link member 44 provided with a slideway 45. A slide 46 in the form of an arc is attached to an extension 47 of the hand-lever 32. This slide coöperates with and slides within the slideway 45, as shown in Figs. 2 and 3.

In order to shift the gears for different speeds forward, the hand-lever is moved back and forth between the guide members 33 and 34. The hand-lever being secured to the sleeve 30 by means of the pivot pin 31, which sleeve is rigidly connected to the shaft 26, transmits this back and forth movement to the shaft and through the arm 27 thereon to the link 23 and gears 18 and 19. During this movement the slide 46 will slide in its slideway 45 a d no motion will be transmitted to the bell-crank lever 41. In order to throw into operation the reverse gear 22 the hand-lever 32 is moved opposite the recess 39 and moved inwardly away from the brake-lever. The hand-lever in this movement swings about pin 31 and through bell-crank lever 41 and link 25, moves the reverse gear 22 into operative position. It will be seen that during this movement the sleeve 30 remains stationary and therefore no movement is transmitted to the shaft 26. The position of the lever in the guide before it moves into the recess 39, that is when it is in the position shown in Fig. 3, corresponds to the neutral position.

In the construction so far described there is danger that the hand-lever 32 will be moved into the recess 39 when not desired. Therefore in order to prevent such inadvertent movement there is provided a bridging device which normally prevents such movement of the hand-lever.

Referring to Figs. 5, 6 and 7, the side member 33 is provided with two lugs 51 located on opposite sides of the recess 39. A sliding rod 52 extends through the hand-lever and is provided with a sliding member 53 upon the lower end of which is mounted a bridge 54 which as shown in Fig. 7 is of sufficient width to bridge the recess 39. A retaining plate 55, attached to the hand-lever, permits the removal of the sliding member 53 and its bridge and also forms a stop member for a shoulder on the bridge 54. A spring 56 located within the hollow handle normally retains the shoulder and plate 55 in contact and the parts in the position shown in Fig. 5. A button 57 is mounted on the end of the rod 52 and so constructed that by the depression of the button the bridge 54 is moved below the lugs 51, allowing inward movement of the hand-lever into the recess 39 to reverse the vehicle. It will therefore be seen that when the bridge is in operative position to bridge the lugs 51 as shown in Figs. 5 and 7, the hand-lever 32 may be moved back and forth along its guide, all danger of inadvertent movement into the recess 39 and to reversing position being avoided, but by a depression of bar 52 by pressure of the thumb on the button 57 the bridge can readily be thrown out of operative position and the lever to reversing position. When the lever is in reversing position, the spring 56 will yieldingly hold the bridge or latch 54 in engagement with the lower faces of the lugs 51. If now the lever is moved to neutral position, the bridge or latch will automatically snap over the lugs and lock the lever against reversing.

Although the bridging device is shown in the form of an elongated lug mounted upon the hand-lever, it will be evident that it is not absolutely necessary that this bridging device be mounted upon the hand-lever, nor need it have the specific construction shown, and it is to be understood therefore that this invention is not to be limited to the specific construction shown and described.

What I claim is:

1. In controlling mechanism for motor vehicles, the combination of a supporting bracket having a bearing lug, a shaft mounted in said lug, a speed controlling lever fixed to said shaft to operate the same, a bearing lug formed on the end of the shaft outside the speed controlling lever, and a brake-lever mounted for pivotal movement on the bearing lug.

2. In controlling mechanism for motor vehicles, the combination of a guide, a hand-lever mounted for movement along and transversely of said guide, and means for normally preventing transverse movement without affecting the freedom of longitudinal movement.

3. In controlling mechanism for motor vehicles, the combination of a guide, a hand-lever mounted for movement along the guide, and transversely of the same at a predetermined point, and means for normally preventing transverse movement without affecting the freedom of longitudinal movement.

4. In controlling mechanism for motor

vehicles, the combination of a guide, a hand-lever mounted for movement along and transversely of said guide, said guide being constructed to permit transverse movement at a predetermined point, and means for normally preventing transverse movement without affecting the freedom of longitudinal movement.

5. In controlling mechanism for motor vehicles, the combination of a guide, a hand-lever mounted for movement along the guide, and transversely of the same at a predetermined point, and means on the lever for normally preventing transverse movement without affecting the freedom of longitudinal movement.

6. In controlling mechanism for motor vehicles, the combination of a guide, a hand-lever mounted for movement along and transversely of said guide, said guide being constructed to permit transverse movement at a predetermined point, and to restrain transverse movement at all other points along the guide, and means on the lever for normally preventing transverse movement without affecting the freedom of longitudinal movement.

7. In controlling mechanism for motor vehicles, the combination of a guide, a hand-lever mounted for movement along and transversely of said guide, said guide being constructed to permit transverse movement at a predetermined point, means for normally preventing transverse movement, and means on the lever for controlling said preventing means without affecting the freedom of longitudinal movement.

8. In controlling mechanism for motor vehicles, the combination of a guide, a hand-lever mounted for movement along and transversely of said guide, and a cross-bar on the hand-lever for normally preventing transverse movement without affecting the freedom of longitudinal movement.

9. In controlling mechanism for motor vehicles, the combination of a guide, a hand-lever mounted for movement along and transversely of said guide, said guide being provided with a recess into which the hand-lever may be moved, and a bridging device for bridging said recess.

10. In controlling mechanism for motor vehicles, the combination of a guide, a hand-lever mounted for movement along and transversely of said guide, said guide being provided with a recess into which the hand-lever may be moved, and a bridging device for bridging said recess and normally preventing transverse movement of the hand-lever, said bridging device adapted to be thrown out of bridging position to permit transverse movement.

11. In controlling mechanism for motor vehicles, the combination of a guide, a hand-lever mounted for movement along and transversely of said guide, said guide being provided with a recess into which the hand-lever may be moved, and a bridging device on the hand-lever for bridging the recess.

12. In controlling mechanism for motor vehicles, the combination of a guide, a hand-lever mounted for movement along and transversely of said guide, said guide being provided with a recess into which the hand-lever may be moved, a bridging device on the hand-lever for bridging the recess, and an operating button on the hand-lever for throwing the bridging device out of bridging position.

13. In controlling mechanism for motor vehicles, the combination with a guide, of a hand lever mounted for movement along and transversely of said guide, and a spring actuated latch for preventing transverse movement of said lever without affecting the freedom of longitudinal movement.

14. In controlling mechanism for motor vehicles, the combination with a guide, of a hand lever mounted for movement along and transversely of said guide, a latch for preventing transverse movement of said lever without affecting the freedom of longitudinal movement, means for opening said latch, and means for automatically restoring said latch to operative position.

15. In controlling mechanism for motor vehicles, the combination with a guide, of a hand lever mounted for movement along and transversely of said guide, a latch for latching said lever against transverse movement without affecting the freedom of longitudinal movement, means for opening said latch to permit said lever to move transversely, and means for automatically restoring said latch to closed position when said lever is moved back.

16. In controlling mechanism for motor vehicles, the combination with a guide comprising side members, one of said side members being provided with a recess, of a hand lever mounted for movement along said guide and transversely of the same into said recess, a latch on said lever adapted to engage said guide to prevent transverse movement of said lever without affecting the freedom of longitudinal movement, means for operating said latch, and a spring for restoring it.

17. In controlling mechanism for motor vehicles, the combination with a guide comprising side members, one of said side members being provided with a recess, of a hand-lever mounted for movement along said guide and transversely of the same into said recess, a lug on one of said side members, a latch on said lever adapted to engage said lug, means for operating said latch, and a spring for restoring it.

18. In controlling mechanism for motor vehicles, the combination with a guide com-

prising side members, one of said side members being provided with a recess, of a hand lever mounted for movement along said guide and transversely of the same into said recess, a lug on one of said side members, a latch on said lever adapted to engage said lug, means for moving said latch below said lug, and a spring to hold said latch in engagement with the lower face of said lug.

In testimony whereof I affix my signature in presence of two witnesses.

RUSSELL HUFF.

Witnesses:

EDITH N. HEARN,

CLARA I. DALE.

R. HUFF.

TRANSMISSION GEARING FOR MOTOR VEHICLES.

APPLICATION FILED MAY 6, 1909.

1,033,102. Patented July 23, 1912.

2 SHEETS—SHEET 1.

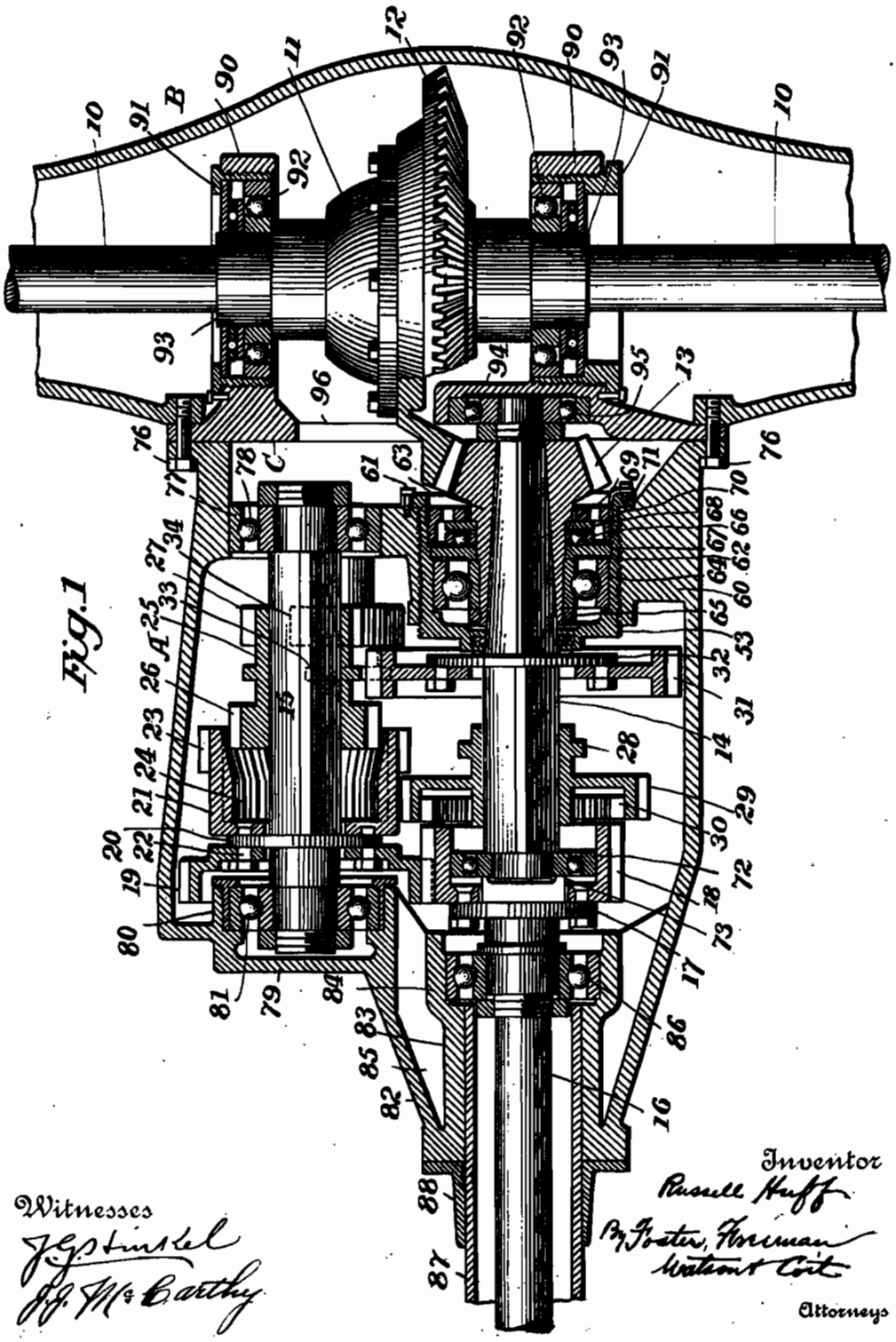

Witnesses

J. G. Stinkel

J. J. McCarthy

Inventor

Russell Huff

By Foster, Freeman Watson & Coit

Attorneys

R. HUFF.

TRANSMISSION GEARING FOR MOTOR VEHICLES.

APPLICATION FILED MAY 6, 1909.

1,033,102. Patented July 23, 1912.

2 SHEETS—SHEET 2.

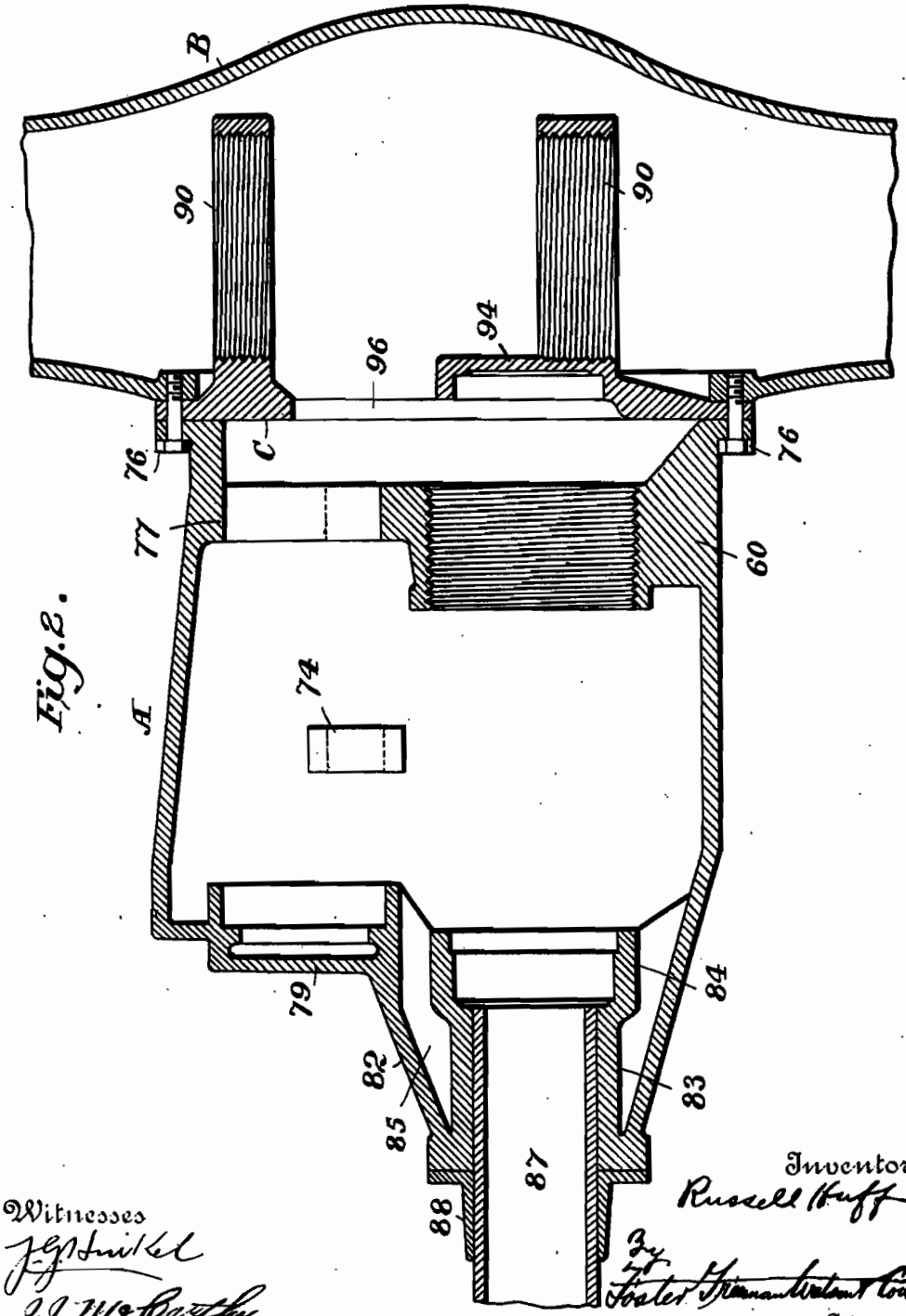

Fig. 2.

Witnesses
J. G. Stinkel
J. J. McCarthy.

Inventor
Russell Huff
By
Foster Freeman Watson & Coit
Attorneys

UNITED STATES PATENT OFFICE.

RUSSELL HUFF, OF DETROIT, MICHIGAN, ASSIGNOR, BY MESNE ASSIGNMENTS, TO PACKARD MOTOR CAR COMPANY, OF DETROIT, MICHIGAN, A CORPORATION OF MICHIGAN.

TRANSMISSION-GEARING FOR MOTOR-VEHICLES.

1,033,102. Specification of Letters Patent. Patented July 23, 1912.

Application filed May 6, 1909. Serial No. 494,456.

To all whom it may concern:

Be it known that I, RUSSELL HUFF, a citizen of the United States, and resident of Detroit, in the county of Wayne and State of Michigan, have invented certain new and useful Improvements in Transmission-Gearing for Motor-Vehicles, of which the following is a specification.

This invention relates to transmission gearing, and particularly to transmission gearing for motor vehicles for transmitting the power from the motor shaft to the rear axle.

The objects of the invention are as follows: to construct the change speed mechanism and in particular a three-speed selective speed transmission mechanism so that it will be compact and in particular compact axially of the shafts; to provide a novel form of thrust bearing for the power shaft which receives the thrust in both directions; and to provide a novel form of three-piece casing or housing for the change speed and differential gears.

The nature, characteristic features and scope of my invention will be more fully understood from the following description taken in connection with the accompanying drawings forming part thereof, in which,—

Figure 1 is a longitudinal sectional view through the change speed and differential gearing; Fig. 2 is a cross section of the casing shown in Fig. 1.

In Fig. 1, A designates the change speed casing and B the differential gear casing. The rear axles 10 extend into the differential housing 11. This differential housing is provided with a bevel gear 12 which meshes with a pinion 13 on the shaft 14. The counter-shaft 15 is mounted in bearings in the casing A. The main driving shaft 16 which connects with the motor is located in axial alinement with the shaft 14.

Referring to Fig. 1 the shaft 16 is provided with a flange 17 to which is bolted gear 18 which meshes with the gear 19 on counter-shaft 15. An overhung gear 21 is mounted on the shaft 15 and is connected to a flange 20 on said shaft by means of bolts 22 extending through the webs in the gears 19 and 21 and the flange 20. The overhung gear is provided on its internal surface with strengthening ribs 24 and on its extreme surface with spur teeth 23. A sleeve 25 is slidingly mounted on the counter shaft 15 and is provided with gears 26 and 27. A sleeve 28 is slidingly mounted on the shaft 14 so as to turn therewith. This sleeve is provided with a gear 29 which has external teeth to coöperate with the teeth 23 and internal teeth 30 to coöperate with the teeth on the gear 18. A gear 31 is bolted to the flange 32 on shaft 14. A sliding sleeve 33 provided with a gear 34 is mounted upon a second counter shaft and this sleeve with its gear is connected with sleeve 25 so as to slide therewith. The gear 34 meshes with 27.

The first or low speed is obtained by sliding gear 26 into engagement with 31; the second speed by sliding gear 29 into engagement with the gear teeth 23; and the third or direct drive is obtained by sliding gear 29 into engagement with gear 18, and reverse by sliding 27 and 34 to left so that 34 engages with 31.

Shafts 14 and 15 are either square in cross section or provided with a key so that the sliding sleeves 25 and 28 are splined thereon. When sleeve 25 is moved to the left, the gear 26 telescopes with the overhung gear 21, the ribs 24 taking in between the teeth on the gear. It is to be noted however that since the sleeve 25 is splined on the shaft 15 these strengthening ribs do not act as gear teeth, but merely as strengthening ribs. They take in loosely between the teeth and do not contact therewith, so they may be left in a rough condition. Where the additional strength is not required the interior of the overhung gear may be left perfectly smooth by dispensing with the ribs 24. The function of said ribs 24 is therefore different from the function of the teeth 30 on the gear 29 which are used for driving purposes only.

It will be noted that the teeth on gear 27 do not mesh with teeth on gear 31. Therefore when the sleeve 25 is moved to the left the gear 27 will drive gear 31 through gear 34 in the reverse direction.

By means of the construction as shown in Fig. 1, the length of the change speed casing is decreased so that the distance between the outside gears on the shaft 16 and its alined shaft 14 is approximately equal to the width of five normal gear faces plus the clearance between the different gears.

Referring to Fig. 1, 53 is an externally threaded sleeve screwed into the lug 60 in the casing, the sleeve being held in locked position by a locking device 61. This sleeve is provided on its internal surface

with a shoulder 62. The pinion 13 is provided with a shank 63 which surrounds the shaft 14 and extends into the sleeve 53. The shank is provided with a number of shoulders as shown. The sleeve receives the annular roller bearing 64, the outer ring of which tightly fits the sleeve and the inner ring is secured to the shank 63 by means of the threaded nut 65. The roller thrust bearing 66 is received between the annular rings 67 and 68 and surrounds the shank 63. The ring 67 bears against shoulder 62 and is restrained thereby. The ring 68 is secured in place by means of an inwardly projecting flange 69 on the threaded sleeve 70. This sleeve 70 is held in adjusted position by means of the locking device 71. The construction of the sleeve 53 and its bearings are such that the thrust of the pinion 13 and the shaft 14 is received in both directions through the roller bearings 66. By loosening the locking device 61 the sleeve and its attached parts may be removed as a unit.

The gear 18 has on its interior surface the roller bearing 72 for one end of the shaft 14 and this roller bearing bears against a lug 73 on the flange 17. The shaft 15 is supported in roller bearings 78 in the supporting lug 77 in the casing and at the other end by a roller bearing 81 supported by an inwardly projecting lug 80. 74 is the counter-shaft bearing lug.

The end 79 of casing A has an outwardly projecting lug 82 provided with an inwardly projecting sleeve 83, webs 85 connecting this sleeve with the casing proper. The sleeve 83 is provided with an enlarged portion 84 to receive the roller bearing 86. The casing 87 for the shaft 16 provided with flange collars 88 extends into the sleeve 83.

Referring to Fig. 1, the end of casing A is closed by an end piece C which is attached to the casing A and to the casing B by through-bolts 76. The end piece C is provided with a pair of bearing lugs 90 which receive the lower bearing sleeves 91 for the hubs 93 of the differential housing 11, and with an end bearing lug 94 for supporting the roller bearing 95 for the shaft 14. As shown in Fig. 1 the end piece C is provided with an opening 96 through which projects the bevel gear 12.

The term "roller bearing" as used in the specification and claims is used in its broadest sense, that is as a generic term including both ball and cylinder antifriction bearings.

It is obvious that various changes in the details of construction may be made without departing from the spirit of this invention, and it is therefore to be understood that this invention is not to be limited to the specific construction shown and described.

Having thus described the invention, what is claimed is:

1. In transmission gearing, in combination, a shaft, an overhung gear thereon and adapted to turn therewith, a smaller gear slidingly mounted on said shaft and adapted to turn therewith, said gears being constructed to telescope one within the other.

2. In transmission gearing, in combination, a shaft, an overhung gear thereon and adapted to turn therewith, a smaller gear splined to said shaft and constructed to telescope within the overhung gear, and strengthening ribs inside said overhung gear arranged to take between the teeth of said smaller gear.

3. In transmission gearing, in combination, a shaft, an overhung gear thereon and adapted to turn therewith, a smaller gear mounted on said shaft and adapted to turn therewith, one of said gears being splined on said shaft, whereby the gears are adapted to telescope one within the other.

4. In transmission gearing, in combination, a shaft, an internally shouldered overhung gear thereon and adapted to turn therewith, a smaller gear mounted on said shaft and adapted to turn therewith, one of said gears being splined on said shaft, whereby the gears are adapted to telescope one within the other, and the smaller gear arranged to take between the shoulders of said overhung gear.

5. In transmission gearing, in combination, a driving shaft, a driven shaft in alinement therewith, a fixed gear on each of said shafts and a plurality of sliding gears cooperating with said gears, said gears being constructed and arranged to drive said driven shaft at three speeds, the distance between the remote edges of the extreme gears on the alined shafts being approximately equal to the aggregate width of five normal gear faces.

6. In transmission gearing, in combination, a driving shaft, a driven shaft in alinement therewith, and a counter shaft, fixed gears on said shafts, sliding gears on said driven and counter shafts, said gears being constructed and arranged to drive said driven shaft at three speeds, the distance between the remote edges of the extreme gears on the alined shafts being approximately equal to the aggregate width of five normal gear faces.

7. In transmission gearing, in combination, a driving shaft, a driven shaft in alinement therewith, and a counter shaft, a fixed gear on each of said shafts, an overhung gear and a smaller gear mounted on said counter shaft to rotate therewith, said last mentioned gears being mounted for movement relative to each other on said shaft to telescope the small gear within the overhung gear.

8. In transmission gearing, in combination, a driving shaft, a driven shaft in alinement therewith, and a counter shaft, a fixed

gear on each of said shafts, an overhung gear and a smaller gear mounted on said counter shaft to rotate therewith, said last mentioned gears being mounted for movement relative to each other on said shaft to telescope the small gear within the overhung gear, all of said gears being so constructed and arranged that the distance between the remote edges of the extreme gears on the alined shafts is approximately equal to the aggregate width of five normal gear faces.

9. In transmission gearing, in combination, a driving shaft, a driven shaft in alinement therewith, and a counter shaft, a fixed gear on each of said shafts, an overhung gear fixed on said counter shaft, a gear splined on said counter shaft and constructed and arranged to telescope within the overhung gear.

10. In transmission gearing, in combination, a driving shaft, a driven shaft in alinement therewith, and a counter shaft, a fixed gear on each of said shafts, an overhung gear interiorly provided with spaced shoulders and fixed on said counter shaft, a gear splined on said counter shaft and constructed and arranged to telescope within the overhung gear, and take between the shoulders of the latter.

11. In transmission gearing, in combination, a driving shaft, a driven shaft in alinement therewith, and a counter shaft, fixed meshing gears on the driving and counter shafts, a fixed gear on the driven shaft, an overhung gear fixed on the counter shaft, a gear splined on the counter shaft, adapted to mesh with the fixed gear on the driven shaft and constructed and arranged to telescope with the overhung gear, and a gear on the driven shaft adapted to mesh with either the overhung gear or the gear on the driving shaft.

12. In transmission gearing, in combination, a driving shaft, a driven shaft, a gear fixed on the driving shaft, an overhung gear on the driven shaft, and longitudinal sliding means coöperating with the gears constructed and arranged to drive said driving shaft at three speeds, the distance between the remote edges of the gear webs on the driving and driven shafts being approximately equal to the aggregate width of four normal gear faces.

13. In transmission gearing, in combination, a shaft, a bearing support, a thrust bearing comprising a shouldered sleeve surrounding the shaft, and a single thrust roller bearing located between the shoulders of the sleeve and constructed and arranged to receive the thrust of said shaft in both directions.

14. In transmission gearing, in combination, a shaft, a bearing support, a thrust bearing comprising a sleeve provided with an internal shoulder, a single thrust roller bearing adapted to rest within the sleeve against the shoulder, and a threaded sleeve adapted to be screwed into the first sleeve, said second sleeve being provided with an annular flange adapted to abut against the roller bearing, and said shaft being provided with shoulders adapted to coöperate with said roller bearing, whereby said bearing is adapted to receive the thrust in both directions.

15. In transmission gearing, the combination with change speed and differential mechanism, interconnected and arranged in proximity to each other, and bearings for said mechanisms, of two detachably connected supporting members arranged end to end and carrying all of said bearings.

16. In transmission gearing, the combination with differential mechanism, a bevel gear mounted thereon, a driving pinion meshing with said gear, and bearings for said mechanism and pinion, of two detachably connected supporting members arranged end to end and carrying all of said bearings.

17. In transmission gearing, the combination with change speed and differential mechanism, of a casing inclosing the change speed mechanism comprising a detachable end piece and bearings for said mechanism supported by the end piece.

18. In transmission gearing the combination with change speed and differential mechanism, of a casing inclosing the change speed mechanism comprising a detachable end piece, bearings for the change speed mechanism supported by the casing, and bearing lugs on the end piece for the differential mechanism.

19. In transmission gearing, the combination with change speed and differential mechanism, of a casing inclosing the change speed mechanism comprising a detachable end piece, bearings for the change speed mechanism supported by the casing, bearing lugs on the end piece for the differential mechanism, and a detachable inclosing casnig for the differential mechanism.

20. In transmission gearing, the combination with change speed and differential mechanism, of a casing inclosing the change speed mechanism comprising a main casing with an integral end and a detachable end piece, and bearings for said mechanism supported by said casing and end piece.

21. In transmission gearing, the combination with change speed and differential mechanism, of a casing inclosing the change speed mechanism comprising a main casing with an integral end and a detachable end piece, bearings for said change speed mechanism supported by said casing and end piece, and bearing lugs on the end piece for the differential mechanism.

22. In transmission gearing, the combination with change speed and differential mechanism, of a casing inclosing the change speed mechanism comprising a main casing with an integral end and a detachable end piece, bearings for said change speed mechanism supported by said casing and end piece, bearing lugs on the end piece for the differential mechanism, and a detachable inclosing casing for the differential mechanism secured to the change speed mechanism casing.

23. In transmission gearing, the combination with change speed and differential mechanism, of a casing inclosing the change speed mechanism comprising a detachable end piece, and bearing lugs on the casing for supporting the change speed mechanism independently of the end piece.

24. In transmission gearing, the combination with change speed and differential mechanism, of a casing inclosing the change speed mechanism comprising a detachable end piece, bearing lugs on the casing for supporting the change speed mechanism independently of the end piece, and an additional bearing on the end piece for said change speed mechanism.

25. In transmission gearing, the combination with change speed and differential mechanism, of a casing inclosing the change speed mechanism comprising a detachable end piece, bearing lugs on the casing for supporting the change speed mechanism independently of the end piece, and bearing lugs on the end piece for the differential mechanism.

26. In transmission gearing, the combination with change speed and differential mechanism, of a casing inclosing the change speed mechanism comprising a detachable end piece, bearings for the change speed mechanism supported at one end by the casing and at the other by the end piece.

27. In transmission gearing, the combination with change speed and differential mechanism, of a casing inclosing the change speed mechanism comprising a detachable end piece, said end piece having an inwardly projecting portion, bearings for the change speed mechanism supported at one end by the casing and at the other by the inwardly projecting end piece.

28. In transmission gearing, a change speed gearing casing comprising a one piece body portion forming the sides, bottom and end, and a detachable end piece.

29. In transmission gearing, a change speed gearing casing comprising a one piece body portion forming the sides, bottom and end, and a detachable end piece, said body portion being provided with bearing lugs.

30. In transmission gearing, a change speed gearing casing comprising a one piece body portion forming the sides, bottom and end, said end being provided with an inwardly extending bearing sleeve.

31. In transmission gearing, a change speed gearing casing comprising a one piece body portion forming the sides, bottom and end, said end being provided with an inwardly extending bearing sleeve, and strengthening webs connecting the sleeve and the casing.

32. In transmission gearing, a change speed gearing casing comprising a one piece body portion forming the sides, bottom and end, said end being provided with an outwardly projecting bearing lug provided with an inwardly projecting bearing sleeve.

33. In transmission gearing, a change speed gearing casing comprising a one piece body portion forming the sides, bottom and end, and a detachable end piece provided with a pair of bearing lugs.

34. In transmission gearing, a change speed gearing casing comprising a one piece body portion forming the sides, bottom and end, and a detachable end piece provided with a pair of bearing lugs, and a bearing lug extending into the casing.

35. In transmission gearing, a change speed and differential gearing casing comprising a one piece change speed gearing casing, a detachable end for said casing, and a detachable differential gearing casing.

36. In transmission gearing, a change speed and differential gear casing comprising a one piece body portion forming the side, bottom and end of the change speed casing, a detachable end piece, and a detachable differential gear casing attached to said end piece and body portion.

37. In transmission gearing, a change speed and differential gear casing comprising a one piece body portion forming the side, bottom and end of the change speed casing, a detachable end piece, and a detachable differential gear casing attached to said end piece and body portion, said end piece being provided with bearing lugs projecting into the differential gear casing.

38. In transmission gearing, the combination with a shaft, gearing on one end thereof, a sliding member having a plurality of gear faces arranged on the opposite end portion of said shaft, and a bearing support, of a single thrust roller-bearing adapted to receive the thrust on the shaft in both directions.

39. In transmission gearing, the combination with change speed and differential mechanism, of a casing arranged in advance of the differential mechanism and inclosing said change speed mechanism, and bearings for said differential mechanism supported by said casing so as to form a unit therewith.

40. In transmission gearing, the combination with change speed and differential

mechanism, of a casing inclosing said change speed mechanism, and bearing lugs projecting from one end of said casing and in alinement with the change speed mechanism and forming bearings for said differential mechanism.

41. In transmission gearing, the combination with change speed and differential mechanism including driving and driven bevel gears, of a casing inclosing said change speed mechanism, and bearings for said bevel gears supported by said casing and arranged in alinement therewith.

42. In transmission gearing, the combination with change speed and differential mechanism, of a casing for said differential mechanism, a casing inclosing said change speed mechanism and adapted to be secured to said differential casing, and bearings for said differential mechanism supported by the second named casing.

43. In transmission gearing, the combination with change speed and differential mechanism, of a casing for said differential mechanism, provided with a front opening, a casing inclosing said change speed mechanism and adapted to be secured to said differential casing at said opening, and bearings for said differential mechanism supported by the second named casing.

44. In transmission gearing, the combination with change speed and differential mechanism, of a casing for said differential mechanism, provided with a front opening, a casing inclosing said change speed mechanism, bearing lugs projecting from an end wall of said change speed casing and forming bearings for said differential mechanism, and means for securing said change speed casing to said differential casing with said differential in place in its casing.

45. In transmission gearing, the combination with change speed and differential mechanisms, of casings inclosing said mechanisms, bearings for said differential mechanism supported by said change speed casing, and driven shafts extending into said differential casing and having a detachable connection with said differential mechanism.

46. In transmission gearing, the combination with change speed and differential mechanism, of a sectional casing inclosing said change speed mechanism, bearings for said change speed mechanism supported by one of the casing sections and bearings for said differential mechanism supported by another of said casing sections, and driven shafts having a detachable connection with said differential mechanism.

47. In transmission gearing, the combination with change speed and differential mechanism, of detachably connected casings inclosing said mechanisms and permitting the differential mechanism to be withdrawn from the differential casing with the change speed casing, bearing lugs projecting from an end wall of said change speed casing, hubs for said differential mechanism supported in said lugs, and driven shafts having a detachable connection to said hubs.

48. In transmission gearing, the combination with driving and driven bevel gears, of a support having bearings for said gears and adapted to support them as a unit, a casing for said driven bevel gear, and means for detachably securing said support to said casing with the driven bevel gear in its casing.

49. In transmission gearing, the combination with driving and driven bevel gears, of a support having a bearing for said driving bevel gear and a pair of spaced bearing lugs thereon for the driven bevel gear, a casing for said driven bevel gear, and means for detachably securing said support to said casing with the driven bevel gear in its said casing.

50. In transmission gearing, the combination with driving and driven bevel gears, of a support having bearings for said gears and adapted to support them as a unit, a casing for said driving and driven bevel gears, means for detachably securing said support to said casing with the bevel gears in their casing, and means for adjusting said gears relatively to each other on said support.

51. In transmission gearing, the combination with change speed and differential mechanism; of a casing open at one end and inclosing the said change speed mechanism, and an end piece forming a closure for the open end of the casing, and bearings for the differential and change speed mechanism supported by said end piece.

52. In transmission gearing, the combination with change speed and differential mechanism; of a casing open at one end and inclosing said change speed mechanism, an end piece detachably secured to the casing and forming a closure for the open end thereof, and bearings for the differential and change speed mechanism carried by said end piece.

In testimony whereof I affix my signature in presence of two witnesses.

RUSSELL HUFF.

Witnesses:

VINCENT LINK,
DON T. HASTINGS.

R. HUFF.

HYDROCARBON MOTOR.

APPLICATION FILED JULY 2, 1909.

1,112,536.

Patented Oct. 6, 1914.

3 SHEETS—SHEET 1.

Fig. 1.

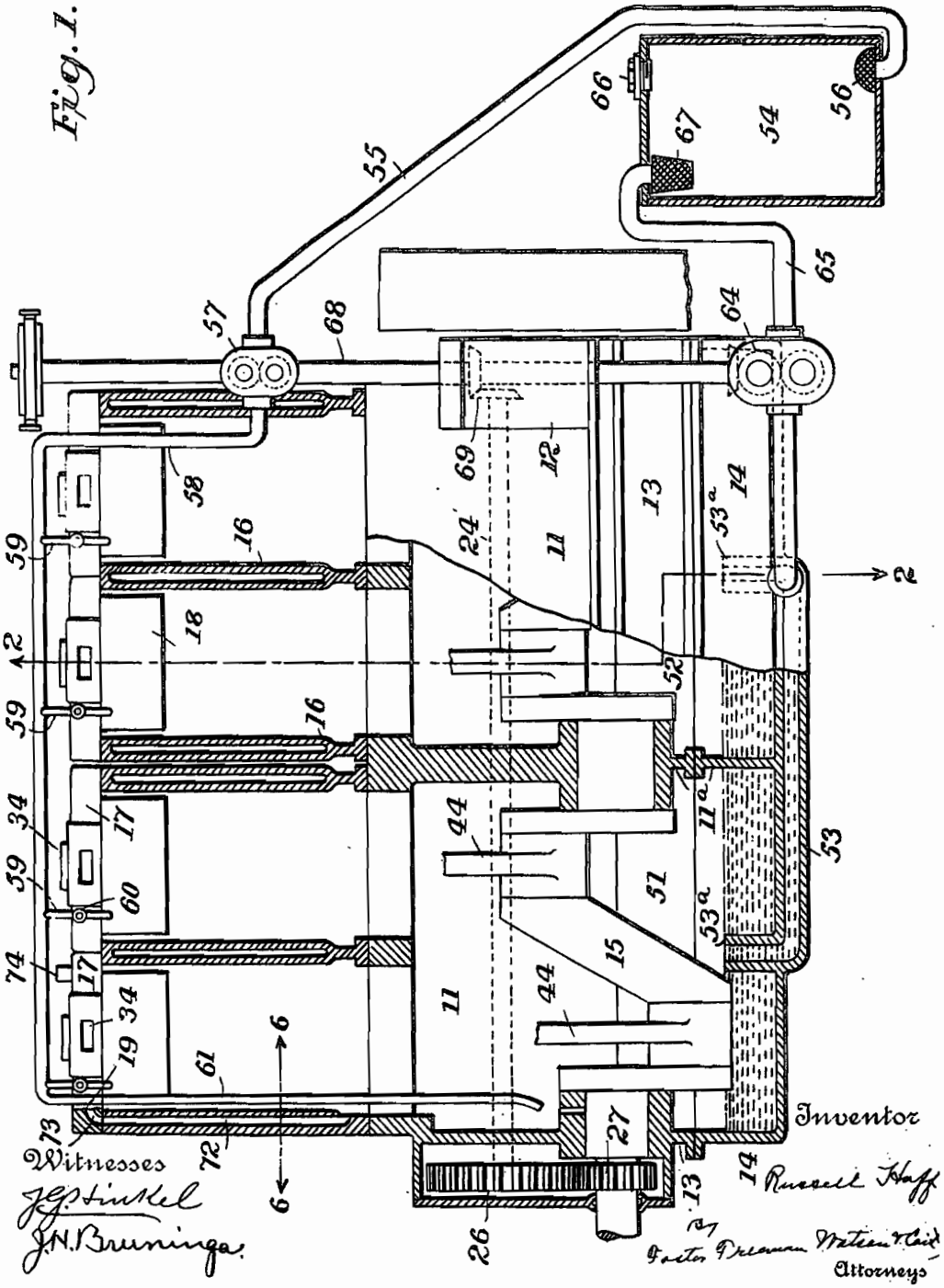

R. HUFF.

HYDROCARBON MOTOR.

APPLICATION FILED JULY 2, 1909.

1,112,536.

Patented Oct. 6, 1914.

3 SHEETS—SHEET 2.

Fig. 2.

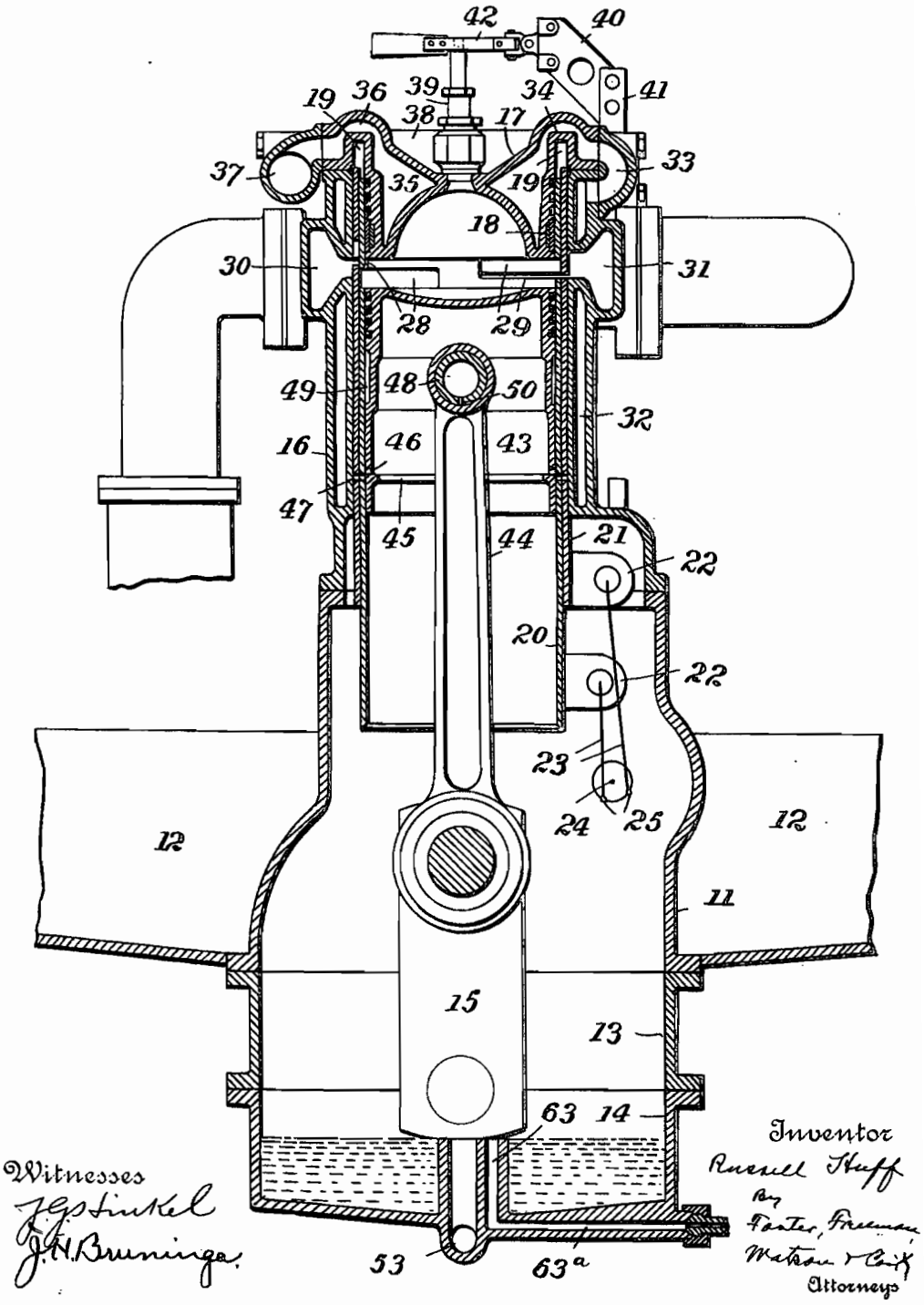

Witnesses
J. G. Stinkel
J. H. Bruninga.

Inventor
Russell Huff
By
Foster, Freeman, Watson & Coit
Attorneys

R. HUFF.

HYDROCARBON MOTOR.

APPLICATION FILED JULY 2, 1909.

1,112,536.

Patented Oct. 6, 1914.

3 SHEETS—SHEET 3.

Fig. 3.

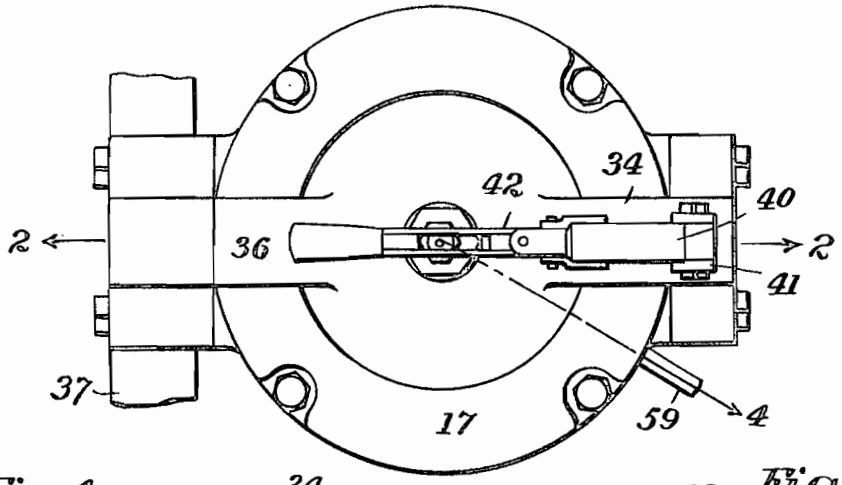

Fig. 4.

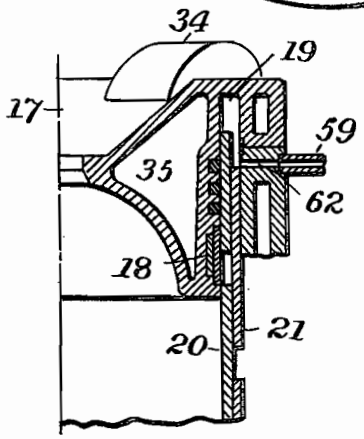

Fig. 7

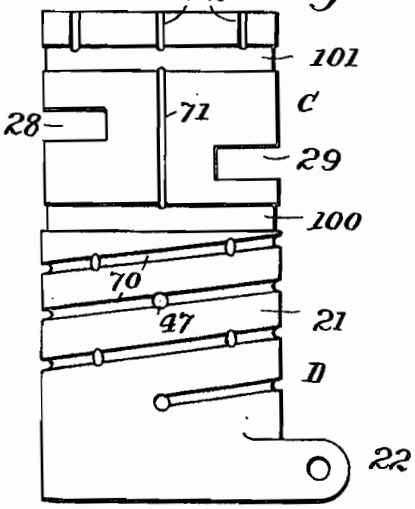

Fig. 5.

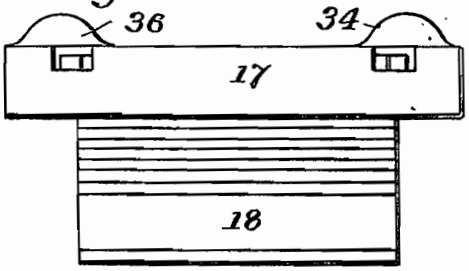

Fig. 6.

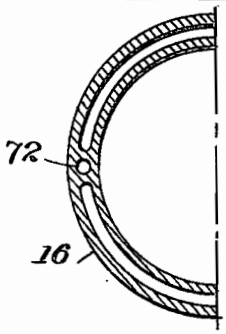

Witnesses

J. G. Sinkel

J. H. Bruninga.

Inventor

Russell Huff

By

Foster, Freeman, Watson & Coit

Attorneys

UNITED STATES PATENT OFFICE.

RUSSELL HUFF, OF DETROIT, MICHIGAN, ASSIGNOR, BY MESNE ASSIGNMENTS, TO PACKARD MOTOR CAR COMPANY, OF DETROIT, MICHIGAN, A CORPORATION OF MICHIGAN.

HYDROCARBON-MOTOR.

1,112,536. Specification of Letters Patent. Patented Oct. 6, 1914.

Application filed July 2, 1909. Serial No. 505,735.

To all whom it may concern:

Be it known that I, RUSSELL HUFF, a citizen of the United States, and resident of Detroit, in the county of Wayne and State of Michigan, have invented certain new and useful Improvements in Hydrocarbon-Motors, of which the following is a specification.

This invention relates to oiling systems, and in particular to oiling systems for motors used for propelling vehicles.

In multi-cylinder motors used in motor vehicles the cylinders are usually arranged vertically and in line and bolted separately or in pairs to a single crank case, which case is usually divided into compartments forming oil wells into which the cranks dip to splash the oil over the working parts of the motor. It is necessary that a sufficient supply of oil be maintained in the crank case compartments and it is desirable that the oil be kept at a constant and uniform level in all the compartments which is somewhat difficult to effect when the vehicle is on an incline as when going up or down hill. In motors of the cylindrical slide-valve type it has been difficult heretofore to properly lubricate the valve sleeves, and it has been found that the valve sleeves which surround the combustion chamber are liable to expand and stick.

Some of the objects of this invention are to provide an oiling system to maintain the oil in the various compartments at a uniform and constant level, to provide an improved means for lubricating the valves, and to so construct the valves that sticking due to expansion will not take place.

One of the features of this invention, broadly considered, consists in dividing the crank case into front and rear compartments and connecting these compartments by an equalizing duct terminating in risers extending into the oil wells and opening at substantially the normal oil level therein.

Another feature of this invention consists in a supply and discharge means for maintaining the oil in the compartments at a fixed level. Broadly stated, it consists of means for supplying the oil to the crank case at a rate slightly in excess of what can be used by the motor and of means for withdrawing oil from the crank case when the level therein rises above the predetermined normal oil level. These means preferably consist of a small constantly driven pump which supplies the oil from a reservoir to the crank case and of a discharge pump having a capacity slightly in excess of the feeding pump and connected with an outlet pipe which opens into the oil well of one or both of the compartments at substantially the normal oil level. Said discharge pump preferably discharges into the reservoir whereby the oil is kept in constant circulation.

Another feature of this invention consists in means for supplying oil to the cylindrical valve sleeves. Under some conditions these sleeves will receive sufficient lubrication by splash from the crank case, the oil working up between the sleeves by their constant reciprocation, and to augment this splash system the piston is provided internally with a ledge which gathers some of the oil from the crank case and carries it upwardly where it is discharged between the sleeves through registering openings in the piston and sleeves, and a vertical duct or channel is also provided to connect a chamber or cavity above the valve sleeves with the crank case so that the oil vapor thrown up by the cranks will pass up this channel and lubricate the sleeves. As an auxiliary oil supply means, which may be cut off from the individual cylinders by means of hand valves, a branch pipe from the feeding pump supplies oil under pressure to the chamber or cavity located above the sleeves, and any excess of oil thus supplied passes through channels formed between the sleeves and down into the crank case.

Another feature of this invention consists in the construction of the valve sleeves. A portion of the sleeve near the head end of the cylinder is ground to a diameter a few thousandths of an inch less than the diameter of the rest of the sleeve, in this way allowing for greater expansion at the head end. Another method of obtaining the same result is to taper the valve sleeve toward the head end.

Another feature of this invention consists in the construction of the cylinder head, which is cored so as to provide a water space and is provided with raised portions forming inlet and discharge passages connecting with the water space in the head. The head is of dished formation and by providing these raised portions the total depth of this

dished portion which receives the spark plug is reduced thereby rendering the plug more accessible.

In the drawings: Figure 1 is a vertical longitudinal section partly in elevation through the crank case and cylinders; Fig. 2 is a transverse section on the line 2—2 of Fig. 1; Fig. 3 is a plan view of one of the cylinders; Fig. 4 is a section on the line 4—4 of Fig. 3; Fig. 5 is a detail view of the cylinder head; Fig. 6 is a section on the line 6—6 of Fig. 1; Fig. 7 is a detail of one of the valve sleeves.

Referring to the drawings, 11 designates the upper section of the crank case provided with integral side arms 12 for supporting the engine structure from the side bars of a motor vehicle, 13 the intermediate section, and 14 the lower section of the crank case. The crank shaft 15 is journaled in bearings between the sections 13 and 11. All of the sections are bolted together in a manner well understood by those skilled in the art.

The cylinders 16 are bolted to the crank case. These cylinders in the construction shown are cast in pairs. Each cylinder is provided with a cylinder head 17, provided with a downwardly extended portion 18 of smaller diameter than the internal diameter of the cylinder, thereby forming an annular space or chamber 19. The downwardly projecting portion 18 is provided with the usual packing rings. An inner valve sleeve 20 and an outer valve sleeve 21 are mounted to slide on each other in the cylinder. These valve sleeves are provided with ears 22, and connecting rods 23 connect these ears with the eccentrics 25 mounted upon the valve shaft 24. These eccentrics are shown diagrammatically in Fig. 2 and are placed about eighty degrees apart. The valve shaft 24 is driven from the crank shaft by means of the two-to-one gears 27, 26. The sleeves are provided with inlet ports 28 and exhaust ports 29, communicating with the inlet 30 and exhaust 31 respectively. The operation of the valves thus described will be obvious from the arrangement shown in Fig. 2. The cylinders are provided with water jacket spaces 32. Each one of the cylinders is provided with a shallow elbow 33, communicating with the passage 34 and with the cavity 35 in the head. A discharge duct 36 upon the opposite side of the cylinder communicates with the pipe 37 leading to the radiator. The inlet duct or channel 34 and the outlet duct or channel 36 are formed by raised portions on the cylinder head, this construction being clearly shown in Figs. 2 to 5 inclusive. By means of this construction the depth of the recessed portion 38 is decreased, and the spark plug 39 is rendered accessible so that it may be engaged by the ordinary wrench. This construction has a decided advantage over those constructions in which the cylinder head is provided with an annular space communicating with the cavity 35.

A high tension wire support 40 is supported from a standard 41, and a knife switch 42 electrically connects the spark plug 39 with the high tension supply.

The piston 43, which is of the usual trunk type, reciprocates within the inner sleeve 20 and is connected to the crank shaft 15 by means of the usual connecting rod 44. The piston head is provided with an annular ledge 45, and with a series of holes 46 located above this ledge and communicating with similar holes 47 in the valve sleeves 20 and 21. The oil thrown up by the cranks is caught by the ledge 45 and lubricates the sleeves. The piston head is provided with an annular groove 49, into which the ends of the hollow wrist pin 48 open and which leads the oil caught from the sleeves into said wrist pin 48 and hence it passes through holes 50 to the connecting rod bearing.

The lower section of the crank case is divided by a partition 11^a into compartments 51, 52, forming oil wells or pockets. An equalizing conduit 53 connects these compartments and terminates in risers 53^a, opening into the pockets at the normal oil level.

The oil tank 54 is connected by the pipe 55 to the feeding pump 57, a screen or filter 56 being interposed in the connection. A pipe 58 leads from the pump 57, and is connected by branch pipes 59 to the annular chambers or cavities 19, formed between the cylinder head and the cylinder. Hand valves 60 are provided whereby the supply to the separate cylinders may be independently controlled or cut off. An overflow pipe 61 discharges into the crank case. As shown in Fig. 4 passages 62 connect the branches 59 with the annular chambers 19.

From the above it will be seen that the oil is supplied to the annular chambers 19 under pressure. If the eccentrics 25 were placed one hundred eighty degrees apart the pressure within this cavity 19 would remain constant. Since, however, these cranks are placed approximately eighty degrees apart the atmosphere in the cavity 19 is alternately rarefied and compressed, and thus the oil will be drawn in when the pressure drops. The sleeve 21 also operates to close the passage 62 so as to cut off the oil supply.

A riser or stand pipe 63 communicates with an outlet pipe 63^a leading to a discharge pump 64, which discharges through a pipe 65 and a screen 67 into the oil supply tank 54. The riser or stand pipe 63 opens into the compartment 52 at substantially the normal oil level therein, and is preferably placed alongside of one of the risers 53^a. In the construction shown the duct 53, its risers 53^a, the riser 63 and the outlet pipe 63^a are cast integrally with section 14 of the crank case.

The pumps 57 and 64 are preferably of the gear type, and are driven through a common shaft 68, which may be the commutator shaft, through gears 69 from the valve shaft 24. The capacity of the pump 64 is slightly in excess of that of 57. This may be accomplished by making 64 larger than 57 or by driving 64 at a higher rate of speed than 57. In this way it is insured that the oil in the compartment 52 will remain at a constant level, and since the pump 57 feeds the oil in excess of the rate at which it is used, the level of the oil will never drop below the level of the risers. The conduit 53 connecting the compartments will insure that the level of the oil will remain the same in both compartments, and even when the vehicle is on an incline, as when going up hill, the construction of the risers 53[a] will prevent all the oil in one compartment from flowing into the adjacent one.

Referring to Fig. 7, the valve sleeves are provided with a helical groove 70 communicating with the holes 47 hereinbefore described. The sleeves are also provided with transverse grooves 100 and 101 communicating by means of a groove 71, and a series of grooves 102 are provided communicating with the annular chamber 19. In order to prevent the valves from sticking, due to the unequal expansion, the head end C is ground down to a diameter a few thousandths of an inch smaller than the crank end D. The same result may be obtained by tapering the sleeves toward the head or hotter end. It is obvious, however, that this taper need be only very slight. By means of the construction shown and described all sticking of the valves is prevented.

Referring to Figs. 1 and 6, the cylinder wall is provided with a vertical channel 72 communicating with the crank casing, and an alined channel 73 formed in the cylinder head communicates at one side of the cylinder head with the annular chamber 19. The vent 74 opens into the annular chamber 19 at a point opposite the opening of the channel 73. The oil kicked up by the cranks will pass up through channel 72, aided by the gases in the crank casing which pass up through chamber 19 and out of the vent 74. The oil passing up 72 will enter into the chamber 19 and lubricate the valves, while the gases will escape through the vent 74. The channel 72 in the construction shown is formed in the cylinder walls. It is obvious, however, that this may be a separate pipe located on the outside of the cylinder. This invention therefore provides two separate systems for oiling the sleeves, one being through the branch pipes 59 and the other through the channel 72. When running at ordinary speeds the latter system is used, the branch pipes 59 being shut off by means of the hand valves 60. However, when running at high speed, both systems are used simultaneously in order to provide increased lubrication at high speed. It is obvious, however, that the system supplied through the branch pipes 59 may be used independently of the system supplied through the channels 72. When using the branch pipe system independently of the system supplied through the channels 72 it may be convenient, in order to produce the vacuum in chamber 19, to close the vents 74 and to open another series of vents communicating with the crank casing directly so as to equalize the pressure therein. Since, however, the oil is supplied to the branch pipes 59 under pressure from the pump 57, both systems may be used simultaneously.

Although there is shown a single outlet pipe and riser 63 for one of the compartments, it is obvious that an outlet may be provided for each compartment. It is also obvious that instead of utilizing the pump 57 for feeding the crank case, the tank 54 may be elevated and the oil fed by gravity, the pump 64 discharging into the tank.

Although I have shown the oiling system as applied to an engine of the hydrocarbon type, it is obvious that this oiling system may be applied to other types of engines. The system for supplying the crank case so as to maintain the oil level constant therein may be applied to other types of mechanism, for instance, it may be applied to transmission gear casings. It is therefore to be understood that the claims to this oiling system are to be construed broadly and not limited to any particular type of mechanism. It is obvious therefore that various changes may be made in the details of construction without departing from this invention, and it is to be understood therefore that this invention is not to be limited to the specific construction shown.

No claim is herein made to the particular construction of cylinder head and valve hereinbefore described, the right to present claims for such features in divisional applications being, however, specifically reserved.

What I claim is:

1. In a multi-cylinder engine, the combination with the crank case and with the cylinders having valves operated in the heads thereof, of means for supplying lubrication to said crank case and to the heads for lubricating the valves comprising a supply tank, a conduit leading from said supply tank to said crank case and having branches leading to said heads, a conduit for returning the oil from the crank case to the tank, and means for circulating the oil through the conduits.

2. In a hydrocarbon motor, the combination with the crank case and the cylinder having an annular valve chamber, of a

sleeve valve in said chamber, and means for supplying lubricant from the crank case to said valve chamber.

3. In a hydrocarbon motor, the combination with the crank case and the cylinder having an annular valve chamber concentric with the bore of the cylinder, of a sleeve valve in said chamber, and a conduit for supplying lubricant from the crank case to said chamber.

4. In a hydrocarbon motor, the combination with the crank case and cylinder mounted thereon, the cylinder being provided with an annular valve chamber in the head thereof, of an annular sleeve valve adapted to operate in said chamber, an oil conduit leading from the crank case to said annular chamber and means whereby the surplus oil is returned from said chamber to the crank case.

5. In a multicylinder hydrocarbon engine, the combination, with the crank shaft and the cylinders having sleeve valves operating in the heads thereof, of an oil supply, circulating means for feeding oil to the crank shaft bearings and the sleeve valves, from said supply, and means for returning oil from the sleeve valves to the supply.

6. The combination with a cylinder and crank case, of a sleeve valve for the cylinder, a chamber therefor, and an oil conduit leading from the crank case and discharging into the valve chamber.

7. The combination with a cylinder and crank case, of a sleeve valve for the cylinder, a chamber therefor, an oil conduit leading from the crank case and discharging into the valve chamber, and a vent for said chamber.

8. The combination with a cylinder and crank case, of a cylindrical sleeve valve for the cylinder, the cylinder being provided with an annular valve chamber, and an oil conduit leading from the crank case and discharging into the annular chamber.

9. The combination with a cylinder and crank case, of a cylindrical sleeve valve for the cylinder, the cylinder being provided with an annular valve chamber, an oil conduit leading from the crank case and discharging into the annular chamber, and a vent opening into the annular chamber at a point on the opposite side of the cylinder from the conduit.

10. The combination with a cylinder, of a valve chamber formed therein, a plurality of sleeve valves working in the chamber so as to alternately compress and rarefy the atmosphere therein, and an oil inlet opening into the valve chamber.

11. The combination with a cylinder, of a valve chamber formed therein, a plurality of sleeve valves working in the chamber so as to alternately compress and rarefy the atmosphere therein, and an oil inlet opening into the valve chamber, said valves being constructed to alternately cover and uncover the inlet.

12. The combination with a cylinder, of a valve chamber formed therein, a plurality of sleeve valves working in the chamber so as to alternately compress and rarefy the atmosphere therein, an oil inlet opening into the valve chamber, and means for supplying oil under pressure.

13. The combination with a cylinder, of an annular valve chamber formed therein, a plurality of cylindrical sleeve valves working in the chamber so as to alternately compress and rarefy the atmosphere therein, and an oil inlet opening into the valve chamber.

14. In an engine, the combination with a cylinder, of a cylindrical valve working in the cylinder, a trunk piston working in the valve and provided with an annular ledge, and holes above the ledge extending through the piston walls.

15. In an engine, the combination with a cylinder, of a series of superposed cylindrical valves working in the cylinder, a trunk piston working in the cylindrical valves and provided with an annular ledge, and holes above the ledge extending through the piston walls, said cylindrical valves having cooperating oil holes and grooves communicating with the holes in the piston.

16. In an engine, the combination with a cylinder, of a cylindrical valve working in the cylinder, a trunk piston working in the valve and provided with an annular ledge, holes above the ledge extending through the piston walls, a crank for operating the piston, and a crank case provided with an oil well whereby the crank will throw oil on the annular flange.

17. The combination with a cylinder provided with an annular valve chamber, of an annular sleeve valve in said chamber, and an oil inlet opening into the valve chamber, said valve being provided with oil grooves adapted to distribute oil over the surface thereof.

18. The combination with a cylinder, of a pair of superposed cylindrical valves therefor, the cylinder being provided with an annular valve chamber, and an oil inlet opening into the valve chamber, the valves being provided with oil grooves opening into the valve chamber.

In testimony whereof I affix my signature in presence of two witnesses.

RUSSELL HUFF.

Witnesses:
EDITH N. HEARN,
CLARA I. DALE.

R. HUFF.

VEHICLE BRAKE.

APPLICATION FILED JULY 16, 1909.

1,147,728.

Patented July 27, 1915.

2 SHEETS—SHEET 1.

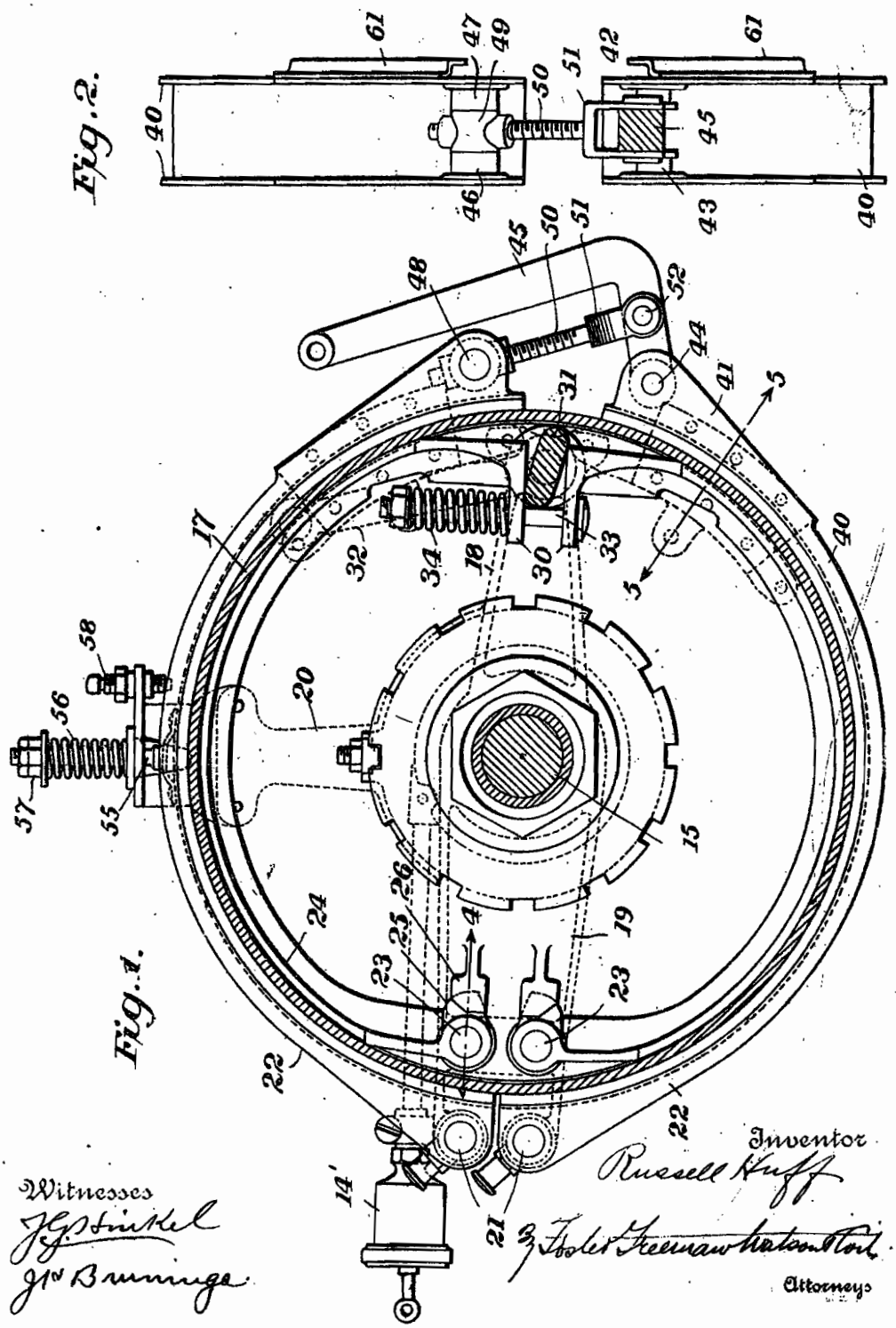

Witnesses

J. G. Hinkel

J. H. Brunnige

Inventor

Russell Huff

By Foster Freeman Watson & Coit

Attorneys

R. HUFF.

VEHICLE BRAKE.

APPLICATION FILED JULY 16, 1909.

1,147,728.

Patented July 27, 1915.

2 SHEETS—SHEET 2.

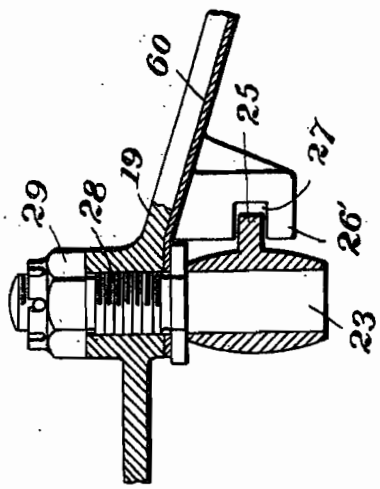

Fig. 4.

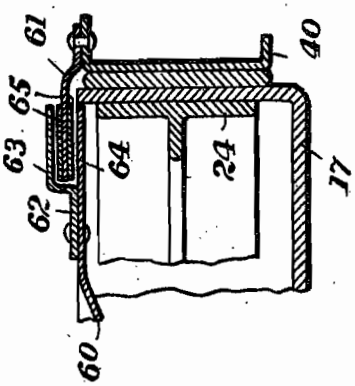

Fig. 5.

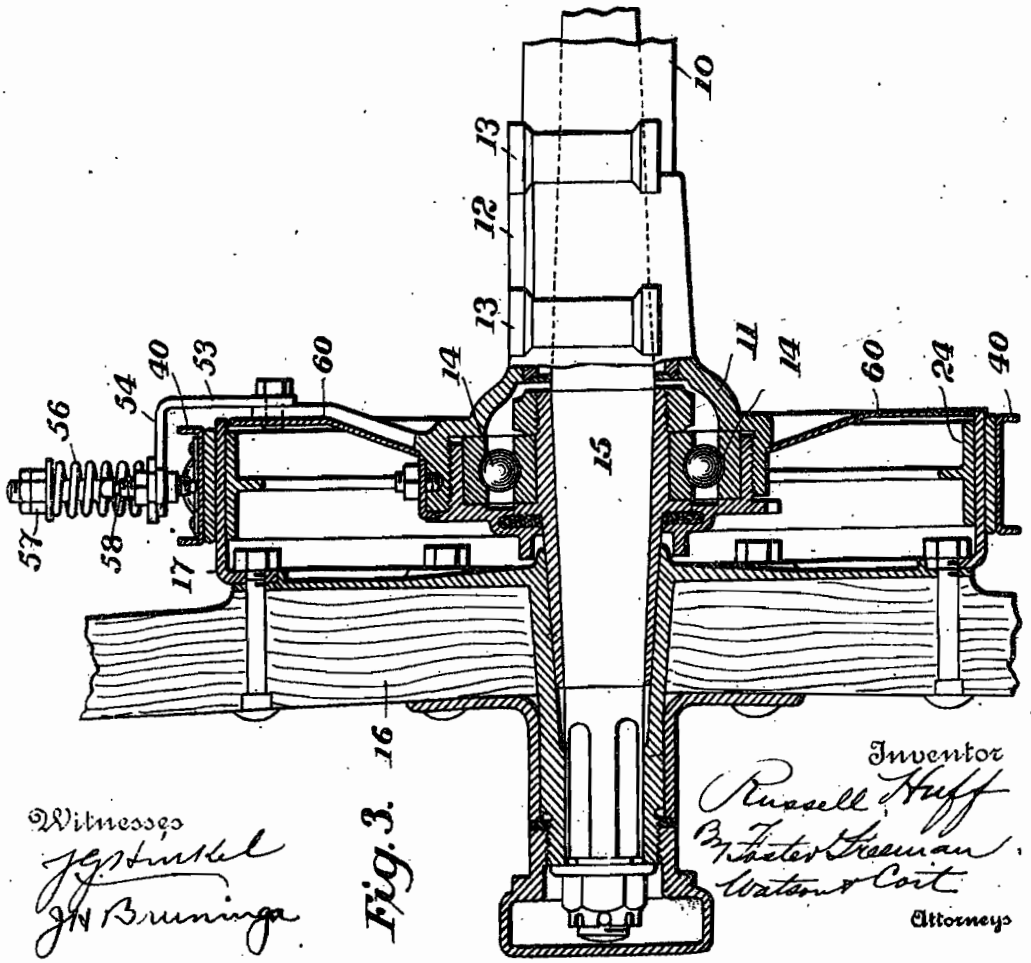

Fig. 3.

Witnesses

J. G. Hinkel

J. H. Bruninga

Inventor

Russell Huff

By Foster Freeman

Watson & Coit

Attorneys

UNITED STATES PATENT OFFICE.

RUSSELL HUFF, OF DETROIT, MICHIGAN, ASSIGNOR, BY MESNE ASSIGNMENTS, TO PACKARD MOTOR CAR COMPANY, OF DETROIT, MICHIGAN, A CORPORATION OF MICHIGAN.

VEHICLE-BRAKE.

1,147,728. Specification of Letters Patent. Patented July 27, 1915.

Application filed July 16, 1909. Serial No. 507,940.

To all whom it may concern:

Be it known that I, RUSSELL HUFF, a citizen of the United States, and resident of Detroit, in the county of Wayne and State of Michigan, have invented certain new and useful Improvements in Vehicle-Brakes, of which the following is a specification.

This invention relates to motor vehicle brakes, and in particular to brakes of the type described in patent to Schmidt #824,151 June 26th, 1906.

The objects of this invention are to improve in general the construction of the brake, to provide means whereby it is insured that the shoes will be moved out of engagement with the coöperating brake drum, to provide a construction whereby the shoes may be readily removed, and to provide an anti-rattling device for the brake shoes.

The invention broadly stated consists in a brake drum which is adapted to be secured to the vehicle wheel, and inner and outer brake shoes which are arranged to be moved into braking engagement with the opposite sides of the drum. The upper outer brake shoe is provided with a spring for moving it out of engagement with the drum. An adjustable stop is also provided to limit this movement. The outer brake shoes are provided with integral flanges which are widened at the ends, and pivot pieces are brazed to these widened portions which receive the pivots for the toggle mechanism. The shoes are provided with segmental plates which extend inwardly toward the center of the brake drum. The support is provided with off-set plates forming slots or sockets and the plates are lined with leather or any other noise-deadening material. The segmental plates enter these sockets and are engaged loosely by the walls thereof. In this way an anti-rattling device is provided. The inner brake shoes are extended inwardly forming lugs, which are engaged by a spreading cam to spread the inner shoes and move them into braking engagement with the drum. A bolt extended through these lugs has a spring mounted upon it to normally move the shoes into disengaging position. The brake shoes are mounted upon their pivots for endwise removal and are provided with lugs which coöperate with recesses formed in the support. The lugs and recesses are in engagement when the brake shoes are in operative position; but when the drum is removed and the brake shoes are swung outwardly the lugs move out of engagement with the recesses and permit the endwise removal of the shoes from their pivots.

In the drawings: Figure 1 is an elevation of the brake showing the drum in section; Fig. 2 is a front elevation of the outer brake shoes, parts of the mechanism being shown in section; Fig. 3 is a vertical section through the wheel and brake drum; Fig. 4 is a section on the line 4 of Fig. 1; and Fig. 5 is a section on the line 5—5 of Fig. 1.

Referring to the drawings, 10 designates the stationary rear axle tube which has firmly secured to it the bracket or support 11, the upper flat portion 12 of which forms the spring seat, bosses 13 being provided for the spring shackles. In the outer end of the support 11 is the annular ball-bearing 14 for the outer end of the driving axle 15. A grease cup 14′ is provided for the ball-bearing 14. The rear driving wheel 16 is suitably keyed to the end of the axle section 15 in the usual manner. The brake drum 17 is secured to the rear wheel and is provided with inner and outer braking surfaces.

Upon the bracket 11 are mounted three arms 18, 19 and 20. The arm 19 forms the anchor for the brake shoes and has mounted thereon a pair of pivots 21 for the outer brake shoes 22, which form the outer brake band, and a pair of pivots 23 for the inner brake shoes 24, which form the inner brake band.

The brake shoes 24 are mounted for endwise movement on the pivots 23, and are provided with lugs 25 which engage recesses 27 formed in projections 26 mounted upon the bracket 19. When the brake shoes are in operative position with the lugs 25 engaging the recesses, the lugs 26′, which are produced due to the formation of the recesses 27, prevent the endwise removal of the brake shoes. The pivots 23 are secured to the bracket 19 in the manner shown in Fig. 4, these pivots being provided with threaded shanks 28 upon which are screwed lock nuts 29. The brake shoes are provided with inturned lugs 30 engaged by a spreading cam 31 which is operated through a

lever 32 connected to the brake operating lever. A bolt 33 extends through the lugs and has mounted upon it a spring 34 which moves the shoes out of engagement with the drum.

When the drum 17 and the outer brake shoes 22 are removed, the inner brake shoes may be swung on their pivots until the lugs 25 move out of engagement with the recesses 27, thereby permitting the brake shoes to be removed from the pivots 23 by an endwise movement. By means of this construction the usual nuts and cotter pins are dispensed with. It will be seen that the coöperating lug 25 and recess 27 form a bayonet joint.

The outer brake shoes 22 may be steel stampings and are provided with side flanges 40 which flanges are widened at the ends as shown at 41. Pivot pieces 42, 43 are brazed to the flange portions 41 of the lower shoe and are centrally bored to receive a pivot pin 44 extending through the lever 45, which forms one of the links of the toggle mechanism and which is connected with the brake operating lever. The upper brake shoe is similarly provided with pivot pieces 46, 47 brazed thereto and centrally bored to receive a pivot pin 48 provided with a transverse hole. A nut 49 is mounted upon the pivot pin 48 and is provided with a threaded portion to receive the shank 50 of the other toggle link 51, which is pivotally connected to the lever 45 at 52. The pivot pin 48 is held in place by means of the shank 50 which extends through the transverse hole formed therein. By means of this construction the brake shoes 22 may be adjusted.

The arm 20 is provided with a bracket 53 having an overhanging portion 54. A bolt 55 is connected to the upper brake shoe near its middle, extends through the overhanging portion 54 and is provided with lock nuts 57. A spring 56 is mounted upon the bolt between the nuts and the overhanging portion 54 and normally tends to hold the upper brake shoe out of engagement with the drum. An adjustable stop 58 limits the upward movement of the brake shoe. When the lever 45 moves the brake shoes away from the drum the upper brake shoe will be moved out of engagement until it meets the stop 58, and thereafter the power is all transmitted to move the lower brake shoe out of engagement. The above construction therefore insures that both brake shoes are moved out of engagement. If the adjustable stop 58 is not provided the upper brake shoe may move upwardly until it engages the overhanging portion 54; this may not be sufficient to disengage the lower shoe. By providing an adjustable stop the wear of the brake shoe may be compensated for.

An aluminum dust shield 60 is suitably secured to the bracket 11 and the arms 18, 19 and 20 mounted thereon. The outer brake shoes 22 are provided with inwardly extending segmental plates 61, and the dust shield 60 has riveted thereto plates 62 having off-set portions 63 forming slots or recesses. These segmental plates are suitably lined with leather linings 64, 65 or any other noise-deadening lining. By means of the above construction the brake shoes are more or less guided in their movements, and noise due to lateral vibration is prevented. The spring 56 is always under tension and holds the upper brake shoe yieldingly in engagement with the adjustable stop 58, and thus provides an additional means for preventing rattling of the upper brake shoe.

It is obvious that various changes may be made in the details of construction without departing from the spirit of this invention, and it is therefore to be understood that this invention is not to be limited to the specific constructions shown.

What I claim is:

1. In a brake mechanism, the combination with a brake drum, of a brake band coöperating therewith, said brake band comprising a pair of brake shoes, a spring engaging one of the brake shoes near its middle point and operating to move it away from the drum, and an adjustable stop to limit the movement of the shoe.

2. In a brake mechanism, the combination with a brake drum, of a brake band coöperating therewith, said brake band comprising a pair of brake shoes, a bracket overhanging one of the shoes near its center, a bolt connected with the shoe and passing through the bracket, a spring on the bolt operating to move the band away from the drum, and an adjustable stop mounted in the bracket to limit the movement of the shoe.

3. In a brake mechanism, the combination with a support and a relatively rotatable braking surface adjacent thereto, of upper and lower brake shoes pivoted to said support, means for applying the shoes to the braking surface, a spring for withdrawing the upper shoe from said surface, and an adjustable stop independent of said means for limiting the withdrawing action of the spring.

4. In a brake mechanism, the combination with a support, a relatively rotatable brake drum, a brake shoe pivoted to the support in operative relation with said drum, and means for applying said brake shoe, of a plate secured to said shoe and extending toward the support, separated plates attached to said support and forming a slot in which said first plate engages, and noise deadening linings on one of said plates.

5. In a brake mechanism the combination with a brake drum, of a brake band cooperating therewith, an anchor for said

band, and an anti-rattling device engaging said band at a point removed from said anchor.

6. In a brake mechanism, the combination with a brake drum, of a brake band cooperating therewith, an anchor for said band, a lug on said band at a point removed from said anchor, and a socket engaged by said lug and coöperating therewith to form an anti-rattling device.

7. In a brake mechanism, the combination with a brake drum, of a brake band shoe coöperating therewith, an anchor for pivotally supporting said shoe at one end, a lug on said shoe near its free end, and a coöperating socket for said lug.

8. In a brake mechanism, the combination with a brake drum, of a brake band coöperating therewith, an anchor for said band, an inwardly extending lug on said band at a point removed from said anchor, and a lined socket coöperating with said lug.

9. In a brake mechanism, the combination with a brake drum, of a pair of brake shoes coöperating therewith, a support for anchoring said shoes at one end, lugs on one of said shoes, and sockets on said support coöperating with said shoes to form an anti-rattling device.

10. In a brake mechanism, the combination with a brake drum, of a brake band cooperating therewith, said brake band comprising a pair of brake shoes, an anchor for said shoes, a bracket overhanging one of said shoes at a point removed from said anchor, a spring to move said shoe away from said drum, and an adjustable stop on said bracket engaging said shoe.

11. In a brake mechanism, the combination with a brake drum, of upper and lower brake shoes coöperating therewith, anchoring means for pivotally supporting said brake shoes at one end, means engaging the other ends of said brake shoes for moving them into and out of engagement with said brake drum, and an adjustable abutment engaging the upper shoe so as to limit its movement away from the drum.

In testimony whereof I affix my signature in presence of two witnesses.

RUSSELL HUFF.

Witnesses:
C. I. Dale,
E. N. Hearn.

R. HUFF.

HYDROCARBON MOTOR.

APPLICATION FILED JULY 26, 1909.

1,259,988. Patented Mar. 19, 1918.

4 SHEETS—SHEET 1.

Fig. 1.

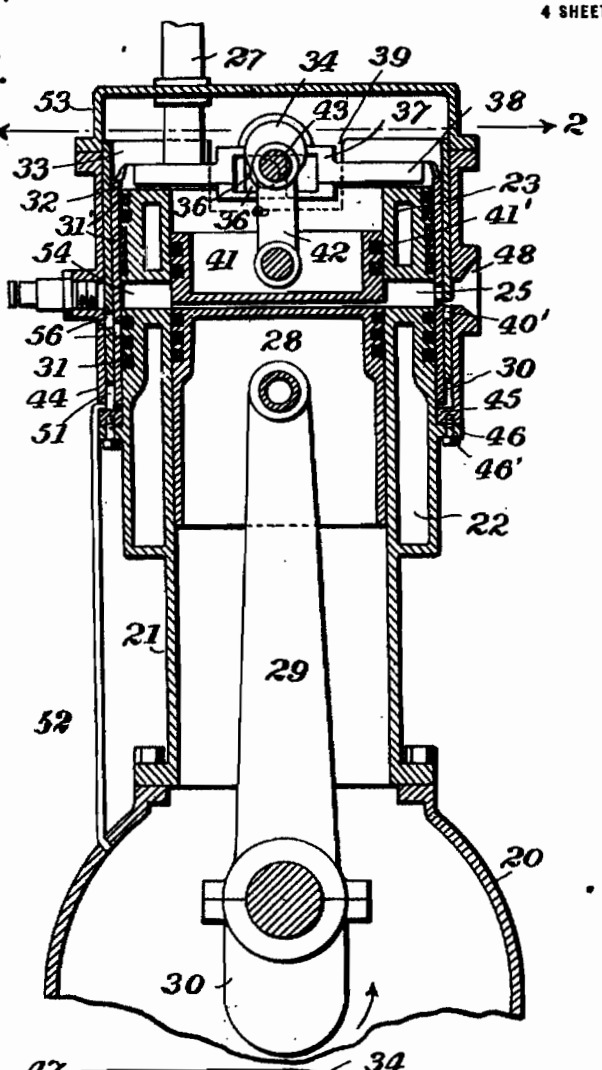

Fig. 2

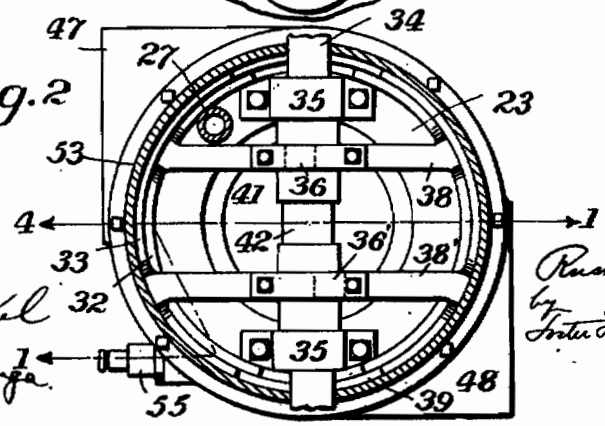

Witnesses

J. G. Stinkel

J. H. Bruninga.

Inventor

Russell Huff

by Foster Freeman Watson & Coit

Attorneys

R. HUFF.

HYDROCARBON MOTOR.

APPLICATION FILED JULY 26, 1909.

1,259,988.

Patented Mar. 19, 1918.

4 SHEETS—SHEET 2.

Fig. 3.

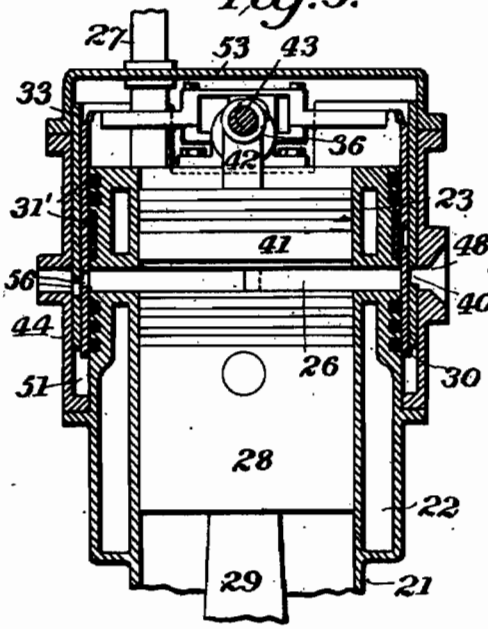

Fig. 4.

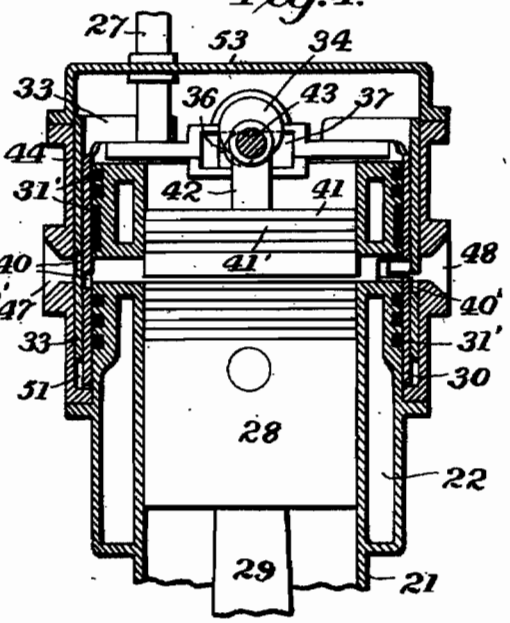

Fig. 5.

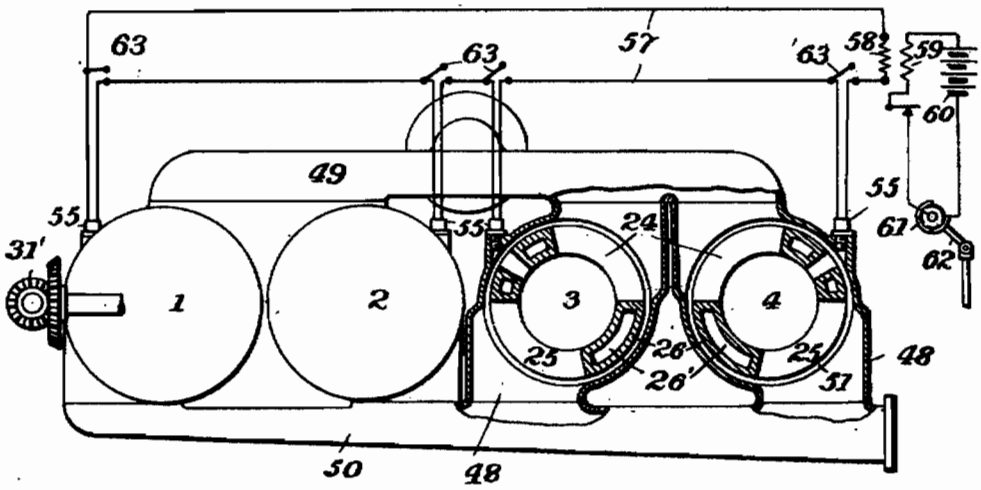

Witnesses

J. G. Stinkel

J. H. Bruninga

Inventor

Russell Huff

by Foster Freeman Watson & Coit.

Attorneys

R. HUFF.

HYDROCARBON MOTOR.

APPLICATION FILED JULY 26, 1909.

1,259,988.

Patented Mar. 19, 1918.

4 SHEETS—SHEET 3.

Fig. 6.

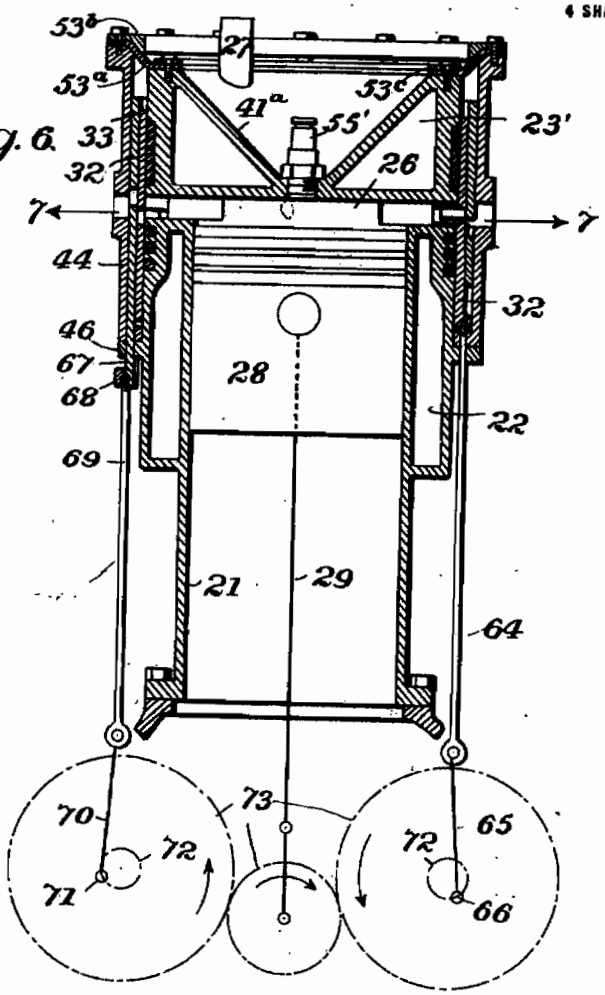

Fig. 7

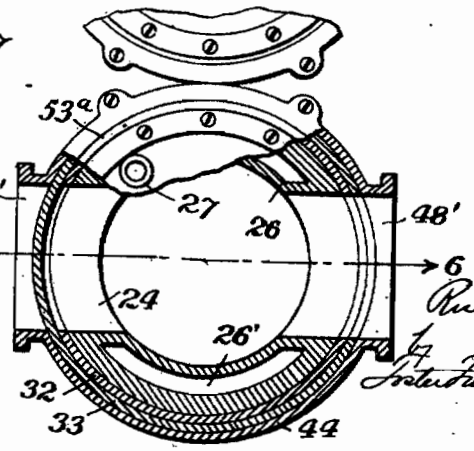

Witnesses

J. G. Stinkel

J. H. Bruninga

Inventor

Russell Huff

by Foster Freeman Watson & Coit

Attorneys

R. HUFF.

HYDROCARBON MOTOR.

APPLICATION FILED JULY 26, 1909.

1,259,988.

Patented Mar. 19, 1918.

4 SHEETS—SHEET 4.

Fig. 8.

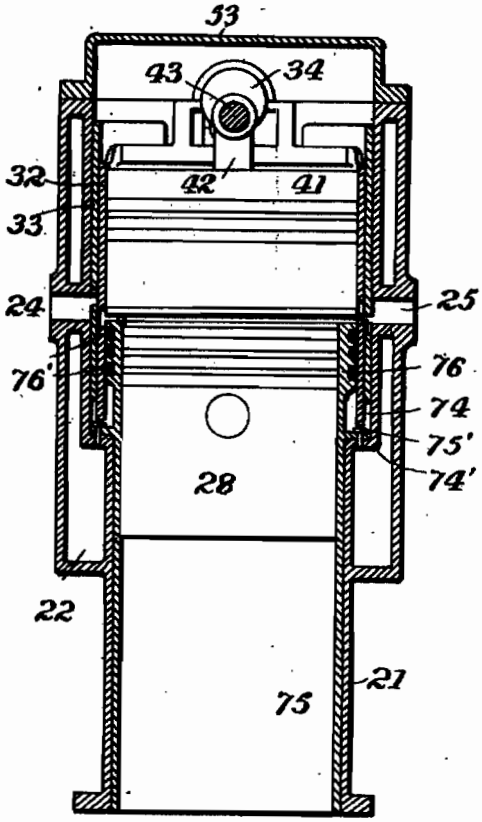

Fig. 9.

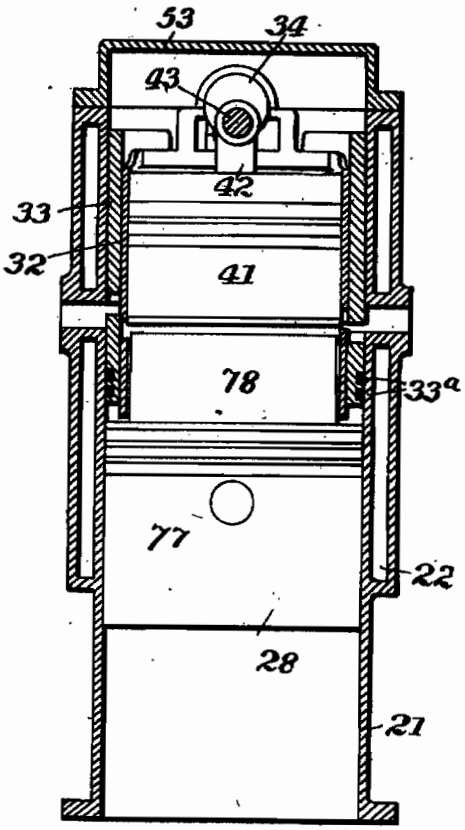

Witnesses

J. G. Stinkel

J. N. Bruninga.

Inventor

Russell Huff

by Foster Freeman Watson & Coit

Attorneys

UNITED STATES PATENT OFFICE.

RUSSELL HUFF, OF DETROIT, MICHIGAN, ASSIGNOR TO PACKARD MOTOR CAR COMPANY OF DETROIT, MICHIGAN, A CORPORATION OF MICHIGAN.

HYDROCARBON-MOTOR.

1,259,988. Specification of Letters Patent. Patented Mar. 19, 1918.

Application filed July 26, 1909. Serial No. 509,594.

To all whom it may concern:

Be it known that I, RUSSELL HUFF, a citizen of the United States, and resident of Detroit, county of Wayne, State of Michigan, have invented certain new and useful improvements in Hydrocarbon-Motors, of which the following is a specification.

This invention relates to engines and in particular to engines of the slide valve type. The invention is shown as applied to hydrocarbon engines but certain features are useful when used in engines of other types.

In engines of the valve sleeve type as heretofore constructed one or more valve sleeves slide inside of the cylinder and the piston slides in the sleeve or sleeves.

The valve sleeve or sleeves are thus subjected to the side thrust of the piston causing wear and twisting and straining of the valve sleeves.

One of the objects of this invention is to arrange the valve sleeves so that they are free from the side thrust of the piston.

Another object is to provide a movable head or exhaust plunger which will aid to clear the cylinder of the exhaust gases.

Another object is to construct the cylinder and cylinder head as one structure and thus dispense with the external or broken connections between the jackets in the cylinder and in the head.

Another object is to provide a simple and compact mechanism for operating the valve sleeves and provide a housing therefor.

Another object is to locate and construct the exhaust ports of the cylinders of a multi-cylinder engine so that the exhaust of one cylinder will not interfere with the exhaust of another.

Another object is to locate the spark plugs so that they are easily accessible.

Another object is to provide a novel ignition system in which the spark plugs for the individual cylinders are connected in series and in which the timing of ignition is controlled by parts in the valve sleeve or sleeves.

Other objects will appear in the detailed description.

In the drawings,

Figure 1 is a vertical section on the line 1—1, Fig. 2, showing the piston and other working parts in upper dead center position of the exhaust stroke.

Fig. 2 is a section on the line 2—2 of Fig. 1.

Fig. 3 is a section on the line 1—1, Fig. 2, showing the piston and the other working parts in upper dead center position of the compression stroke.

Fig. 4 is a section on the line 4—1, Fig. 2, showing the piston and the other working parts in upper dead center position of the exhaust stroke.

Fig. 5 is a plan view of a four-cylinder engine showing the ignition system, and the cylinders 3 and 4 being shown in section.

Fig. 6 which shows another form of this invention is a vertical section on the line 6—6, Fig. 7, showing the piston and the other working parts in the upper dead center position of the exhaust stroke.

Fig. 7 is a section on the line 7—7, Fig. 6.

Fig. 8 is a vertical section showing a third form of this invention.

Fig. 9 is a vertical section showing a fourth form of this invention.

Referring to the drawings, 20 designates the crank case to which is bolted the cylinder 21. The cylinder is provided with a water jacket 22 and the head of the cylinder which is cast integral with the cylinder body is provided with a water jacket 23. The cylinder walls are provided with an inlet port 24 and an exhaust port 25. The head and body of the cylinder are connected by cored connections 26 which are provided with communicating ducts 26′ connecting the water jackets 22 and 23. The water circulates through the jackets at 22, 23 and discharges into a pipe 27 leading to the radiator and circulating pump. A piston 28 works in the cylinder and is provided with a connecting rod 29 connected to a crank 30.

The upper section 31 of the cylinder and head is machined and ground and provided with packing rings 31′. A pair of superposed valve sleeves 32, 33 slide on the ground surface 31 of the cylinder. A valve or eccentric shaft 34 is mounted in bearings 35 at the upper end of the cylinder head and is operated from the crank shaft through the usual 2 to 1 gearing 35′. The valve shaft is provided with a pair of eccentrics having cranks 36, 36′ which are angularly displaced approximately 80 degrees, the eccentric 36 for the inner sleeve being in advance of the eccentric 36′ for the outer sleeve. These

eccentrics are connected to blocks 36ª which slide in slideways 37 in the cross bars 38, 38′, formed integral with or otherwise secured to the valve sleeves 32, 33. The valve sleeves are cut away at 39 to clear the valve shaft 34 and are provided with inlet ports 40 and exhaust ports 40′, which coöperate with the inlet and exhaust ports in the cylinder walls.

The operation of these valves will be obvious from the drawings. The inlet and exhaust ports in the valve sleeves and cylinder coöperate at proper times in the cycle of operations of the engine. By placing the valve shaft at the head of the cylinder and connecting the eccentrics with the cross bars by the sliding connection, a direct pull is exerted upon the valve sleeves and thus all twisting and straining is obviated.

A movable exhaust plunger or head 41 is provided with packing rings 41′ and slides in the cylinder head and is actuated from an eccentric or crank 43 on the valve shaft through a connecting rod 42. The plunger is shown in two extreme positions in Fig. 1 and Fig. 3. During the exhaust stroke of the piston, the plunger moves downwardly and aids to clear the cylinder of the exhaust gases. During the compression stroke and at the beginning of the ignition, the plunger is at its upper extreme position and forms an explosion chamber of relatively large area. This operation of the plunger is obtained by operating it from the 2 to 1 valve shaft 34.

The valve sleeves are inclosed by a casing 44 which is provided with a flange 45 bolted to an annular flange or projection 46 by means of bolts 46′. This casing has formed thereon an inlet port 47 and an exhaust port 48, which ports aline with the ports in the cylinder and which are provided with suitable flanges for attachment to the inlet pipe or manifold 49 and exhaust pipe or manifold 50. The casing thus forms an annular space 51 forming the valve chamber. A vent or drip pipe 52 connects the lower part of the valve chamber 51 with the crank case 20. Since the valve sleeve eccentrics are spaced less than 180 degrees apart, the pressure in the lower part of the valve chamber will vary and therefore it is necessary that a vent be provided. The oil which accumulates in the bottom of the valve chamber passes through the vent and drip pipe 52 to the crank case. A cap 53 is bolted to the casing 44 and incloses the valve shaft and its connections which are located at the head end of the cylinder.

The cylinder wall is provided with a spark port 54 and a spark plug 55 is suitably secured to the casing 44, as shown in Figs. 1 and 5. The valve sleeves are provided with spark ports 56 which aline with the port 54 located in the cylinder wall at a predetermined time during the operation of the engine. Connections 57 connect the spark plugs 55 in series with the secondary 58 of the transformer or induction coil, the primary 59 of which is connected in series with a battery or magneto 60 and the commutator 61, and the usual adjusting arm 62 is provided which is connected to the governor and varies the time of ignition of the charge. Suitable switches 63 are provided which bridge the spark plugs so as to cut them out and permit the testing of the separate cylinders.

As shown particularly in Fig. 5, the ports 24, 25, are arranged opposite each other and diagonally, so that ports 24 in cylinders 1 and 2 open diagonally toward each other, and the same is true of ports 24 in cylinders 3 and 4. The exhaust ports of cylinders 1 and 2 open diagonally away from each other, and the same is true of the exhaust ports of cylinders 3 and 4. This arrangement of ports has several advantages in the present engine. As is well known in the art, in a multi-cylinder motor the exhaust port of each cylinder is usually opened when the piston is about two-thirds of the way down on its working or firing stroke and is not closed until the piston reaches the upper dead center of its exhaust stroke. Therefore, in a four-cylinder motor with the cylinders firing 1, 2, 4, 3, the exhaust port of cylinder 2 will open before the exhaust port of cylinder 1 has closed, and it is found in practice that if these ports are arranged to enter the exhaust manifold at contiguous points, the exhaust gases from cylinder 2 will be blown directly into cylinder 1, from which the exhaust gases have been very nearly expelled. The exhaust valve of cylinder 1 then closes immediately and retains some of the burnt gases which entered it from cylinder 2, and hence the efficiency of the engine is impaired. It is found that if the exhaust from these contiguous cylinders is separately conveyed away, the above undesirable results are overcome. Thus by separating the exhaust ports of cylinders 1 and 2, as shown in Fig. 5, this objection is overcome. As cylinder 3 immediately follows cylinder 4 in firing, it is also necessary to separate these exhaust ports, but as cylinder 2 never immediately follows 3 in firing, or vice versa, the exhaust ports of these cylinders may be arranged contiguous.

In the present invention there is another advantage from the diagonal arrangement of the ports as shown. With these ports arranged at right angles to the plane of the center lines of the cylinders, there would be no space between the ports for the insertion of the spark plug except in the end cylinders, but by arranging the ports diagonally the space between the ports is moved around so that a spark plug may be arranged in the

space in the side of the cylinder and be accessible from one side of the motor, as shown in Fig. 5. In the present invention this spark plug has been arranged in the side of the cylinder for two purposes. First, because it would be inaccessible if placed in the movable head 41, and, second, because it is desired to simplify the ignition system by arranging all four spark plugs in series with the secondary of the transformer or induction coil, whereby each spark plug will produce four sparks during a complete cycle of the motor. Since the valve sleeves are provided with suitable ports which coöperate with the spark port in the cylinder wall, the spark plug will be placed in communication with the interior of the cylinder at the proper firing moment, whereby only one of said four sparks will be operative in the cylinder. Thus the sleeves act in the nature of a distributer and the usual distributer and all but one of the high tension wires may be dispensed with.

The spark plug 55 may be of the type illustrated in patent to Roche No. 724,945, dated April 7, 1903, this spark plug being screwed into the casing 44 which has formed therein a spark plug chamber alined with the spark port 54 in the cylinder wall. It is not necessary that this sparking device be of the high tension jump spark type, since it is possible to use a make and break device.

Referring to Figs. 6 and 7 which show another form of this invention, the cylinder 21 and head 41ª are cast in a single piece, the cylinder head being cored to provide a water jacket 23′ which communicates with the water jacket 22 in the cylinder, by means of the ducts 26′ in the connections 26. The valve sleeve 32, is operated by means of a sliding rod 64 connected to an eccentric 66 by means of the connecting rod 65. The outer valve sleeve 33 is provided with an extension 67 which is connected to a rod 69 by means of the reinforced piece 68. The rod 69 is operated from the eccentric 71 by means of a connecting rod 70. The eccentrics 66 and 71 are mounted upon the eccentric shafts 72 which are driven from the crank shaft by means of the usual 2 to 1 gearing 73. The casing 44 is provided with an inlet port 47′ and an end exhaust port 48′. The ports in this type of invention are placed at right angles to the center line of the cylinder since the spark plug 55′ may be placed in the head 41ª of the cylinder. The casing 44 is connected to the cylinder head by means of a cap 53ª of flexible material which is secured to the casing and the head by means of clamping rings 53ᵇ, 53ᶜ, respectively. By means of this construction the cylinders may be placed close together, as shown in Fig. 7.

The operation of this form is similar to the operation of the form shown in Figs. 1 to 4 inclusive. The piston and the other working parts are shown in the upper dead center position of the exhaust stroke. Although the operating mechanism is shown as mounted below the cylinder, it is obvious that this mechanism may be located at the head end of the cylinder, as in the form shown in Figs. 1 to 4 inclusive.

Referring to Fig. 8 which shows a third form of this invention, the cylinder is provided with an enlarged annular portion or recess 74 which forms a stop shoulder 74′. The cylinder is provided with a lining 75 which has formed thereon an annular flange or projection 75′, which abuts against the shoulder 74′ and is adapted to be secured to the cylinder by means of bolts, as shown. The lining is provided with the head or section 76 provided with packing rings 76′. This section terminates at substantially the line of the inlet and exhaust ports which are formed in the cylinder walls. The annular recess and the head 76 form the valve chamber 51 in which reciprocate the valve sleeves 32, 33, which are provided with the usual inlet, exhaust and spark ports and which are operated by mechanism placed at the head end of the cylinder, as in the construction shown in Figs. 1 and 3. In this form of invention the exhaust plunger or head 41 slides inside of the valve sleeves.

In this form of invention the valve sleeves are located between the cylinder lining and the water jacket. Since this lining is rigidly supported against transverse movement, the side thrust of the piston will be taken up entirely by the cylinder walls and the lining, and will not be transmitted to the valve sleeves, and since these valve sleeves are operated by mechanism, the connections of which transmit the power by direct pull, all straining, twisting and wear of the valve sleeves is obviated. The operation of the valve sleeves is similar to that shown in Figs. 1 to 4 inclusive.

Referring to Fig. 9, which shows a fourth form of this invention, the valve sleeves 32 and 33 are mounted in the interior of the cylinder and the movable exhaust plunger or head is mounted in these sleeves, as in the construction shown in Fig. 8. The piston 77 is provided with a reduced portion 78 which is of slightly less diameter than the internal diameter of the inner valve sleeve 32. The outer valve sleeve is provided with the usual packing rings 33ª. By means of the above construction, the side thrust of the piston is transmitted wholly to the walls of the cylinder and not to the superposed valve sleeves 32, 33. The mechanism for operating the valve sleeves is similar to that shown in Figs. 1 to 4 inclusive.

In all of the above forms the invention is shown as applied to a hydrocarbon en-

gine. Various features of this invention may however be applied to other types of engines, for instance, to steam engines. It is also to be understood that this invention is not to be limited to a plurality of superposed sleeves since it is possible to operate an engine of this type with the single sleeve and with a plurality of sleeves which are not superposed.

It is further obvious that various changes may be made in the details of construction without departing from the spirit of this invention and it is therefore to be understood that this invention is not to be limited to the specific construction shown and described.

Having described my invention what I claim is:

1. In a hydrocarbon motor, the combination of a cylinder, a working piston therein, a pair of coöperating valve sleeves guided by the cylinder, a plunger at the head end of said cylinder and slidable in one of the sleeves, revoluble means arranged at the head end of the cylinder and operated by the crank shaft of the engine for actuating said sleeves and for moving the head toward the piston on the exhaust stroke and away from the piston on the compression stroke, and a cap carried by the cylinder and inclosing said means.

2. In an engine, the combination with a cylinder provided with an enlarged portion forming a shoulder, of a cylinder lining provided with an annular flange intermediate its ends adapted to engage the shoulder and forming a valve chamber between the outside of the lining and the enlarged portion.

3. In a hydrocarbon engine, the combination with a cylinder having a cylinder head and ports, of a piston working therein, an exhaust plunger working in the cylinder head, and a plurality of superposed valve sleeves, between the cylinder and plunger.

4. In a hydrocarbon engine, the combination with a cylinder having a cylinder head and ports, of a piston working therein, an exhaust plunger working in the cylinder head and all parts of which are located in front of the head of the piston, a valve sleeve between the cylinder and plunger, and mechanism for operating the piston and plunger in timed relation so that the clearance is a minimum during exhaust and a maximum during the compression and ignition.

5. In a hydrocarbon engine, the combination with a cylinder having a cylinder head and ports, of a piston working in the cylinder, a lining for the cylinder, the wall of the cylinder being provided with an annular recess forming with the lining, a valve chamber, a valve sleeve working in the valve chamber and extending into the cylinder head, and a plunger working in the head end of the valve sleeve.

6. In a hydrocarbon engine, the combination with a cylinder having a cylinder head and ports, of a piston working in the cylinder, a lining for the cylinder, the wall of the cylinder being provided with an annular recess forming with the lining a valve chamber, a valve sleeve working in the valve chamber and extending into the cylinder head, a plunger working in the head end of the valve sleeve, and mechanism mounted at the head end of the cylinder for operating the sleeve and plunger in timed relation.

7. In an engine of the class described, the combination of a cylinder, a liner therefor having its lower end in engagement with said cylinder, said cylinder being spaced therefrom above, a valve mechanism comprising a sleeve surrounding said liner within said space, and means for operating said valve sleeve.

8. In an engine of the class described, the combination of a cylinder, a liner therefor having at its lower end a fluid tight connection with said cylinder, said cylinder being spaced therefrom above, a valve mechanism comprising a sleeve surrounding said liner within said space, means for reciprocating said sleeve, and means for admitting lubricant to said space.

9. In an engine of the class described, the combination of a water jacketed cylinder, a liner therefor, a piston operating in said cylinder, a cylinder head separate from said liner and having water connections with said cylinder a plurality of valve sleeves out of contact with said piston, and means for operating said sleeves.

10. An internal combustion engine having a cylinder, open at both ends, a working piston slidable in the cylinder, a plunger slidable in an end of the cylinder toward and from the piston, ports in the cylinder, a sleeve valve controlling said ports and projecting above the last mentioned cylinder end, a cross bar carried by the corresponding end of the sleeve, a revoluble shaft located above the said ends, eccentric means connecting the shaft and bar, whereby the sleeve valve is operated, and means connecting the said shaft and plunger and operable to move the plunger toward the piston when the piston is making an exhaust stroke.

11. An internal combustion engine having a cylinder, a working piston slidable in the cylinder, ports in the cylinder, a sleeve valve controlling said ports and projecting above the end of the cylinder, a bar extending across the corresponding end of the sleeve, a revoluble shaft located above the said end, and eccentric means connecting the bar and shaft, whereby the sleeve valve is operated.

12. An internal combustion engine having a cylinder, a working piston slidable in the cylinder, ports in the cylinder, a sleeve valve controlling said ports and projecting above the end of the cylinder, a bar extending

across the corresponding end of the sleeve, a revoluble shaft located above the said end, eccentric means connecting the shaft and bar whereby the sleeve is operated and a cap carried by the cylinder and inclosing the sleeve actuating parts.

13. An internal combustion engine comprising a cylinder, a piston slidable in the cylinder, ports in the cylinder, a plurality of sleeve valves controlling said ports, each sleeve projecting above the end of the cylinder, a bar extending across the end of each sleeve, a revoluble shaft located above the bars, and eccentric means connecting each bar and the shaft whereby the sleeves are actuated.

14. In an internal combustion engine, the combination of a cylinder having its bore enlarged adjacent the head end, a liner seated in the small bore and extending into the larger bore thereby forming an annular space, a piston operable in said liner, a sleeve valve located in said space, a plunger working in said sleeve and above the end of the liner, and means arranged at the end of the cylinder for actuating said sleeve and moving the plunger toward the piston when it is making an exhaust stroke.

15. An internal combustion engine having a cylinder, a working piston slidable in the cylinder, ports in the cylinder, a sleeve valve controlling said ports and projecting above the end of the cylinder, a bar extending across the projecting end of the sleeve, a shaft operatively connected with said piston, and angularly movable means operated by said shaft connected to said bar, whereby said sleeve valve is operated.

16. An internal combustion engine having a cylinder, a working piston slidable in the cylinder, ports in the cylinder, sleeve valves controlling said ports and projecting above the end of the cylinder, bars extending across the projecting ends of the sleeves, a shaft operatively connected with said piston, and angularly movable means operated by said shaft connected to said bars whereby said sleeve valves are operated.

17. An internal combustion engine having a cylinder, a working piston slidable in the cylinder, a crank shaft connected with the piston, ports in the cylinder, a pair of sleeve valves controlling the ports, and means for actuating the said valves from the crank shaft including a connection to one sleeve arranged on one side of the axis of the sleeves and a connection to the other sleeve arranged on the opposite side of said axis.

In testimony whereof I affix my signature in presence of two witnesses.

RUSSELL HUFF.

Witnesses:
C. I. Dale,
E. N. Hearn.

Correction in Letters Patent No. 1,259,988.

It is hereby certified that in Letters Patent No. 1,259,988, granted March 19, 1918, upon the application of Russell Huff, of Detroit, Michigan, for an improvement in "Hydrocarbon-Motors," an error appears in the printed specification requiring correction as follows: Page 4, line 109, claim 10, and line 122, claim 11, and page 5, line 1, claim 12, for the word "corresponding" read *projecting;* and that the said Letters Patent should be read with this correction therein that the same may conform to the record of the case in the Patent Office.

Signed and sealed this 30th day of April, A. D., 1918.

[SEAL.] F. W. H. CLAY,

Acting Commissioner of Patents.

Cl. 123--75.

R. HUFF.

HYDROCARBON MOTOR.

APPLICATION FILED JULY 26, 1909.

1,339,512. **Patented May 11, 1920.**

2 SHEETS—SHEET 1.

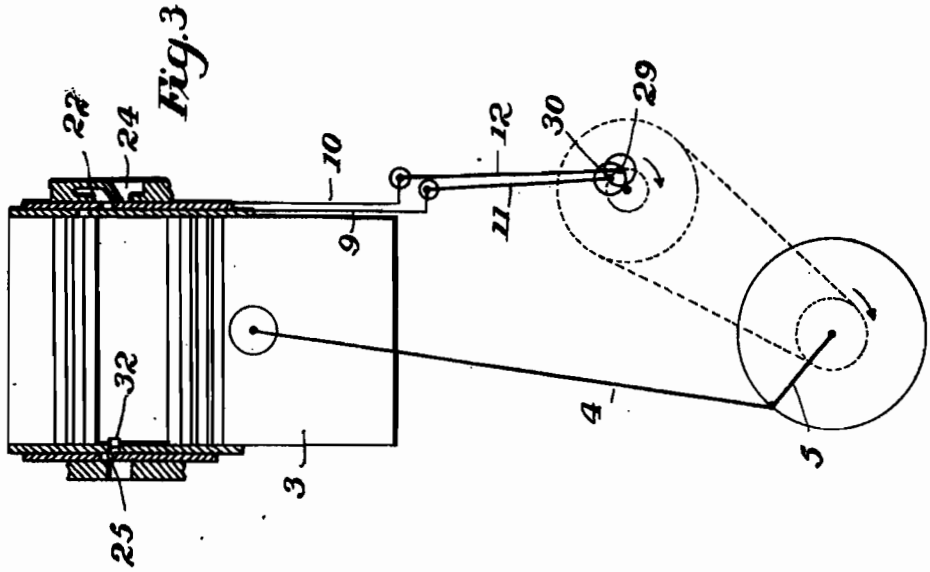

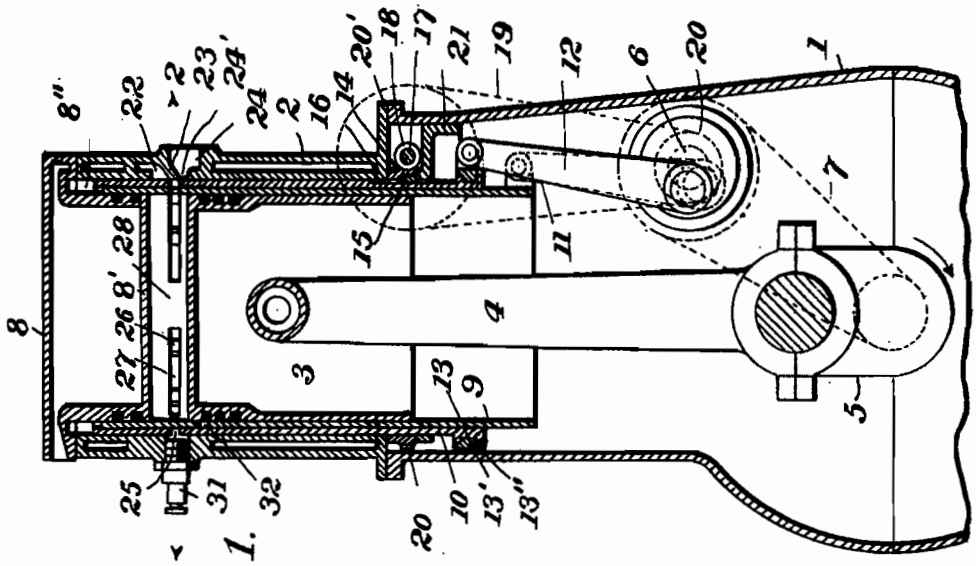

Fig. 1.

Witnesses

J. G. Stinkel

J. H. Brunings

Inventor

Russell Huff

by Foster Freeman Watson & Coit

Attorneys

R. HUFF.

HYDROCARBON MOTOR.

APPLICATION FILED JULY 26, 1909.

1,339,512. **Patented May 11, 1920.**

2 SHEETS—SHEET 2.

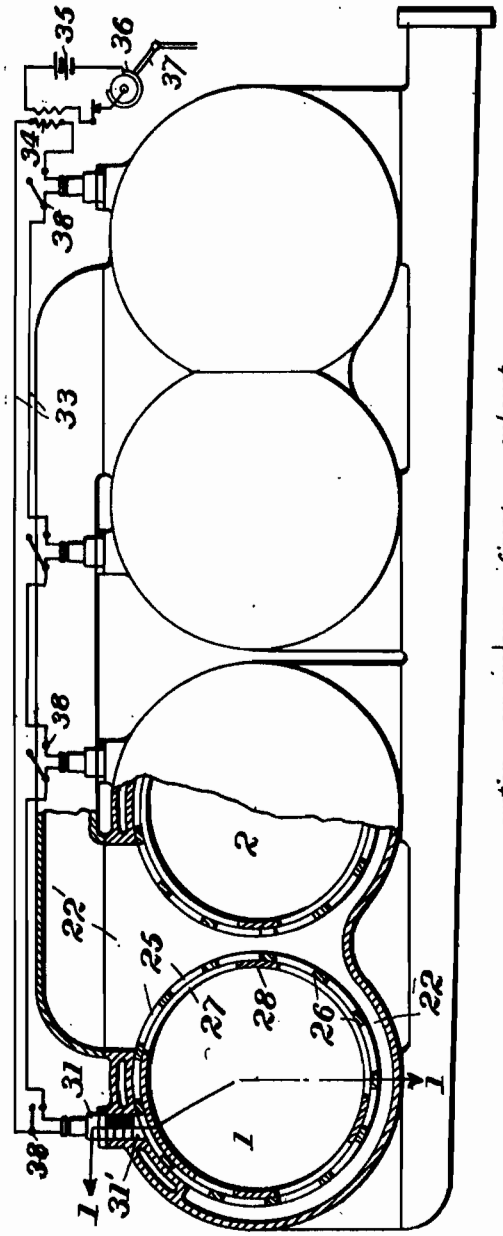

Fig. 2.

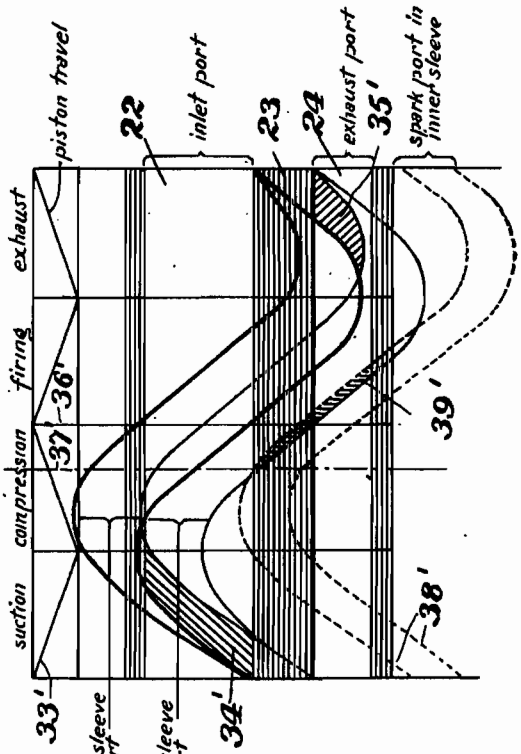

Fig. 4.

Witnesses

J. G. Stinkel

J. H. Bruninga.

Inventor

Russell Huff

by Foster Freeman Watson & Coe

Attorneys

UNITED STATES PATENT OFFICE.

RUSSELL HUFF, OF DETROIT, MICHIGAN, ASSIGNOR TO PACKARD MOTOR CAR COMPANY, OF DETROIT, MICHIGAN, A CORPORATION OF MICHIGAN.

HYDROCARBON-MOTOR.

1,339,512. Specification of Letters Patent. Patented May 11, 1920.

Application filed July 26, 1909. Serial No. 509,595.

To all whom it may concern:

Be it known that I, RUSSELL HUFF, a citizen of the United States, and resident of Detroit, Wayne county, State of Michigan, have invented certain new and useful Improvements in Hydrocarbon-Motors, of which the following is a specification.

This invention relates to engines and in particular to engines of the sleeve valve type. The invention is shown as applied to hydrocarbon engines, although certain features may be applied to engines of other types.

In engines of the sleeve valve type, in which the ports of the cylinder are controlled by one or more sleeve valves it is difficult to lubricate the sleeves.

One of the objects of this invention is to provide means whereby the lubrication of the sleeves may be facilitated.

Another object is to improve the construction and arrangement of the ports in the cylinder walls and sleeves.

Another object is to improve the ignition system.

Other objects will appear from the detail description and the accompanying drawings which are illustrative of one form of the invention, it being understood that the details shown and described may be modified in various ways within the scope of the claims wherein the invention is defined.

In the drawings,

Figure 1 is a vertical section along the line 1—1, Fig. 2, showing the piston and the working parts in upper dead center position of the exhaust stroke.

Fig. 2 is a plan view of a four-cylinder engine, the cylinders 1, 2, being shown partially in section taken on the line 2—2, Fig. 1.

Fig. 3 is a diagrammatic view showing the piston and valve sleeves completing the compression stroke.

Fig. 4 is a diagram showing the port openings of the engine.

In the embodiment of the invention shown in the drawings, a cylinder is employed having inlet and exhaust ports which are controlled by a valve mechanism including a sleeve or pair of superposed sleeves. The sleeve or sleeves are preferably located in the cylinder and when two are used the piston may slide in the inner one. The cylinder wall is provided with ports separated by a bridge or partition and one of the valve sleeves (the outer sleeve in the drawing) has a port which is substantially equal in width to the width of the bridge separating the cylinder wall ports. An ignition port may be located in the cylinder wall so that the port in said sleeve will successively aline with the inlet ignition and exhaust ports. The other or inner sleeve is provided with two ports, as shown.

The valve mechanism is so operated that the cylinder inlet port is open to the combustion space on the suction stroke of the piston, both the inlet port and the cylinder exhaust port are closed to the combustion space on the compression and firing strokes, and the exhaust port is open on the exhaust stroke of the piston, and during this operation the sleeve (or sleeves) of the valve mechanism moves in a direction to cause its port to cross the cylinder exhaust and intake ports in succession.

In the invention, as shown, the sleeves are reciprocated and in addition to this longitudinal movement, one of them, preferably the outer sleeve, is arranged to be moved about its axis. The connection between such sleeve and the eccentric that reciprocates it is of such form as will permit the sleeve to be partly rotated during each stroke of the piston, and the sleeve is so connected to its rotating device that it may slide longitudinally during its rotation and the rotating device may be detached from the sleeve by a relative axial movement. This movement of one of the sleeves tends to aid in distributing the lubricant over its surface.

Referring to the drawings, 1 indicates the engine base or crank case to which is bolted the cylinders 2. A piston 3 is arranged in each of the cylinders and is connected to the crank shaft 5 by means of the connecting rod 4. A valve shaft 6 is driven from the crank shaft by means of a chain connecting the 2 to 1 chain wheels on the crank and valve shafts respectively. The cylinder head 8 is provided with an inward extension 8′, of smaller diameter than the cylinder, forming an annular valve chamber 8″. A cylindrical member or sleeve 9 is arranged within the cylinder and extends from the inward extension 8′ of the head

downwardly into the crank case forming the slideway for the piston. A cylindrical member or sleeve 10 is arranged between the sleeve 9 and the cylinder wall. The upper ends of the sleeves 9 and 10 are shown as arranged in the space 8″, the sleeves being movable relatively to each other and relatively also to the cylinder, the cylinder head and the piston. The inner member or sleeve 9 is connected to an eccentric on the valve shaft, by means of a connecting rod 11, by which it is reciprocated.

The outer member or sleeve is reciprocated or moved axially and about its axis by suitable devices which comprise a connecting rod 12, actuated by an eccentric on the valve shaft 6, and a gear ring 14 actuated by a worm 18 on a shaft 17 which is driven from the valve shaft, as by a chain 19 and chain wheels 20 and 20′ mounted on the shafts 6 and 17 respectively. The connecting rod 12 has its upper end connected with a ring 13′ having a tongue 13″ arranged in a circumferential groove in the lower end of the sleeve 10, this construction permitting the movement of the sleeve, about its axis, relative to the ring. The ring 14 surrounds the sleeve 10 and is provided with a key or projection 15 which engages a keyway or slot 16 in the sleeve, the ring being mounted between the cylinder and a bracket 21 secured to the crank case and being thus retained against endwise movement. This construction permits the ring 14 to be detached from the outer sleeve, after the cylinder 2 has been removed, by moving the ring axially relative to the sleeve.

The cylinder is provided with inlet and exhaust ports 22, 24, which are separated by a bridge or partition 23. The inlet and exhaust ports extend nearly around the cylinder and the inlet passage 22′ is common to the cylinders as clearly shown in Fig. 2. The outer valve sleeve is provided with a port or series of ports 25 which are shown as extending substantially around the sleeve, the upper and lower sections of the sleeve being connected by ribs 26. The inner valve sleeve is provided with a port 27 which performs the function of an inlet and exhaust port, and which extends nearly around the cylinder, the sections of the sleeve being connected by ribs 28. An ignition device, in this case a spark plug 31, is screwed into the cylinder wall, as shown in Figs. 1 and 2 forming what may be termed an ignition port 31′. The inner sleeve is provided with an ignition port 32 which is adapted to aline with the ignition port 31′ and the port 25. The width of the ports in the sleeve is substantially equal to the width of the partition or bridge 23 so that the port 25 successively alines with the inlet ignition and exhaust ports. The eccentrics 29 and 30, for operating the outer and inner sleeves are placed about 30° apart, the eccentric 29 leading.

During the operation of the engine, the sleeves are reciprocated by means of the eccentrics 29 and 30 and the outer sleeve is moved about its own axis or rotated by means of the worm engaging the teeth on the ring which is splined on the sleeve. The ignition port 31′ is located in the same zone as the partition 23 and since the width of the ports in the sleeves is substantially the same as the width of the partition or bridge 23, the distance between the ribs 26 must be less than the distance between the ignition port 31′ and the passage 22′ in order to cut off the inlet port from the ignition port and thus prevent premature explosion.

The ignition devices or spark plugs 31 are connected in a series circuit by electrical connections 33 with the secondary of the induction coil or transformer 34. In case an induction coil is used, the primary is connected in circuit with a battery 35 and a commutator 36. An arm 37 connected to the governor mechanism controls the advance or retardation of the spark. Bridging switches 38 are provided which are adapted to bridge and cut out the individual spark plugs 31 for testing. The sparking devices and the spark ports are located on that side of the cylinder where the side thrust of the piston is the greatest during the firing stroke. In this way the valve sleeves are pressed against the ignition ports and form a tight joint permitting high compression and preventing escape of gases.

By referring to the diagram in Fig. 4, it will be more clearly understood how the various ports are opened and closed. The travel of the piston is indicated near the top of the figure by the zigzag line 33′ and the various positions of the ports at different times are indicated by the wavy lines. It will, of course, be understood that the size of the ports is considerably exaggerated in order to make the diagram clear. The cylinder inlet passage is represented at 22 in this figure and the exhaust passage at 24, while the partition between them is indicated at 23. From the diagram it will be seen that the ports of the sleeves are in register with the inlet passage 22 during the entire suction stroke of the piston, this port opening being indicated by diagonal lines 34′. The sleeves then go out of register as they both move downwardly during compression and firing stroke of the piston, the inner cylindrical member or sleeve thus closing the ports of the outer sleeve and protecting them from the heat of combustion, and the sleeve ports are brought into register again and into register with the exhaust passage 24 during the exhaust stroke of the piston, as indicated by the diagonal lines at 35′. The sleeve ports are fully in register as they pass upwardly

over the partition 23 and close the exhaust passage and open the inlet passage simultaneously.

Line 36′ represents the moment of ignition when the motor is running slowly, and the spark is advanced at high speeds to the point 37′, indicated in the diagram. The dotted lines 38′ represent the path of travel of the spark plug port 32 and it is noted that this port is in register with the port in the outer sleeve somewhat before and after the moment of ignition 36′ has passed, the outer sleeve being at this time in register with the spark plug. This spark plug is in communication with the interior of the cylinder during the time indicated by the vertical lines 39′. The position of the various ports at the high speed firing moment is illustrated in Fig. 3, showing both the inlet and exhaust passages closed and the spark plug in communication with the interior of the cylinder.

Although this invention is shown as applied to hydrocarbon engines, it is obvious that certain features may be applied to other types of engines. In the specific type of engine described, the valve mechanism comprises two superposed or telescoping valve sleeves. It is possible, however, to operate the engine with a single valve sleeve and it is therefore to be understood that this invention is not to be limited to a series of superposed or telescoping valve sleeves.

It is obvious that various changes may be made in detail of construction without departing from the spirit of this invention and it is therefore to be understood that this invention is not to be limited to the specific construction shown and described.

Having described my inventon what I claim as new and desire to secure by Letters-Patent is:

1. In an engine, in combination, a cylinder provided with inlet and exhaust ports, a piston working in the cylinder, a plurality of valve sleeves substantially concentric with the cylinder, each provided with a port arranged to coöperate with the inlet and exhaust ports.

2. In an engine, in combination, a cylinder provided with inlet and exhaust ports, a plurality of superposed valve sleeves working in the cylinder, a piston working in the valve sleeves, and a port in each of the valve sleeves arranged to coöperate with the inlet and exhaust ports.

3. In an engine, in combination, a cylinder provided with inlet and exhaust ports separated by a partition, a piston working in the cylinder, a plurality of superposed valve sleeves concentric with the cylinder, and ports in the valve sleeves arranged to cooperate with the inlet and exhaust ports, the width of the ports in the valve sleeves being substantially equal to the width of the partition.

4. In an engine, in combination, a cylinder provided with inlet and exhaust ports located one above the other and separated by a partition, a plurality of superposed valve sleeves working in the cylinder, a piston working in the valve sleeves, and ports in the valve sleeves arranged to coöperate with the inlet and exhaust ports, the width of the sleeve ports being substantially equal to the width of the partition.

5. In an engine, in combination, a cylinder provided with inlet and exhaust ports separated by a partition, a piston working in the cylinder, a plurality of superposed valve sleeves concentric with the cylinder, ports in the valve sleeves arranged to cooperate with the inlet and exhaust ports, the width of the ports in the valve sleeves being substantially equal to the width of the partition, and a pair of angularly displaced eccentrics for operating the sleeves.

6. In an engine, in combination, a cylinder provided with inlet and exhaust ports separated by a partition, a piston working in the cylinder, a plurality of superposed valve sleeves concentric with the cylinder, ports in the valve sleeves arranged to coöperate with the inlet and exhaust ports, the width of the ports in the valve sleeves being substantially equal to the width of the partition, and a pair of eccentrics for operating the sleeves, said eccentrics being angularly displaced substantially 30°.

7. In a hydrocarbon motor, the combination with a cylinder having inlet and exhaust ports arranged in different zones, and a working piston in said cylinder, of a pair of valve sleeves arranged one within the other and guided by said cylinder and each having a port adapted to register with both said cylinder ports.

8. In a hydrocarbon engine, in combination, a cylinder provided with inlet, exhaust and ignition ports, and valve mechanism including a valve provided with a port arranged to coöperate with said ports in a predetermined order.

9. In a hydrocarbon engine, in combination, a cylinder provided with inlet, exhaust and ignition ports, and valve mechanism including a valve sleeve substantially concentric with the cylinder and provided with a port arranged to coöperate with said ports in a predetermined order.

10. In a hydrocarbon engine, in combination, a cylinder provided with inlet, exhaust and ignition ports, valve mechanism including a valve sleeve substantially concentric with the cylinder and provided with a port arranged to coöperate with said ports in a predetermined order, and said valve mechanism being adapted to prevent communication between the ignition and the inlet ports.

11. In a hydrocarbon engine, in combina-

tion, a cylinder provided with inlet, exhaust and ignition ports, a valve sleeve arranged to open and close said ports in a predetermined order, and a second superposed valve sleeve coöperating with the first valve sleeve.

12. In a hydrocarbon engine, in combination, a cylinder provided with inlet, exhaust and ignition ports, a valve sleeve substantially concentric with the cylinder and provided with a port arranged to coöperate with said ports in a predetermined order, and a second superposed valve sleeve provided with a port arranged to coöperate with the inlet and exhaust ports and a second port arranged to coöperate with the ignition port.

13. In a hydrocarbon engine, in combination, a cylinder, inlet, ignition and exhaust ports located longitudinally of the cylinder in the order named, a valve sleeve arranged to open and close the ports in a predetermined order, and a second superposed valve sleeve arranged to coöperate with the first sleeve.

14. In a hydrocarbon engine, in combination, a cylinder, inlet, ignition and exhaust ports located longitudinally of the cylinder in the order named, a pair of superposed valve sleeves substantially concentric with the cylinder, a port in one of said valve sleeves arranged to coöperate with the ports in a predetermined order, and ports in the other valve sleeves arranged to coöperate with the first sleeve.

15. In a hydrocarbon engine, in combination, a cylinder, inlet, ignition and exhaust ports located longitudinally of the cylinder in the order named, a pair of superposed valve sleeves substantially concentric with the cylinder, a port in one of said valve sleeves arranged to coöperate with the ports in the predetermined order, a port in the second sleeve arranged to govern the inlet and exhaust, and a port in the second sleeve arranged to govern the ignition.

16. In a hydrocarbon motor, the combination with a cylinder having inlet and exhaust ports, and a working piston in said cylinder, said cylinder also having a spark plug in the side thereof, of a valve sleeve guided by said cylinder and having a port adapted to register at different times with said inlet and exhaust ports and with said spark plug.

17. In a hydrocarbon engine, in combination, a cylinder provided with ports, a non-rotating piston working in the cylinder, a valve mechanism for controlling said ports and including a valve sleeve arranged concentric with the piston and cylinder and movable relatively to said piston and cylinder, a valve shaft rotated by the engine crank shaft. and means operated entirely by said valve shaft and including a second rotating member driven by said valve shaft, for moving said valve sleeve axially and about its axis.

18. In a hydrocarbon engine, in combination, a cylinder provided with ports, a non-rotating piston working in the cylinder, a valve mechanism for controlling said ports and including a valve sleeve arranged concentric with the piston and cylinder and movable relatively to said piston and cylinder, a valve shaft rotated by the engine crank shaft, and means operated by said valve shaft and including a pair of intermeshing worm gears arranged at right angles to each other, for moving said valve sleeve axially and about its axis.

19. In a hydrocarbon engine, in combination, a cylinder having inlet and exhaust ports, a non-rotating piston working in the cylinder, a valve mechanism controlling said cylinder ports for operating the engine on the four stroke cycle and including a valve sleeve arranged concentric with the piston and cylinder and movable relatively to said piston and cylinder, a valve shaft rotated by the engine crank shaft, and means operated by said valve shaft for actuating said valve mechanism and including devices for imparting to said valve sleeve a combined movement longitudinally of and about its axis, said devices including a rotary member having its axis in a plane perpendicular to the axis of said valve shaft and having worm gear teeth, a sliding connection between said member and said sleeve, and gearing between said valve shaft and said rotary member including a worm gear in mesh with said worm gear teeth.

20. In a hydrocarbon engine, in combination, a cylinder having inlet and exhaust ports, a non-rotating piston working in the cylinder, a valve mechanism controlling said cylinder ports for operating the engine on the four stroke cycle and including a valve sleeve arranged concentric with the piston and cylinder and movable relatively to said piston and cylinder, a valve shaft rotated by the engine crank shaft, and means operated by said valve shaft for actuating said valve mechanism and including devices for imparting to said valve sleeve a combined movement longitudinally of and about its axis, said devices including a rotary member having its axis in a plane with the axis of said valve sleeve and perpendicular to the axis of said valve shaft, said member having worm gear teeth, a sliding connection between said member and one side of said sleeve, and gearing between said valve shaft and said rotary member including a worm gear in mesh with said worm gear teeth.

21. In a hydrocarbon engine, in combination, a base or crank case, a cylinder mounted thereon and having inlet and ex-

haust ports at its head end, a non-rotating piston working in the cylinder below said ports, a valve mechanism controlling said cylinder ports for operating the engine on the four stroke cycle and including a valve sleeve arranged concentric with the piston and cylinder and movable relatively to said piston and cylinder, a valve shaft in the crank case rotated by the engine crank shaft, and means within said crank case and operated by said valve shaft for actuating said valve mechanism, said means including devices for imparting to said valve sleeve a combined movement longitudinally of and about its axis, and said devices including a rotary member retained against endwise movement and having its axis in a plane with the axis of said valve sleeve and perpendicular to the axis of said valve shaft, said member having worm gear teeth, sliding connecting means between said member and one side of said sleeve, and gearing between said valve shaft and said rotary member including a worm gear in mesh with said worm gear teeth.

22. In a hydrocarbon engine, in combination, a cylinder having inlet and exhaust ports, a non-rotating piston working in the cylinder, a valve mechanism controlling said cylinder ports for operating the engine on the four stroke cycle and including a valve sleeve arranged concentric with the piston and cylinder and movable relatively to said piston and cylinder, a valve shaft rotated by the engine crank shaft, and means operated by said shaft for actuating said valve mechanism and including means for imparting to said valve sleeve a combined movement longitudinally of and about its axis, said means including a member connected to the lower end of said sleeve so as to move relatively to the sleeve and also partake of the longitudinal movement thereof, a pivot on said member, and means operatively connecting said pivot and said shaft.

23. In a hydrocarbon engine, in combination, a cylinder provided with inlet and exhaust ports, a piston working in the cylinder, a cylindrical member coaxial with the piston and spaced from the inner cylinder wall, a valve sleeve having a series of ports extending around it in substantially a single zone, said ports being adapted to cooperate with the inlet and exhaust ports in the cylinder, said sleeve being arranged between the cylinder and piston and between the cylinder and said cylindrical member and movable relatively to said cylinder, piston and cylindrical member, said cylinder, piston and cylindrical member being non-rotatable about their own common axis, and means operated from the engine crank shaft for moving said sleeve axially relative to said cylinder, piston and cylindrical member and about its own axis, said cylindrical member closing the ports of the sleeve on the compression and firing strokes.

24. In a hydrocarbon engine, in combination, a cylinder provided with separate inlet and exhaust ports near its head, a non-rotating piston working in the cylinder below said ports, a valve mechanism for controlling said ports and including a valve sleeve arranged concentric with the piston and cylinder and movable relatively to said piston and cylinder, said valve sleeve having a port adapted to register in succession with said exhaust and inlet ports, and means for operating said valve mechanism including devices for moving the valve sleeve axially with a stroke less than the stroke of the piston and for partly rotating said sleeve during each stroke of the piston, whereby the inlet and exhaust ports are opened and closed on the four stroke cycle and the oil on the valve mechanism is efficiently distributed.

25. In a hydrocarbon engine, in combination, a working piston, a stationary cylinder head opposed thereto, a valve sleeve movable on the piston and head and surrounding the combustion space between the piston and head, said sleeve having a port, a cylindrical member surrounding said valve sleeve and in which said sleeve slides, said member having a port adapted to cooperate with the port in the valve sleeve, and means for reciprocating said valve sleeve on the piston and head so that the port of said sleeve is covered by said head during part of the engine cycle and for simultaneously causing a relative lateral movement between said sleeve and member.

26. In a hydrocarbon engine, in combination, a working piston, a stationary cylinder head opposed thereto, a valve sleeve movable on the piston and head and surrounding the combustion space between the piston and head, said valve having a port, a cylindrical member surrounding said valve sleeve and in which said sleeve slides, said member having a port adapted to cooperate with the port in the valve sleeve, and means for reciprocating said valve sleeve on the piston and head and simultaneously causing a relative lateral movement between said sleeve and member whereby the port of the sleeve is covered by the head during part of the engine cycle and the port of the cylindrical member is covered by the sleeve during parts of the compression and firing strokes of said cycle.

27. A four cycle engine valve system, comprising a main cylinder having inlet and exhaust ports at right angles to the axis of the cylinder near its head, a valve mechanism adapted to control the admission, retention during compression and explosion,

and final expulsion of the working medium, said valve mechanism including a separately movable valve sleeve having a port that coacts with the inlet and exhaust ports of the main cylinder, a working piston moving within the sleeve, means for moving said sleeve about its axis to vary the lateral relation of the ports, and means for reciprocating said sleeve with a stroke less than the stroke of the piston to carry said ports into and out of alinement longitudinally.

28. In a hydrocarbon motor, the combination with a cylinder and a working piston therein, of a pair of valve sleeves arranged to slide one on the other between the piston and the cylinder wall, means for reciprocating said sleeves from the crank shaft, and means for constantly rotating one of said sleeves.

29. In a hydrocarbon motor, the combination with a cylinder and a working piston therein, of a pair of valve sleeves arranged between the piston and the cylinder wall and adapted to control the inlet and exhaust ports of said cylinder, means whereby oil may be supplied to said sleeves, means for reciprocating said sleeves to properly open and close the inlet and exhaust ports, and means for rotating one of said sleeves slowly to distribute the oil.

30. In a hydrocarbon engine, in combination, a cylinder provided with inlet, exhaust and ignition ports, and a valve mechanism for controlling the exhaust port and including a sleeve having a port arranged to coöperate with said inlet and ignition ports.

31. In a hydrocarbon engine, in combination, a cylinder provided with inlet, exhaust and ignition ports, and a valve mechanism for controlling the inlet and exhaust ports and including a sleeve sliding in the cylinder and having a port adapted to register with said ignition port, said sleeve being also arranged to coöperate with said inlet and exhaust ports in a predetermined order.

32. In a hydrocarbon motor, the combination with a cylinder having inlet and exhaust ports, and a working piston in said cylinder, said cylinder also having a spark plug in the side thereof, of a valve mechanism adapted to establish communication between said spark plug and the interior of the cylinder and to cover and uncover said inlet and exhaust ports, said mechanism including a sleeve having a port adapted to register with said spark plug.

33. In a hydrocarbon engine, in combination, a crank case and a cylinder thereon having ports, a cylinder head, a ported sleeve extending downwardly from the head into the crank case and separated from the cylinder wall, a second sleeve arranged between said ported sleeve and cylinder wall and having ports coöperating with the ports in said cylinder and ported sleeve, said second sleeve being adapted to rotate, a ring arranged at the lower end of said second sleeve for rotating same, means on the cylinder and crank case to guide said ring in its rotary movement, and means gearing with said ring for rotating it.

34. In a hydrocarbon engine, in combination, a cylinder provided with ports, a non-rotating sleeve within the cylinder and having ports adapted to coöperate with the cylinder ports, a piston working within said sleeve, a second sleeve arranged between the cylinder and the non-rotating sleeve and having ports adapted to coöperate with the ports of said cylinder and non-rotating sleeve, said second sleeve being supported adjacent its lower end, and means for rotating said second sleeve.

35. In a hydrocarbon engine, in combination, a cylinder provided with ports, a non-rotating sleeve within the cylinder and having ports adapted to coöperate with the cylinder ports, a piston working within said sleeve, a second sleeve arranged between the cylinder and the non-rotating sleeve and having ports adapted to coöperate with the ports of said cylinder and non-rotating sleeve, and means adjacent the lower end of said second sleeve for supporting and operating it, said means causing a continuous rotation of said second sleeve.

36. In a hydrocarbon engine, in combination, a cylinder provided with inlet and exhaust ports arranged in different transverse planes and separated by a partition, a piston working in the cylinder, a plurality of superposed valve sleeves concentric with the cylinder, and one of the valve sleeves having a port arranged to coöperate with the inlet and exhaust ports.

37. In a hydrocarbon engine, in combination, a cylinder provided with inlet and exhaust ports located one above the other and separated by a partition, a plurality of superposed valve sleeves working in the cylinder, a piston working in the valve sleeves, and one of the valve sleeves having a port arranged to coöperate with the inlet and exhaust ports.

38. In a hydrocarbon engine, in combination, a cylinder provided with inlet and exhaust ports arranged in different transverse planes and separated by a partition, a piston working in the cylinder, a plurality of superposed valve sleeves concentric with the cylinder, one of the valve sleeves having a port arranged to coöperate with the inlet and exhaust ports, and a pair of angularly displaced eccentrics for operating the sleeves.

39. In a hydrocarbon engine, in combination, a cylinder provided with inlet and exhaust ports arranged in different trans-

verse planes and separated by a partition, a piston working in the cylinder, a plurality of superposed valve sleeves concentric with the cylinder, one of the valve sleeves having a port arranged to coöperate with the inlet and exhaust ports, and a pair of eccentrics for operating the sleeves, said eccentrics being angularly displaced substantially 30°.

40. In a four-stroke cycle hydrocarbon engine, in combination, a main cylinder having inlet and exhaust ports, a valve mechanism adapted to control the admission, retention during compression and explosion, and final expulsion of the working medium, said valve mechanism comprising a separately movable valve sleeve having a port that coacts with the inlet and exhaust ports of the cylinder, a working piston operating within the valve sleeve, means for moving said sleeve so as to cause its port to move in a curved path and register with first the exhaust port of the cylinder and then the inlet port thereof during the exhaust and intake strokes of the piston, respectively, and bring the sleeve to its initial position during the following compression and firing strokes of the piston, and means for covering the port of said sleeve to close communication between the main cylinder ports and the engine explosion space during said latter strokes of the piston.

41. In a four-stroke cycle hydrocarbon engine, in combination, a main cylinder having inlet and exhaust ports, a valve mechanism adapted to control the admission, retention during compression and explosion, and final expulsion of the working medium, said valve mechanism comprising a separately moving valve sleeve having a port extending through the wall from the inner to the outer surface thereof, said port being adapted to coact with the inlet and exhaust ports of the main cylinder, a working piston operating within the valve sleeve, means in contact with one of the surfaces of the valve sleeve adapted to cover the port of said sleeve during the compression and firing strokes of the piston, means for moving said sleeve relatively to said main cylinder to cause the port of the sleeve to travel successively across said exhaust and inlet ports of the main cylinder on the exhaust and intake strokes respectively of the piston, means for reversing the direction of travel of said sleeve relatively to said main cylinder on the two next succeeding strokes of the piston, and means for causing an additional relative movement between said sleeve and said first mentioned means, for covering the port of said sleeve on said last two, or compression and firing, strokes of the piston.

42. The combination with the cylinder of an internal combustion engine having inlet and outlet ports, of sleeves in axial coincidence with said cylinder each having ports adapted to register with those of the cylinder and of the other sleeve, means for reciprocating one of said sleeves longitudinally, and means for rotating the other sleeve, said means adapted to operate at the same time.

43. In a hydrocarbon engine, the combination with a cylinder and a working piston therein, of a pair of valve sleeves arranged substantially concentric with the cylinder and piston and adapted to control the inlet and exhausts ports of said cylinder, and means for reciprocating said sleeves and for moving one of said sleeves laterally, to distribute the lubricant and to bring the ports of the sleeves and the cylinder into coöperation.

In testimony whereof I affix my signature in presence of two witnesses.

RUSSELL HUFF.

Witnesses:
C. I. Dale,
E. N. Hearn.

Fuel pump

R. HUFF.

FUEL TANK PRESSURE SYSTEM.

APPLICATION FILED SEPT. 2, 1909.

1,126,012. Patented Jan. 26, 1915.

3 SHEETS—SHEET 1.

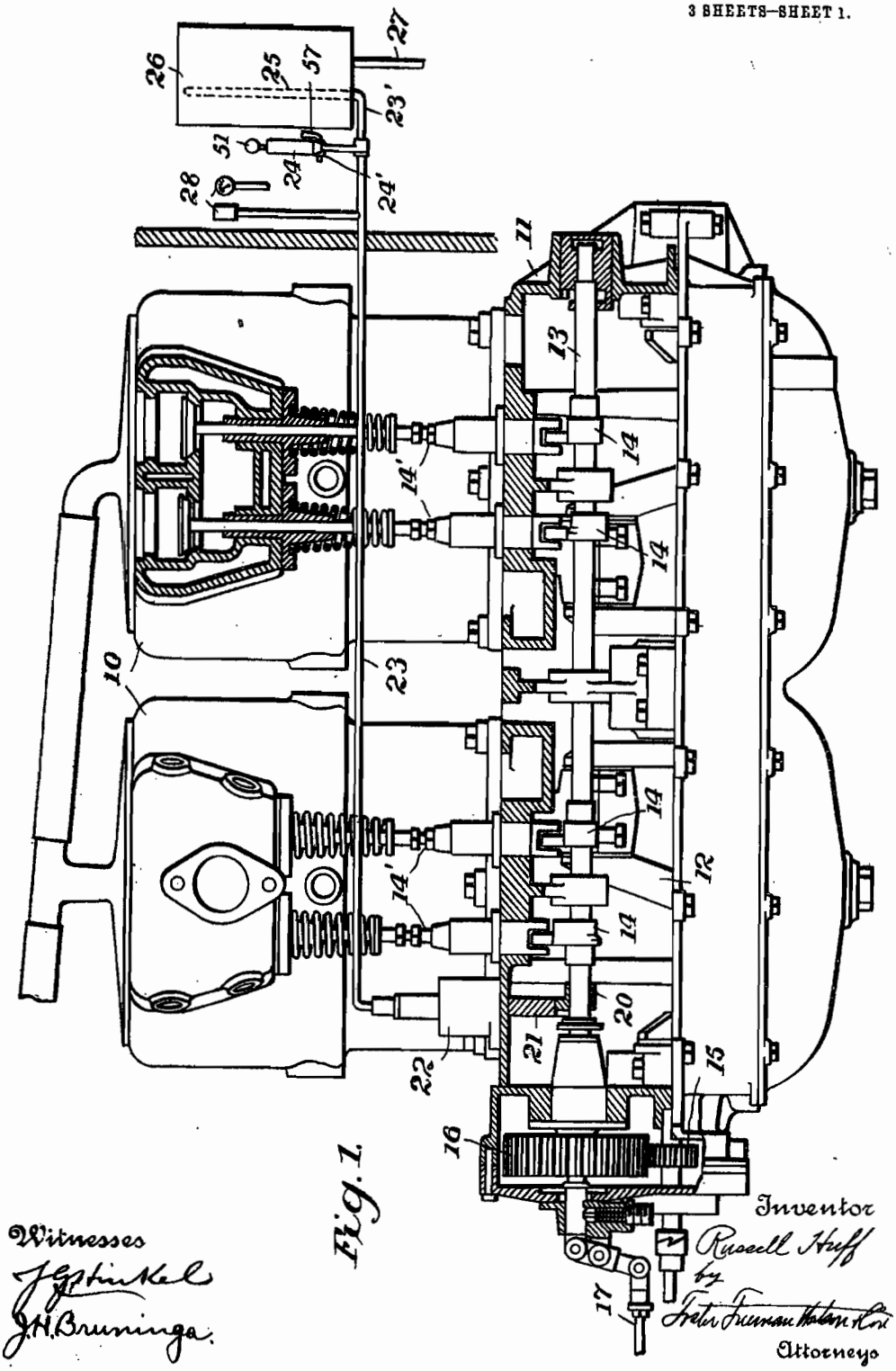

Fig. 1.

Witnesses

J. G. Hinkel

J. H. Bruninga.

Inventor

Russell Huff

by

Foster Freeman Watson & Coe

Attorneys

THE NORRIS PETERS CO., PHOTO-LITHO., WASHINGTON, D. C.

R. HUFF.

FUEL TANK PRESSURE SYSTEM.

APPLICATION FILED SEPT. 2, 1909.

1,126,012.

Patented Jan. 26, 1915.

3 SHEETS—SHEET 2.

Fig. 2.

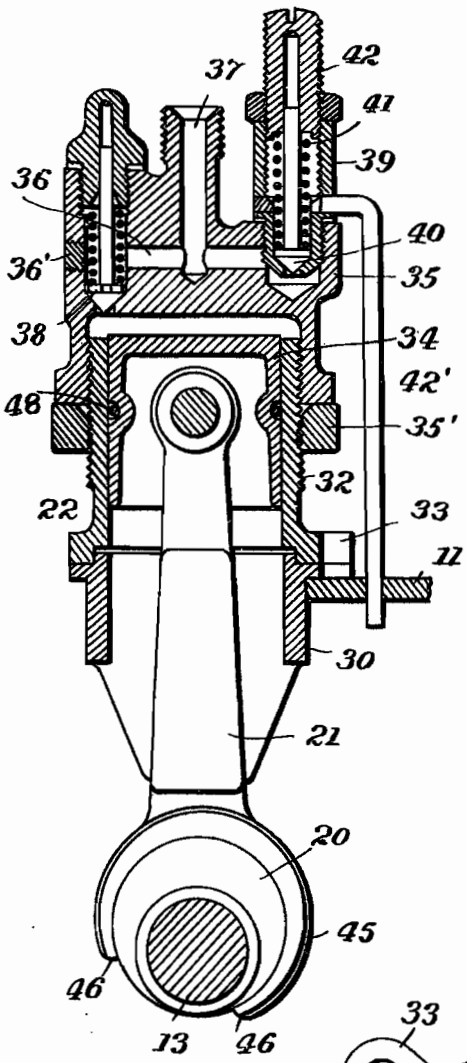

Fig. 3.

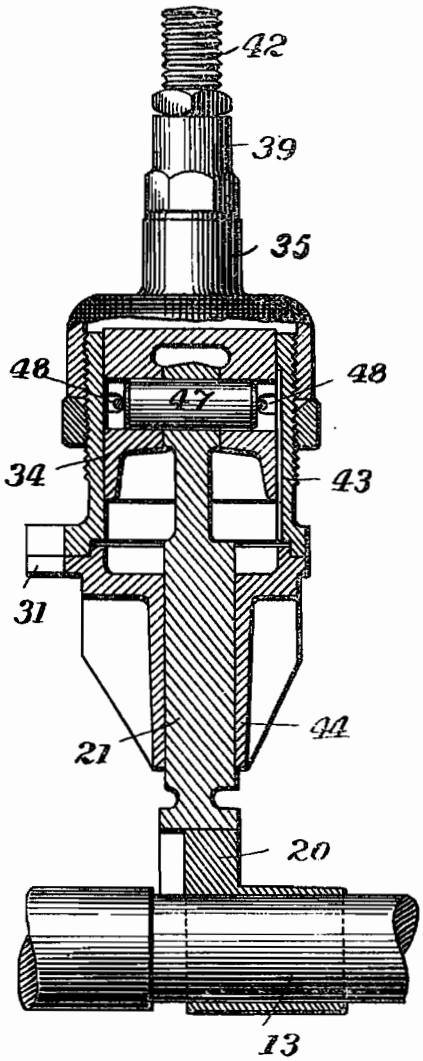

Fig. 4.

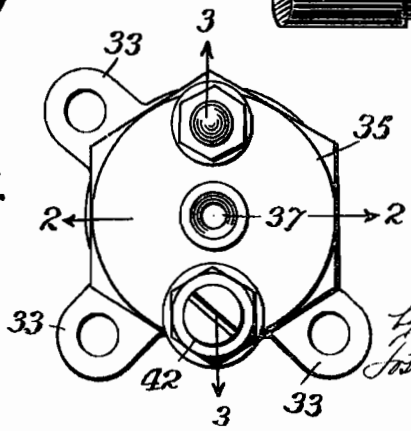

Witnesses

J. G. Sinkel

J. N. Breuninger

Inventor

Russell Huff

by

Foster Freeman Watson & Coit

Attorneys

THE NORRIS PETERS CO. PHOTO-LITHO., WASHINGTON, D

R. HUFF.

FUEL TANK PRESSURE SYSTEM.

APPLICATION FILED SEPT. 2, 1909.

1,126,012.

Patented Jan. 26, 1915.

3 SHEETS—SHEET 3.

Fig. 6.

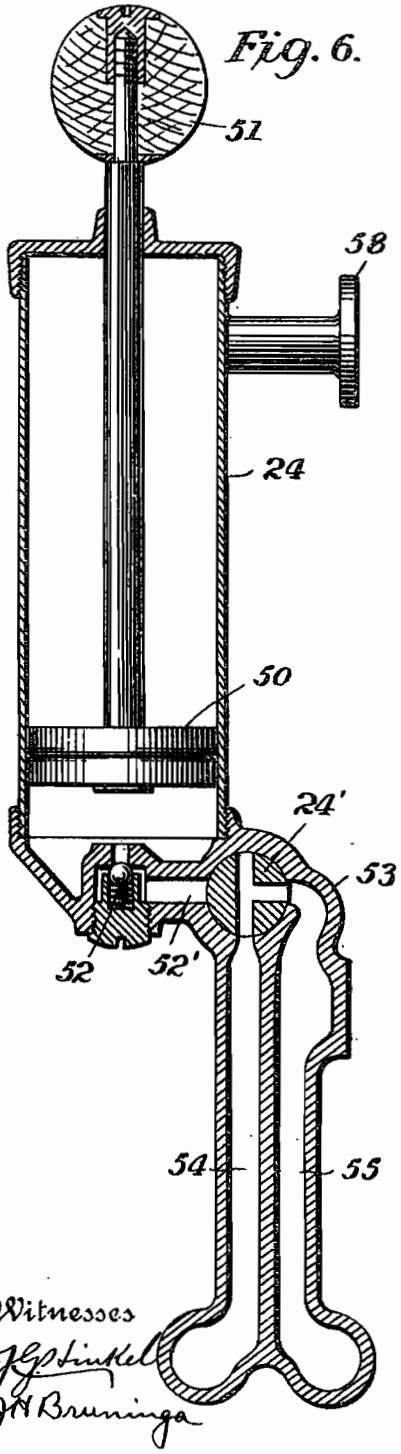

Fig. 5.

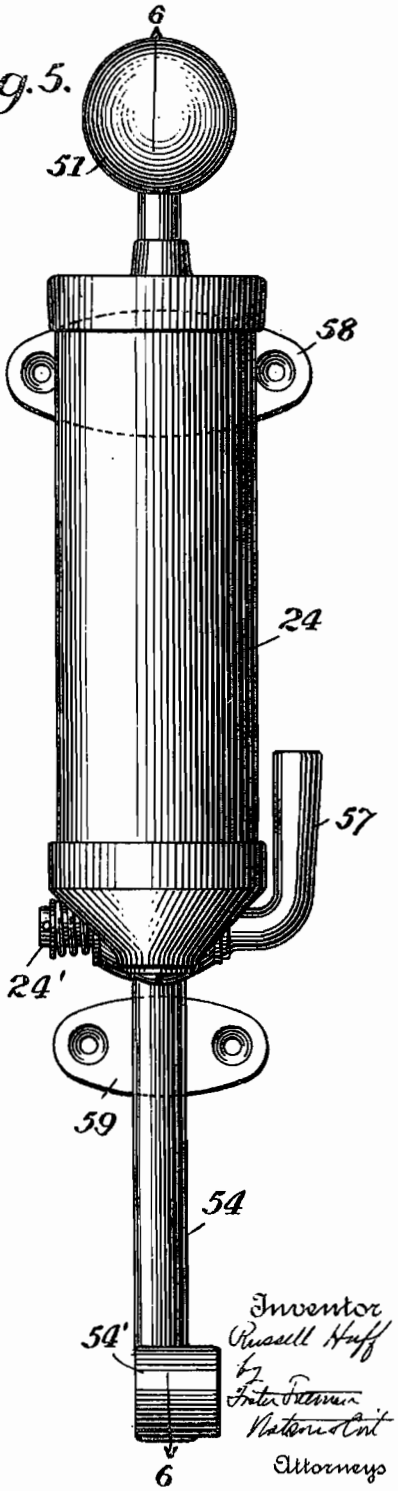

Witnesses

J. G. Pinkel

J. H. Bruninga

Inventor

Russell Huff

by

Foster Freeman

Watson & Cole

Attorneys

THE NORRIS PETERS CO., PHOTO-LITHO., WASHINGTON, D. C.

UNITED STATES PATENT OFFICE.

RUSSELL HUFF, OF DETROIT, MICHIGAN, ASSIGNOR, BY MESNE ASSIGNMENTS, TO PACKARD MOTOR CAR COMPANY, OF DETROIT, MICHIGAN, A CORPORATION OF MICHIGAN.

FUEL-TANK PRESSURE SYSTEM.

1,126,012. Specification of Letters Patent. Patented Jan. 26, 1915.

Application filed September 2, 1909. Serial No. 515,885.

To all whom it may concern:

Be it known that I, RUSSELL HUFF, a citizen of the United States, and resident of Detroit, in the county of Wayne and State of Michigan, have invented certain new and useful Improvements in Fuel-Tank Pressure Systems, of which the following is a specification.

This invention relates to fuel tank pressure systems for hydrocarbon motors.

The objects of this invention are to provide a system in which the tank is supplied with internal pressure both by a manually operated pump and an automatic pump driven by the engine, and to supply valve mechanism and connections whereby either of the pumps may be thrown into communication with the tank; to provide mechanism whereby the relief valve for regulating the pressure in the tank, and the pumps are rendered accessible; to arrange the pressure gage in a novel manner; and to simplify the construction of the pumps whereby they may be easily assembled in correct position.

The invention generally stated consists in an automatic pump which is driven by the engine, in this case by an eccentric mounted upon the cam shaft, a pipe connecting the pump with a fuel supply tank, a hand-operated pump, and a three-way valve which is adapted to connect either of the pumps with the tank, or cut out both. A pressure gage is connected to the pipe at a point located between the cut-off valve and the engine-driven pump. The relief valve is mounted upon the engine-driven pump which is mounted upon the crank case whereby the pump and relief valves are rendered accessible. The construction of the automatically driven pump is such that it may be easily assembled and the individual parts are so constructed that it is insured that the parts will be located in proper position.

In the drawings: Figure 1 is an elevation partly in section of a four-cylinder hydrocarbon engine showing this invention applied thereto; Fig. 2 is a section on the line 3—3 Fig. 4, showing the engine-driven pump; Fig. 3 is a section on the line 2—2 Fig. 4; Fig. 4 is a plan view of the engine-driven pump; Fig. 5 is an elevation of the manually operated pump; and Fig. 6 is a section on the line 6—6 Fig. 5.

Referring to the drawings, 10, 10 designate the cylinders of a four-cylinder hydrocarbon engine, which cylinders are bolted in pairs to the crank case 11. A crank-shaft 12 and a valve-shaft 13 are mounted in the crank case. The valve-shaft is provided with cams 14 adapted to engage cam rolls mounted upon the exhaust valve stems 14′. The valve-shaft 13 and its cams are of the construction shown in my copending application Serial No. 327,049.

As described in the above application the valve-shaft 13 is movable endwise to throw the relief cams in operative engagement with the rolls upon the stems 14′, an operating handle 17 being provided for this purpose. The valve-shaft 13 is driven by a two-to-one gear 15, 16, from the crank shaft.

An eccentric 20 is rigidly connected with the shaft 13 and is adapted to operate a connecting rod 21 connected to the piston of the pump 22 which is bolted to the crank-case. A pipe line composed of sections 23, 23′ extends from the outlet of the pump 22 to the fuel supply tank 26, the section 23′ terminating in a riser 25 extending to the top of the tank. A hand-pump 24 connects the sections 23, 23′, and a three-way valve 24′ is interposed in this connection and is adapted to connect either of the pumps with the pipe 23′. A pipe 27 extends from the tank 26 to the carbureter. A pressure gage 28 is connected to the pipe 23 at a point located between the valve 24′ and the pump 22.

The pump 22 comprises a base 30 provided with ears 31 and extends through a hole formed in the crank case. The cylinder 32 is provided with ears 33. The sections 30 and 32 are bolted to the crank case by bolts extending through the ears 31 and 33. A piston 34 operates in the cylinder and is connected to the connecting rod 21 by means of a wrist pin. The cylinder 32 is externally threaded and is closed by a cylinder head 35 which is provided with an internal thread engaging the thread on the cylinder. A lock-nut 35′ is provided for locking the head in place. The cylinder head is provided with a transverse passage 36 which may be formed therein in any suitable manner, preferably by boring the same, the hole being closed by a plug 36′. An outlet passage 37 intersects the passage 36 and connects with the pipe line 23 in any suitable manner, preferably by the ordinary union joint. A spring-controlled check valve 38

controls the connection between the passage 36 and the cylinder. A relief valve casing 39 is screwed into the cylinder head and is provided with a relief valve 40 controlled by a spring 41, the tension of the spring being controlled by an adjusting screw 42. A pipe 42′ connects the cavity above the relief valve with the crank case 11. The cylinder is provided on its interior surface with a groove 43 which throws the crank-case into communication with the upper part of the cylinder when the piston is in its lowest position, the communication however being cut off when the piston passes the end of the groove, as shown in Fig. 3. The base 30 is provided with downwardly extending portions forming guides 44 for the connecting rod 21. The connecting rod is provided with an eccentric strap 45 cut away as shown at 46, 46. This cut away portion is of sufficient size so that the eccentric strap 45 can be removed from the shaft by moving the same endwise until it clears the eccentric 20, and then moving the same vertically. The wrist pin 47 connecting the piston and the connecting rod is removable and retained in place by the usual spring band 48,

It will be seen that the pump is of such a construction that the parts may be easily assembled. The guides 44 guide the connecting rod 21 and restrain it against endwise movement while the valve shaft 13 is moved endwise to throw the relief cams into and out of position. The connecting rod 21 and the eccentric strap 45 are unsymmetrical in form, whereby it is insured that the connecting rod and the eccentric will be placed in proper position on the valve shaft and in addition the off-set arrangement of the eccentric strap 45 will prevent interference between the strap and the connecting rod and the crank-shaft. The entire pump may be disassembled and disconnected from the valve-shaft in the following manner: The bolts extending through the ears 33 are removed and the cylinder 32 is removed from the piston by an endwise and upward movement. The piston is now removed from the connecting rod 21 by removing the band 48 and the wrist pin 47. The base 30 is now removed from the connecting rod, and the connecting rod is moved to the left until the strap 45 clears the eccentric 20, and then moved upwardly, the opening formed in the strap 45 clearing the shaft 13. The valve-shaft 13 must be moved to the position shown in Figs. 1 and 3 in order that the strap 45 may clear the eccentric 20. In order to insure that the parts 30 and 32 may be correctly positioned each of said parts is provided with three ears 31 and 33, respectively, and the crank case is provided with three tapped holes for receiving the bolts extending through the ears.

The pump 24 is provided with a piston 50 of the usual construction and with an operating handle 51. A check-valve 52 of the usual construction is located in the discharge passage 52′. The body of the pump is provided with an extension 53 which has formed therein a channel 54, connected with the pipe 23, which is screwed into the boss 54′, and a channel 55 similarly connected with the pipe 23′. A three-way valve 24′ provided with a handle 57 is located at the junction of the channels 54 and 55 and the discharge passage 52′. The three-way valve is adapted to connect either the passage 52′, or the channel 54 leading to the pump 22, with the channel 55 and the pipe 23′. Suitable stops are provided for arresting the valve in two extreme positions. An intermediate position of the valve will cut off both the passage 52′ and the channel 54 from the channel 55 and the pipe 23′. The pump 24 is provided with attaching lugs 58, 59, whereby it may be attached to the vehicle or a support.

The operation of this system is as follows: With the valve 24′ in the position shown in Fig. 6, in which it connects the channels 54 and 55, the pump 22 is connected to the pipe 23′ and the riser 25. While the engine is running the tank 26 will be continually supplied with internal pressure by means of the air drawn from the crank case. The relief valve 40, located on the pump 22, will govern the pressure within the tank 26, and since it is located on the pump it is rendered more accessible than if it were located on the supply tank. Furthermore, since in motor vehicles the supply tank is generally located beneath the seat, it is objectionable to locate the relief valve on the tank, as the escaping air may be laden with a combustible gas. In this construction however the air which escapes past the relief valve is discharged back into the crank case or may, if so desired, escape into the atmosphere in the neighborhood of the engine, which is not objectionable. The engine-driven pump is of small capacity and it is therefore desirable to provide an auxiliary pump whereby the pressure within the supply tank may be quickly raised to the desired value. For this reason the hand-pump 24 is provided. When the engine is started the valve 24′ is thrown to the left from the position shown in Fig. 6 until the passage 52′ is connected with the channel 55, and the hand-pump is operated until the desired pressure is obtained. This pressure may at any time be determined by throwing the valve back to the position shown in Fig. 6 and noting the reading of the pressure gage 28. The pressure gage 28 is located between the valve 24′ and the pump 22. Therefore it will at all times note the pressure of the tank 26 if the pipes 23, 23′

are thrown into communication by the valve 24′. By closing the valve 24′ and running the engine the condition of the pump 22 may be determined. If this pressure gage were located on the tank 26′ it would be impossible to determine the condition and the proper working of the pump 22 until the tank 26, which is of large capacity relatively to the pump 22, would be filled, but by locating the gage between the valve 24′ and the pump 22 the condition of the pump may be determined at all times by simply closing the valve 24′.

It is obvious that various changes may be made in the details of construction without departing from this invention and it is therefore to be understood that this invention is not to be limited to the specific construction shown and described.

What I claim is:

1. In a hydrocarbon motor, the combination with an endwise movable cam shaft, of an eccentric thereon, a pump, a piston in the pump, a connecting rod connecting the piston and eccentric, and guides on both sides of the piston rod to prevent lateral displacement thereof when the cam shaft is shifted.

2. In a hydrocarban motor, the combination with a crank case and a shaft in the crank case, of an eccentric on the shaft, a pump on the crank case, a piston for the pump, and a connecting rod connecting the piston and eccentric, said connecting rod adapted to be disconnected from the eccentric by a movement endwise of the shaft.

3. In a hydrocarbon motor, the combination with the crank case, a cam shaft mounted therein, and an eccentric mounted on the cam shaft, of a pump mounted on the crank case and having a connecting rod formed with a bearing to fit said eccentric, said bearing being cut away a distance more than the diameter of the cam shaft but less than the diameter of the eccentric, whereby said rod may be fitted to and removed from said eccentric by a movement endwise of the cam shaft.

4. In a hydrocarbon motor, the combination with a crank case and a shaft in the crank case, of an eccentric on the shaft, a pump on the crank case, a piston for the pump, a connecting rod connecting the piston and eccentric, said connecting rod adapted to be disconnected from the eccentric by a movement endwise of the shaft, and a removable guide for the connecting rod to prevent lateral displacement thereof.

5. In a hydrocarbon motor, the combination with a crank case and a shaft in the crank case, of an eccentric on the shaft, a pump on the crank case, a piston for the pump, a connecting rod connecting the piston and eccentric, said connecting rod adapted to be disconnected from the eccentric by a movement endwise of the shaft, a removable guide for the connecting rod to prevent lateral displacement thereof, and a detachable connection between the piston and the connecting rod to permit removal of the guide.

In testimony whereof I affix my signature in presence of two witnesses.

RUSSELL HUFF.

Witnesses:
ALFRED H. KNIGHT,
O. E. HUNT.

Copies of this patent may be obtained for five cents each, by addressing the "Commissioner of Patents. Washington, D. C."

R. HUFF.

WIND SHIELD FOR MOTOR VEHICLES.

APPLICATION FILED OCT. 8, 1909.

Patented Apr. 4, 1916

2 SHEETS—SHEET 1.

1,177,626.

Fig. 1.

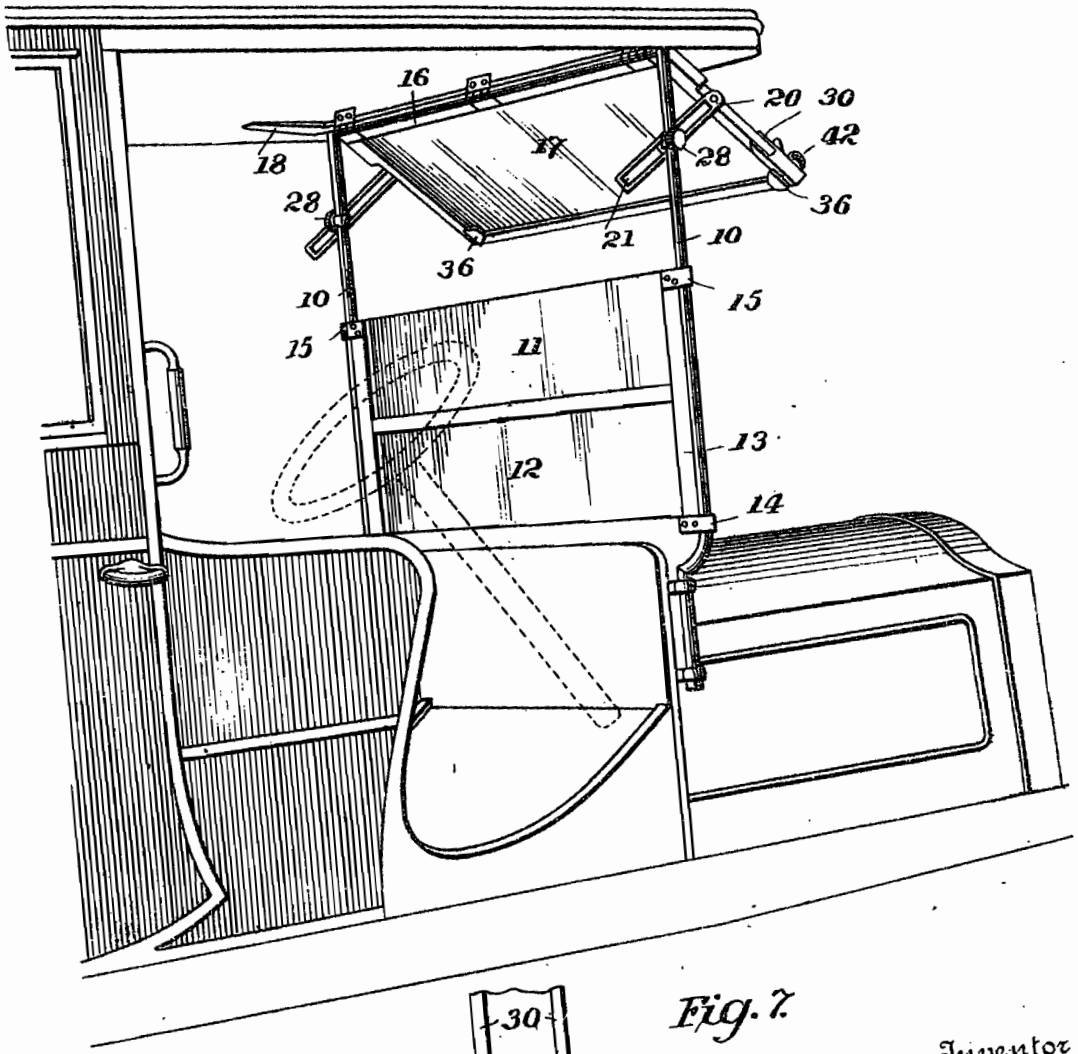

Fig. 7.

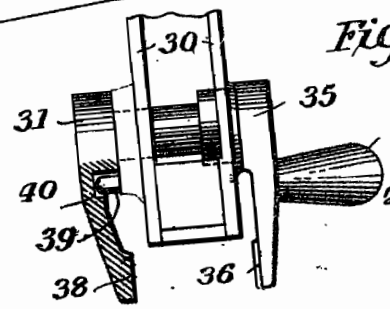

Witnesses
J. G. Stinkel
J. N. Bruninga

Inventor
Russell Huff
By Foster Freeman Watson & Coe
Attorneys

R. HUFF.

WIND SHIELD FOR MOTOR VEHICLES.

APPLICATION FILED OCT. 8, 1909.

1,177,626. Patented Apr. 4, 1916.

2 SHEETS—SHEET 2.

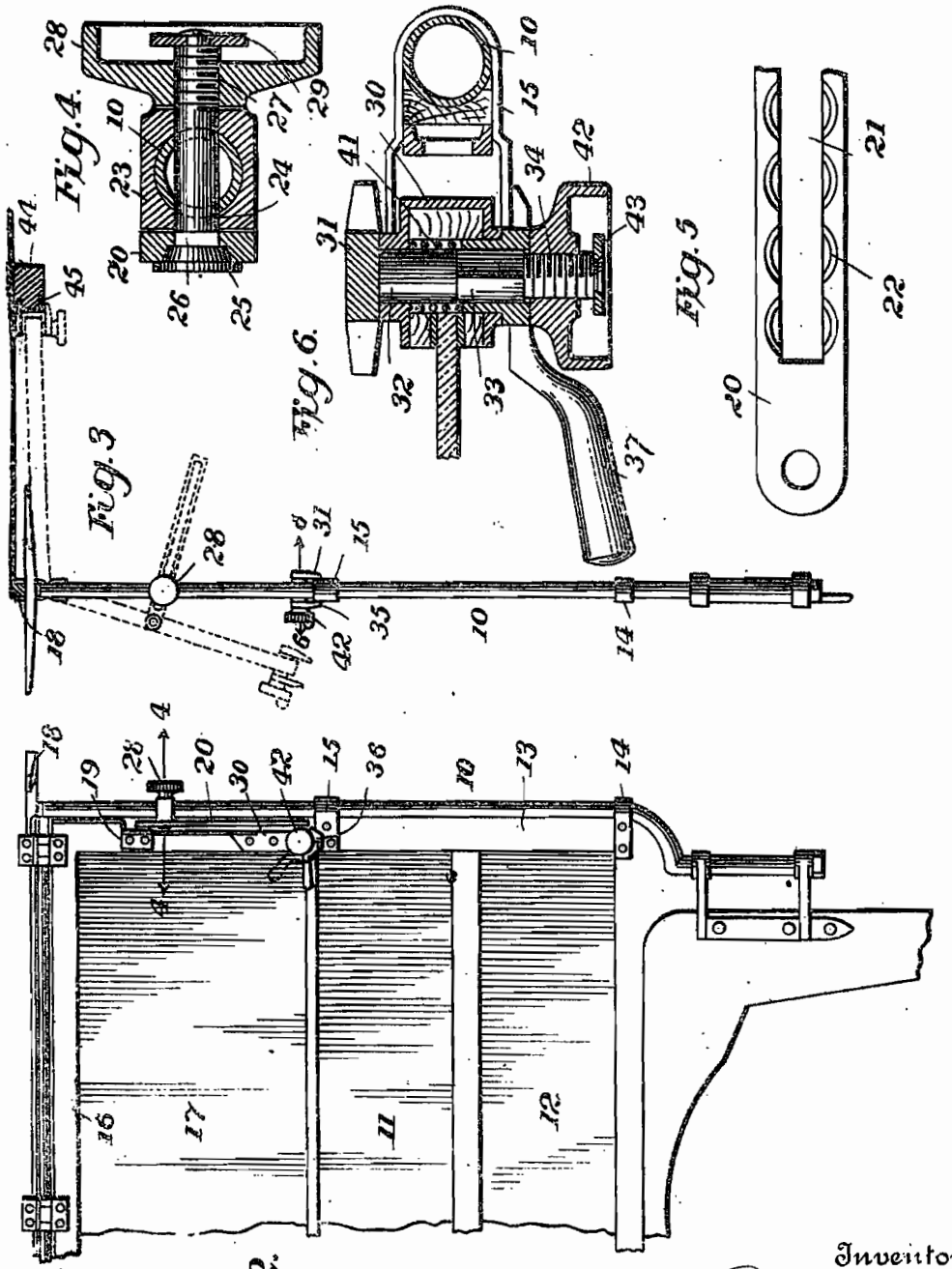

Witnesses

J. G. Stinkel

J. N. Bruninga

Inventor

Russell Huff

By Foster Freeman Watson & Coit

Attorneys

UNITED STATES PATENT OFFICE.

RUSSELL HUFF, OF DETROIT, MICHIGAN, ASSIGNOR, BY MESNE ASSIGNMENTS, TO PACKARD MOTOR CAR COMPANY, OF DETROIT, MICHIGAN, A CORPORATION OF MICHIGAN.

WIND-SHIELD FOR MOTOR-VEHICLES

1,177,626. Specification of Letters Patent. Patented Apr. 4, 1916.

Application filed October 8, 1909. Serial No. 521,677.

To all whom it may concern:

Be it known that I, RUSSELL HUFF, a citizen of the United States, and resident of Detroit, Wayne county, State of Michigan, have invented certain new and useful Improvements in Wind-Shields for Motor-Vehicles, of which the following is a specification.

This invention relates to wind shields for motor vehicles and in particular to wind shields used with limousines in which the roof extends over the driver's seat.

The objects of this invention are to provide a wind shield which may be adjusted to open and closed positions and swung back out of the way under the roof and secured there.

The invention generally stated consists in a sash hinged near the roof which is adapted to be swung forwardly and backwardly. A slotted link is pivotally connected to the sash and coöperates with a bolt mounted on the stanchions between which the sash is mounted. This bolt is provided with a head which engages a plurality of depressions or counter bores to lock the sash in a plurality of adjusted positions. A latch of novel design locks the sash in closed position and also in its position underneath the roof.

In the drawings, Figure 1 is a perspective view showing the invention applied to a motor vehicle; Fig. 2 is a front elevation; Fig. 3 is a vertical section; Fig. 4 is a section on the line 4—4, Fig. 2; Fig. 5 is a detail of the link; Fig. 6 is a section on the line 6—6, Fig. 3; Fig. 7 is a detail of the latch.

Referring to the drawings, 10—10 designate a pair of stanchions which are secured to the dash and the roof of the motor vehicle, as shown. A pair of panes 11 and 12 are mounted in a sash 13 secured to the stanchions by means of clips 14 and 15. A sash 16 provided with a pane 17 is hinged to a cross piece 18 secured to the roof.

The locking and adjusting means are duplicated on each side of the swinging sash 16 and therefore description of one set will be sufficient.

A bracket 19 is secured to the sash and has pivotally connected therein a link 20 provided with a slot 21 and a number of counter bores 22. A block 23 is mounted upon the stanchion 10 and the block and stanchion are provided with alined holes which receive a pin 24. The pin is provided with a head comprising a conical portion 25 which is adapted to engage the counter bores 22 and with a rectangular portion 26 which slides in slot 21 and is adapted to prevent the pin 24 from turning. The pin has also cut thereon threads 27 adapted to receive a nut 28 and after the nut is in place a washer 29 is riveted on the pin so as to prevent the nut 28 from moving off the end of the pin. The operation of this adjusting device will be obvious.

In order to adjust the sash to different positions the nut 28 is rotated on the threads 27 of the pin and the pin moved to the left from position shown in Fig. 4, so that the conical portion 25 will become disengaged from the counter bore 22. The sash may then be moved to adjusted position, either forwardly or backwardly, as shown in dotted lines in Fig. 3, and the nut 28 turned up so as to engage the head 25 with another counter bore 22.

The corner of the sash is provided with a metallic reinforce 30 having therein alined apertures, as shown in Fig. 6. A latch member 31 is provided with a shaft 32 having a squared portion 33 and a threaded portion 34. A second latch member 35 is provided with a squared hole which engages the squared portion 33 on the shaft, with a latch lug 36, and a handle 37. The oppositely positioned latch member 31 is provided with a similar latch lug 38. The reinforce 30 has formed on its outer surface a projecting lug or pin 39 which engages with a plurality of recesses 40 in the latch member 31. A spring 41 is mounted on the shaft, as shown in Fig. 6, and normally moves the latch member 35 away from the latch member 31. A nut 42 engages the threaded portion 34 of the shaft, the nut being retained on the shaft by means of the washer 43 riveted thereon.

In the position shown in Figs. 2, 3, 6 and 7, the latch members are shown in the position in which they engage the opposite faces of the clip 15 on the sash so as to securely fasten the sash 16 in closed position. In this position the lug 39 will engage one of the recesses 40 and thus securely lock the latch in operative position. In order to disengage the latch the nut 42 is rotated and the spring 41 moves the latch member 35 outwardly away from the latch member 31. The nut may then be pressed inwardly so

as to disengage the recess 40 from the lug 39 and the latch members may then be rotated by means of the handle 37 so as to disengage both latch lugs 36 and 38 from the clip 15. In order to completely disengage the latch lugs they must be rotated through an angle of ninety degrees and may then be locked in that position by the engagement of the lug 39 with another recess in the latch member 31. The latch lugs 36 and 38 are of such a construction that they will not come into engagement with the pane 11 but will engage the clip 15 in all the latching positions of the latch. This is shown in the dotted line position in Fig. 2. By means of this construction breakage of the pane 11 is prevented.

A cross piece 44 extends underneath the roof of the vehicle and is provided with a metallic reinforce 45 forming a keeper for the latch lugs 36 and 38 when the sash is swung underneath the roof, as shown in dotted line in Fig. 3. The sash may thus be moved out of the way and locked in position.

It is obvious that various changes may be made in the details and construction without departing from this invention and it is therefore to be understood that this invention is not to be limited to the specific construction shown and described.

Having described my invention what I claim as new and desire to secure by Letters-Patent is,

1. In a wind shield for motor vehicles, the combination with a frame, of a swinging member mounted in said frame and adapted to swing to either side thereof, a latch for latching the swinging member in position comprising a pair of independently movable spaced members, a keeper on the frame for coöperating with the spaced members, and means to lock the latch in operative and inoperative positions.

2. In a wind shield for motor vehicles, the combination with a frame, of a swinging member mounted in said frame and adapted to swing to either side thereof, a latch for latching the swinging member in position comprising a shaft mounted in said swinging member, a pair of spaced lugs, one secured to the shaft and the other splined thereto, coöperating locking means on one of the lugs and the swinging members, and a keeper on the frame for coöperating with the lugs.

3. In a wind shield for motor vehicles, the combination with a frame, of a swinging member mounted in said frame and adapted to swing to either side thereof, a latch for latching the swinging member in position comprising a shaft mounted for endwise movement in the swinging member and provided with a latch lug having a plurality of recesses, a spaced latch lug splined to said shaft, a lug on the swinging member adapted to be engaged by the recesses, a spring on the shaft to move the lug and recesses into engagement, a nut to lock them in engaging position, and a keeper on the frame coöperating with the latch lugs.

In testimony whereof I affix my signature in presence of two witnesses.

RUSSELL HUFF.

Witnesses:
E. F. Hahn,
F. M. Chapman.

123/81C

D. J. McKINNON.

INTERNAL COMBUSTION MOTOR.

APPLICATION FILED OCT. 25, 1909.

1,149,380.

Patented Aug. 10, 1915.

2 SHEETS—SHEET 1.

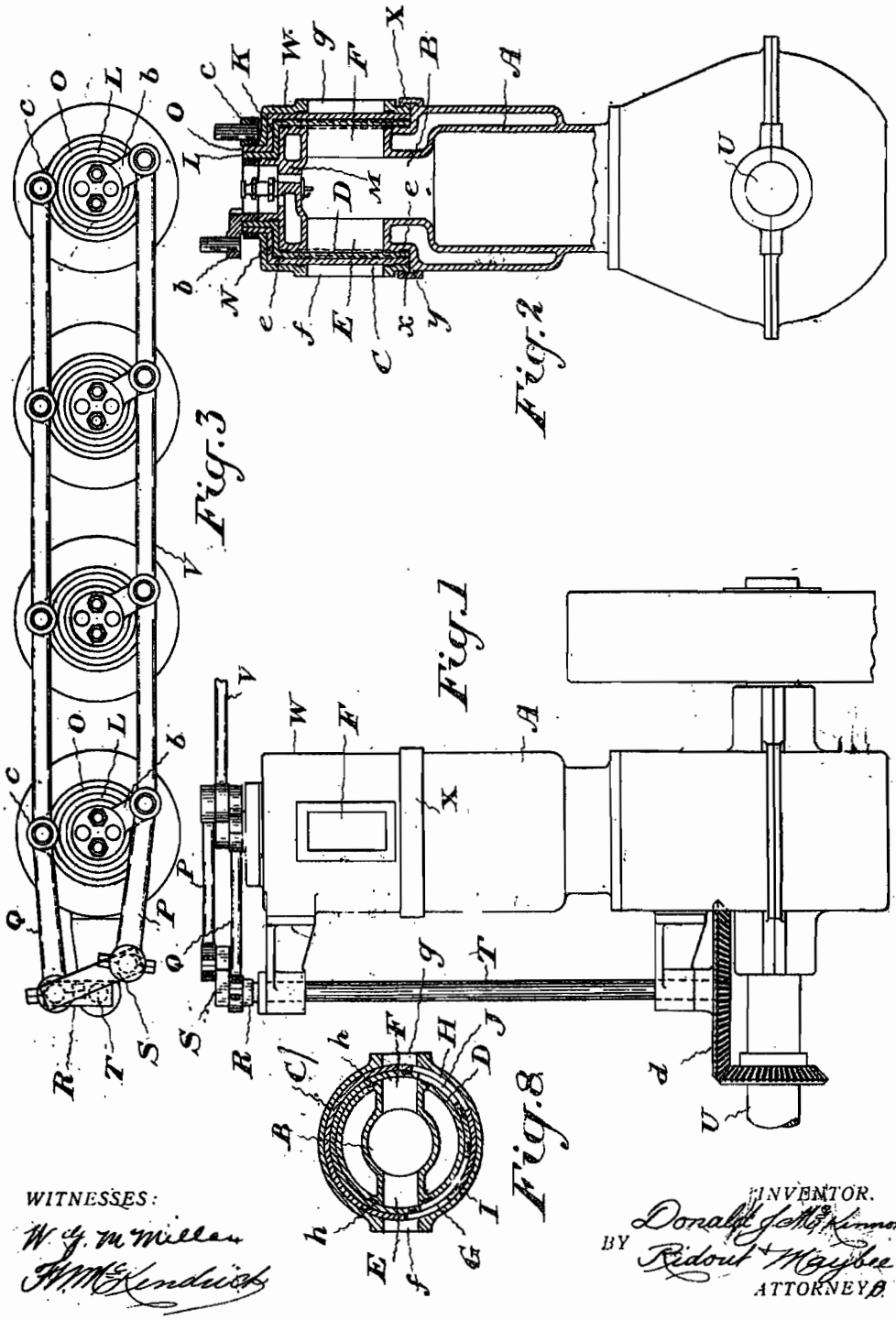

WITNESSES:

W. G. McMillan

H. M. Kendrick

INVENTOR.

Donald J. McKinnon

BY Ridout & Maybee

ATTORNEYS.

D. J. McKINNON.

INTERNAL COMBUSTION MOTOR.

APPLICATION FILED OCT. 25, 1909.

1,149,380. Patented Aug. 10, 1915.

2 SHEETS—SHEET 2.

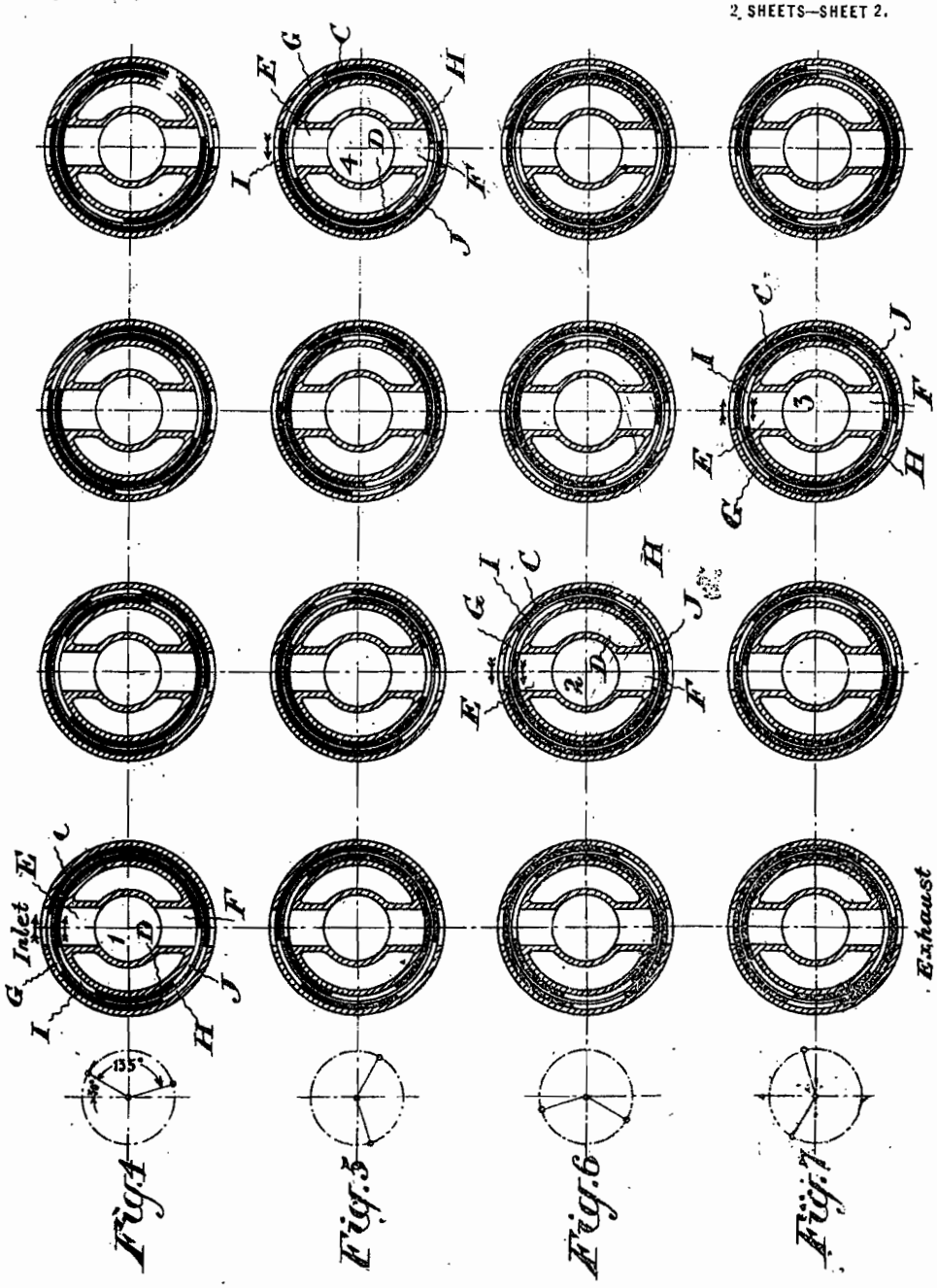

WITNESSES:

W. G. McMillan

A. M. Kendrick

INVENTOR.

Donald J. McKinnon

BY Ridout & Maybee

ATTORNEYS.

UNITED STATES PATENT OFFICE.

DONALD J. McKINNON, OF TORONTO, ONTARIO, CANADA, ASSIGNOR, BY DIRECT AND MESNE ASSIGNMENTS, TO PACKARD MOTOR CAR COMPANY, OF DETROIT, MICHIGAN, A CORPORATION OF MICHIGAN.

INTERNAL-COMBUSTION MOTOR.

1,149,380. Specification of Letters Patent. Patented Aug. 10, 1915.

Application filed October 25, 1909. Serial No. 524.560.

To all whom it may concern:

Be it known that I, DONALD J. McKINNON, of the city of Toronto, Province of Ontario, Canada, have invented certain new and useful Improvements in Internal-Combustion Motors, of which the following is a specification.

This invention relates particularly to the valve construction of the motor and my object is to devise a valve which compared with ordinary valves will be more nearly silent, better balanced, simpler, less subject to wear, and specially adapted to multi-cylinder motors.

I attain my object by providing the combustion chamber of the engine with inlet and exhaust ports in its sides and sleeving thereon cylindrical rotatable valve sleeves having ports therein adapted to register with the ports in the combustion chamber.

The sleeves are given a reciprocating rotary movement by suitable driving means and the driving means are so arranged that the movements of the sleeves are not synchronous. The sleeves thus have a movement relative to one another and this relative movement coupled with a suitable variation in the size of the ports enables me to secure the proper timing of the opening and closing of the ports.

Figure 1 is a side view of a motor provided with my improvements. Fig. 2 is an end elevation of the same partly in section. Fig. 3 is a plan view showing my invention applied to a multi-cylinder motor. Figs. 4—5—6 and 7 are diagrammatical plan views showing the position of the ports in all the cylinders at the commencement of the suction stroke of each cylinder. Fig. 8 is a cross section through the cylinder and valve.

In the drawings like letters of reference indicate corresponding parts in the different figures.

A is a cylinder of an engine which is in the main of ordinary construction and need not be particularly described.

B is the head portion thereof or the combustion chamber and is in axial alinement with the cylinder and, preferably, of somewhat less diameter than the cylinder in order that it may be made sufficiently long for the purposes of my invention without having unduly great capacity. This combustion chamber is water jacketed as shown, and the exterior wall being of cylindrical form and preferably of less diameter than the corresponding exterior wall of the water jacketed cylinder, thus permitting the use of valves of small diameter, and it is provided with the inlet port E and outlet port F.

C and D are cylindrical valves concentric with the combustion chamber and preferably, though not necessarily, both exterior thereto. The outer sleeve is provided with the inlet port G and the exhaust port H, while the interior sleeve D is provided with the inlet port I and the exhaust port J. The inner valve D has an end K formed thereon fitting closely on the top of the combustion chamber. The end is also provided with an integral extension or sleeve L above the end K and journaled on the boss M formed on the end of the cylinder. This boss provides means for the insertion of a spark plug. The outer valve C has an end N formed thereon fitting over the end K of the valve D. The end N is provided with an integral extension or sleeve O above the end N and journaled on the sleeve L. The sleeve L has an attachment or crank arm *b* formed thereon and the sleeve O the attachment or crank arm *c*. To these crank arms are pivotally connected respectively the connecting rods P and Q, the other ends of which are pivotally connected to the cranks S and R formed on the crank shaft T. This crank shaft is suitably journaled parallel to the axis of the cylinder and is driven by bevel gearing *d* from the motor shaft U. It will be noted that the cranks R and S are not in alinement, the crank S, driving the inner valve, being set at an angle of 135 degrees to the crank R, driving the outer sleeve. It will also be noted that the throw of the cranks R and S is considerably less than the throw of the crank arms *b* and *c*, consequently the rotation of the crank shaft T will produce a reciprocating rotary movement of the valves C and D. Owing to the setting of the cranks R and S, it will also be evident that the movements of the valves C and D are asynchronous, that is, that the reversals of the motion of each valve will take place at different times to the reversals of the movement of the other valve.

Reference to Figs. 4 and 7 of the drawings will also show that I make the ports in the two valves of different sizes. For instance, in Fig. 4, cylinder 1, it will be seen that the inlet port of the outer valve C is shorter than the inlet port of the inner valve D, while the exhaust ports in both valves are of substantially the same length, both being greater than the larger of the two inlet ports. By suitably proportioning the ports the time of opening the ports of the combustion chamber and the length of time they are open may be exactly adjusted.

Owing to the setting of the cranks R and S the suction stroke of cylinder 1 commences while both valves are moving in one direction; while when the port is closed, the outer valve is moving in the opposite direction; further when the suction stroke of the fourth cylinder commences the inner valve is almost stationary and the outer valve moving in the reverse direction to that in which it was moving at the commencement of the suction stroke in cylinder 1, consequently, the ports in cylinder 4 require to be differently proportioned, the inlet port in the outer valve being longer than the inlet port in the inner valve, while with the exhaust ports the reverse is the case.

The proportions of the ports in the various cylinders may be easily worked out by anyone skilled in the art. I show, however, as an illustration, in Figs. 4 to 7 the proportions of the ports in each valve for a four cylinder engine when the proportions and arrangement of the cranks are as shown in Fig. 3. In connection with each of these Figs. 4 and 7 I illustrate also the position of the centers of the crank shaft T and cranks R and S.

A reference to Fig. 3 will show that the valves of the various cylinders are connected by the coupling bars V, so that the similar valves in the various cylinders are moved synchronously. As the valves are in motion I provide exterior to the valve C the fixed casing W. This preferably fits closely over the top of the outer valve C, as shown, and is provided with the inlet port *f* and exhaust port *g* registering respectively with the inlet port E and exhaust port F of the combustion chamber. This casing holds the valves closely in place and is itself held down by the divided flanged ring X which is clamped in place to engage the flanges *x* and *y* formed on the casing and the outer wall of the cylinder respectively.

In order to make the moving parts gas tight without involving undue friction, I provide the annular elastic packing rings *e*. These it will be seen are fitted at the extreme ends of the valves. This arrangement is important as grooves will ultimately be worn by the packing rings in the faces of the parts moving over them and if the rings were not at the ends, as shown, the packing might ultimately lock the parts together and prevent the removal of the valves.

Longitudinal strips of packing, preferably metal, are preferably set in the walls of the combustion chamber at each side of each port bearing against the inner valve and extending above and below the port to meet the rings *e*. Similar strips are set in the inner valve at each side of the ports therein bearing on the outer valve. These strips prevent lateral leakage from the ports, end leaking being prevented by the rings.

From the above description it will be seen that the essential feature of the present invention lies in the use of the two reciprocating rotary valves asynchronously driven, so that the valves, when in motion, are moving either in opposite directions or in the same direction at different rates of speed, thus enabling me, by suitably proportioning the parts, to secure any desired timing of the opening and closing of the inlet and exhaust ports of the combustion chamber. Keeping this in mind many changes might be made in the exact arrangement and positioning of the valves and the method of driving the same.

What I claim as my invention is:—

1. In an internal combustion motor, the combination of a cylindrical combustion chamber having an inlet and an exhaust port formed in its sides, two cylindrical rotatable valves concentric with the combustion chamber and adapted to control the ports of the combustion chamber, means for imparting an asynchronous reciprocating rotary movement to said valves comprising a crank shaft, cranks formed thereon out of alinement with one another, cranks formed on the valves, and connecting rods between the cranks of the valves and the cranks of the crank shaft respectively.

2. In a multi-cylinder internal combustion motor, the combination of a plurality of cylinders each provided with a cylindrical combustion chamber having an inlet and an exhaust port formed in its sides, two cylindrical rotatable valves concentric with the combustion chamber and adapted to control the ports of the combustion chamber, a crank and coupling bar connection between the corresponding valves of the different cylinders, and means for imparting an asynchronous reciprocating movement to said coupling bars.

3. In an internal combustion motor, the combination of an exteriorly cylindrical combustion chamber having an inlet and an exhaust port formed in its sides, two cylindrical valve sleeves concentric with the combustion chamber and adapted to control the ports of the combustion chamber, and means for imparting an asynchronous reciprocating movement to said valves comprising a

crank shaft, cranks formed thereon out of alinement with one another, attachments formed on the valves, and connecting rods between the cranks and said attachments.

4. In an internal combustion motor, the combination of the cylinder having a combustion chamber of exterior cylindrical form, said chamber having an inlet and an exhaust port formed in its sides, two cylindrical rotatable valves concentric with the combustion chamber and adapted to control the ports thereof, and means for imparting an asynchronous reciprocating rotary movement to said valves.

5. In an internal combustion motor, the combination of the cylinder having a combustion chamber of exterior cylindrical form, said chamber having an inlet and an exhaust port formed in its sides, two cylindrical rotatable valves concentric with the combustion chamber and provided each with ports differing in size from the corresponding ports in the other valve and adapted to be brought into communication with the ports in the combustion chamber, and means for imparting an asynchronous reciprocating rotary movement to said valves.

6. In an internal combustion motor, the combination of a cylinder having a head portion of exterior cylindrical form, said head portion having an inlet and an exhaust port formed in its sides, two cylindrical concentrically arranged valve sleeves surrounding said head portion and adapted to control the ports thereof, said sleeves having integral extensions above the outer cylindrical wall of the head portion, operating attachments on said extensions, and means connected to said attachments for imparting an asynchronous reciprocating movement to said sleeves.

7. In an internal combustion motor, the combination of the cylinder having a combustion chamber of external cylindrical form, said chamber having an inlet and an exhaust port formed in its sides, a cylindrical rotatable valve sleeved on the outside of said combustion chamber and provided with ports adapted to be brought into communication with the ports of the combustion chamber, annular packing between the outer wall of the combustion chamber and said valve at the extreme end of the cylindrical part thereof, and means for imparting a rotative movement to said valve.

8. In an internal combustion motor, the combination of the cylinder having a combustion chamber of external cylindrical form, said chamber having an inlet and an exhaust port formed in its sides, a cylindrical rotatable valve sleeved on the outside of said combustion chamber and provided with ports adapted to be brought into communication with the ports of the combustion chamber, annular packing rings between the outer wall of the combustion chamber and said valve at the extreme ends of the cylindrical part thereof, and means for imparting a rotative movement to said valve.

9. In an internal combustion motor, the combination of the cylinder having a combustion chamber of exterior cylindrical form, said chamber having an inlet and an outlet port formed in its sides, two concentrically arranged cylindrical rotatable valves sleeved on the outside of said combustion chamber and provided with ports adapted to be brought into communication with the ports of the combustion chamber, annular packing between the outer wall of the combustion chamber and the inner valve at the extreme ends of the cylindrical part of the latter, and annular packing between the two valves at the extreme ends of the cylindrical parts thereof.

10. In an internal combustion engine, the combination with a cylinder having a head and a portion surrounding said head and forming therewith an annular valve chamber, said head having spaced inner and outer walls which are contracted relative to the corresponding walls of the cylinder, and said head and portion having registering intake ports and oppositely arranged registering exhaust ports, of a piston operating in said cylinder entirely below the lower end of said valve chamber, two concentric cylindrical sleeve valves located in said annular valve chamber and each provided with intake and exhaust ports adapted to register with the intake and exhaust ports respectively of said head and portion, and means for imparting an asynchronous reciprocating movement to said valves.

Toronto, Ont., this 20th day of October 1909.

DONALD J. McKINNON.

Signed in the presence of—
JOHN G. REDONT,
A. CAMPBELL.

A. LOOMIS.

DETACHABLE LIGHT FOR VEHICLE CURTAINS.

APPLICATION FILED NOV. 8, 1909.

1,125,352. Patented Jan. 19, 1915.

Fig. 1.

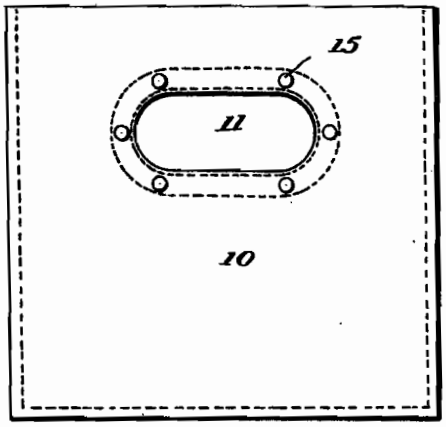

Fig. 2

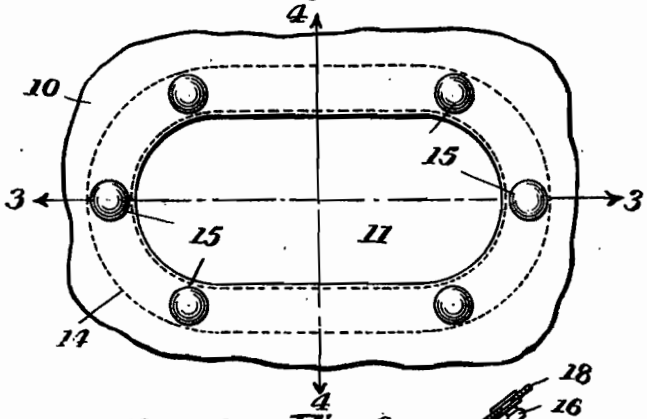

Fig. 4

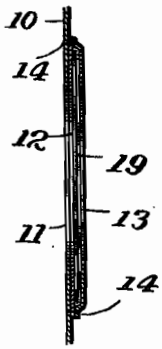

Fig. 3.

Fig. 5.

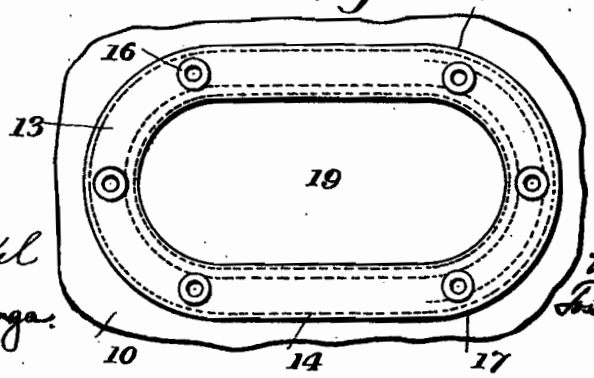

Witnesses
J. G. Stinkel
J. H. Bruninga.

Inventor
Allen Loomis
By
[illegible]
Attorneys

UNITED STATES PATENT OFFICE.

ALLEN LOOMIS, OF DETROIT, MICHIGAN, ASSIGNOR TO PACKARD MOTOR CAR COMPANY, OF DETROIT, MICHIGAN, A CORPORATION OF MICHIGAN.

DETACHABLE LIGHT FOR VEHICLE-CURTAINS.

1,125,352. Specification of Letters Patent. Patented Jan. 19, 1915.

Application filed November 8, 1909. Serial No. 526,831.

To all whom it may concern:

Be it known that I, ALLEN LOOMIS, a citizen of the United States, and resident of Detroit, county of Wayne, State of Michigan, have invented certain new and useful Improvements in Detachable Lights for Vehicle-Curtains, of which the following is a specification.

This invention relates to curtains for vehicles, and especially to those used in connection with motor vehicles.

It is desirable at times to roll up the vehicle curtains and move them out of the way, this being generally accomplished by rolling them up and securing them in position underneath the roof of the vehicle. Since these curtains are generally provided with lights, it is desirable that the latter may be detachably secured to the curtain body, so that they may be removed when the curtain is rolled up, or readily replaced when broken or scratched.

The object of this invention, therefore, is to construct a curtain in which the light may be quickly removed and again secured in place.

In the drawings: Figure 1 is a view of a curtain, showing the invention applied thereto. Fig. 2 is an enlarged view, showing the section of the curtain immediately surrounding the light. Fig. 3 is a section on the line 3—3 Fig. 2. Fig. 4 is a section on the line 4—4 Fig. 2, and Fig. 5 is a view of the reversed side of the curtain from that shown in Figs. 1 and 2.

Referring to the drawings, 10 designates a curtain body provided with an opening 11. A plurality of strips 12 and 13 are secured to the curtain body by means of rows of stitches 14, forming together a pocket. A plurality of snap fastener sockets 15 are secured to the curtain body, and extend through the strip 12. The strip 13 has secured thereto a plurality of heads 16, which coöperate with the sockets 15. The rows of stitches 14 extend through both of the strips 12 and 13 to points designated 17, 17 on Fig. 5. This construction leaves the right-hand end 18 of the upper strip free, so as to form a swinging flap. A suitable light 19, provided with a number of holes 20, is adapted to be placed in the pocket formed by the strips 12 and 13, the holes 20 alining with the snap fasteners. The light 19 is preferably flexible, and may be composed of celluloid, or any other flexible transparent material.

The light is secured in place by separating all of the coöperating heads 16 and sockets 15, and inserting it in place in the pocket formed by the strips 12 and 13, by separating the flap 18 from the body of the curtain, as shown in Fig. 3. After the light is in place the heads 16 are all snapped into locking engagement with the coöperating sockets 15, and the light will thus be securely held in place. Whenever it is desirable to roll up the curtain or replace a broken or scratched light the light is removed by disengaging the heads 16 from the sockets 15, and removing the light from the pocket through the open end formed by separating the flap 18 from the body member.

It is obvious that various changes may be made in the details of construction without departing from this invention, and it is, therefore, to be understood that this invention is not to be limited to the specific construction shown and described.

Having thus described my invention, what I claim is:—

1. The combination with a vehicle curtain provided with an opening and a light therefor, of a flexible strip around the opening secured to the curtain and forming with the curtain a pocket adapted to receive said light, a part of said strip being free from the curtain to permit the light to be inserted into and removed from the pocket, and snap fasteners comprising coöperating parts secured respectively to the curtain and said strip for connecting the free portions of the strip with the curtain to secure the light in the pocket.

2. The combination with a vehicle curtain provided with an opening and a light therefor having marginal openings therein, of a flexible strip around the opening secured to said curtain and forming with the curtain a

pocket adapted to receive said light, a part of said strip being free from the curtain to permit the light to be inserted into and removed from the pocket, and snap fasteners comprising coöperating parts secured respectively to the curtain and said strip, some of said parts extending through the marginal openings in the light and connecting the free portions of the strip with the curtain to secure the light in the pocket.

In testimony whereof I affix my signature in presence of two witnesses.

ALLEN LOOMIS.

Witnesses:

ERNEST H. KING,

E. N. HEARN.

M. TIBBETTS.

IGNITION APPARATUS FOR HYDROCARBON ENGINES.

APPLICATION FILED FEB. 19, 1910.

1,227,697.

Patented May 29, 1917.

4 SHEETS—SHEET 1.

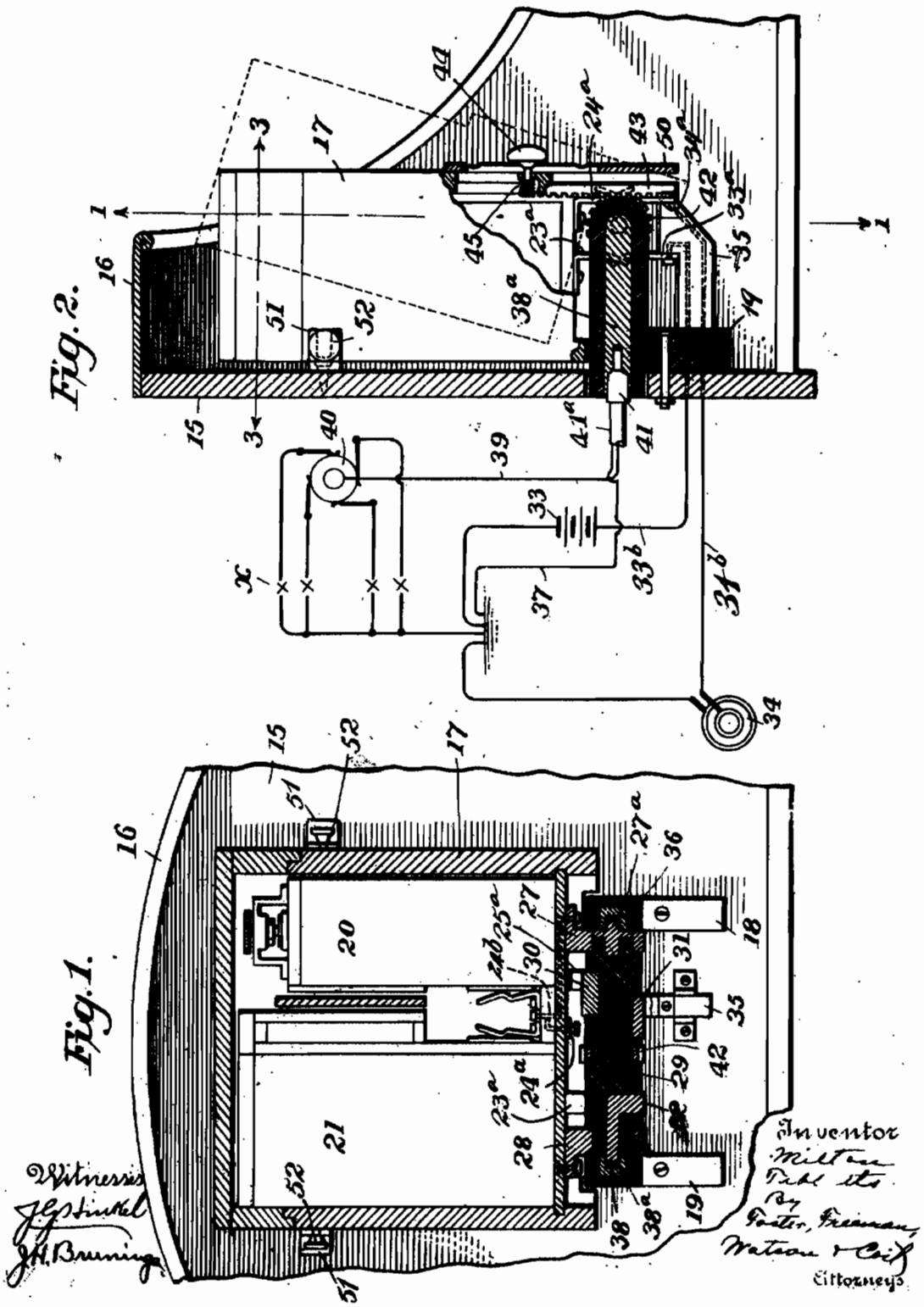

M. TIBBETTS.

IGNITION APPARATUS FOR HYDROCARBON ENGINES.

APPLICATION FILED FEB. 19, 1910.

1,227,697.

Patented May 29, 1917.

4 SHEETS—SHEET 2.

Fig. 3.

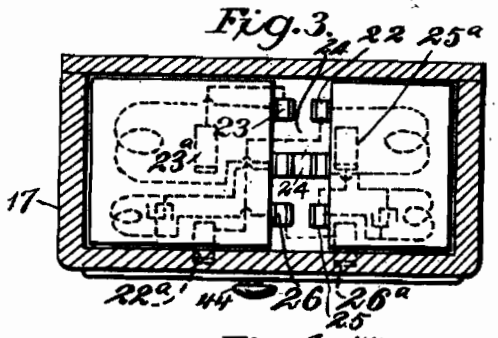

Fig. 4.

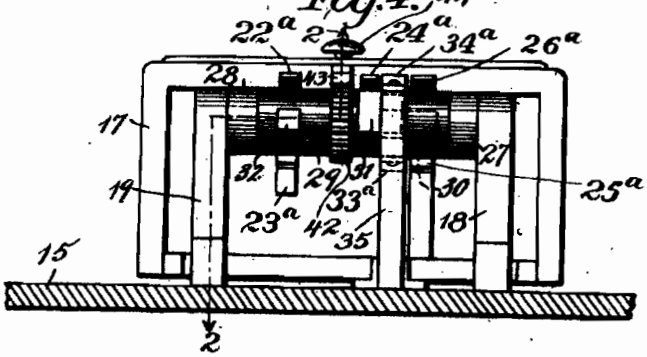

Fig. 5.

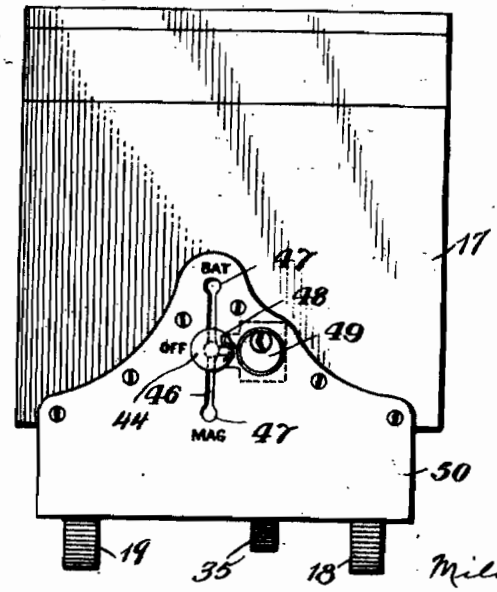

Witnesses

J. G. Sinkel

J. H. Bruninga.

Inventor

Milton Tibbetts

By

Foster, Freeman, Watson & Coe

Attorneys

M. TIBBETTS.

IGNITION APPARATUS FOR HYDROCARBON ENGINES.

APPLICATION FILED FEB. 19, 1910.

1,227,697. Patented May 29, 1917.

4 SHEETS—SHEET 3.

Fig. 7.

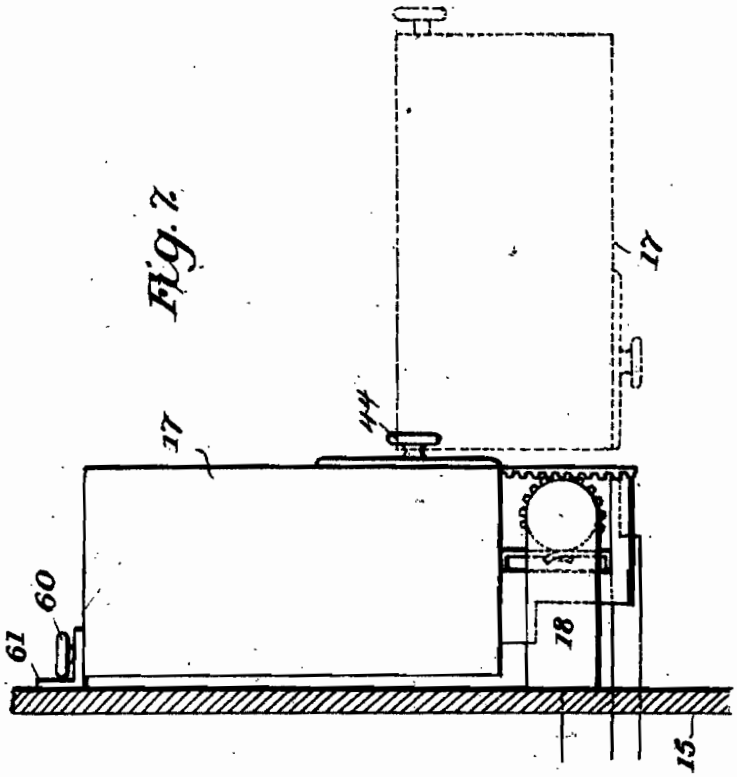

Fig. 6.

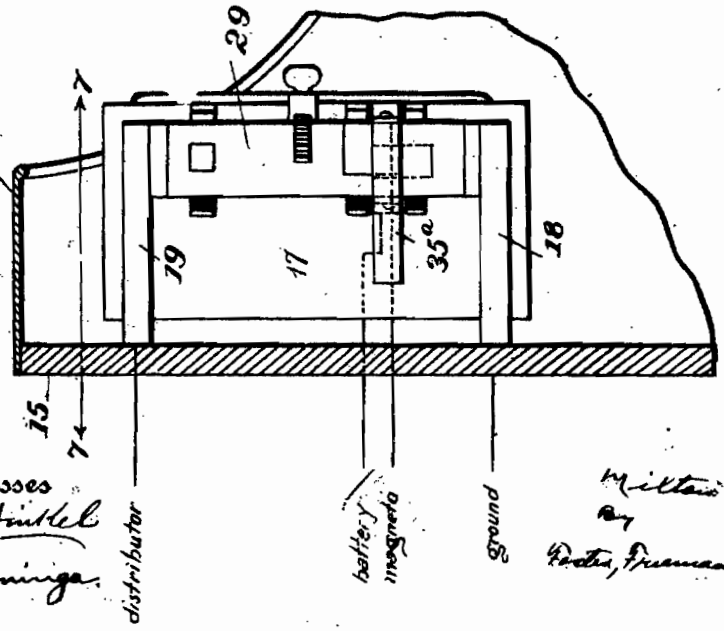

Witnesses

J. G. Sinkel

J. H. Bruninga

Inventor

Milton Tibbetts

By

Foster, Freeman, Watson & Coit

Attorneys

M. TIBBETTS.

IGNITION APPARATUS FOR HYDROCARBON ENGINES.

APPLICATION FILED FEB. 19, 1910.

1,227,697. Patented May 29, 1917.

4 SHEETS—SHEET 4.

Fig. 8.

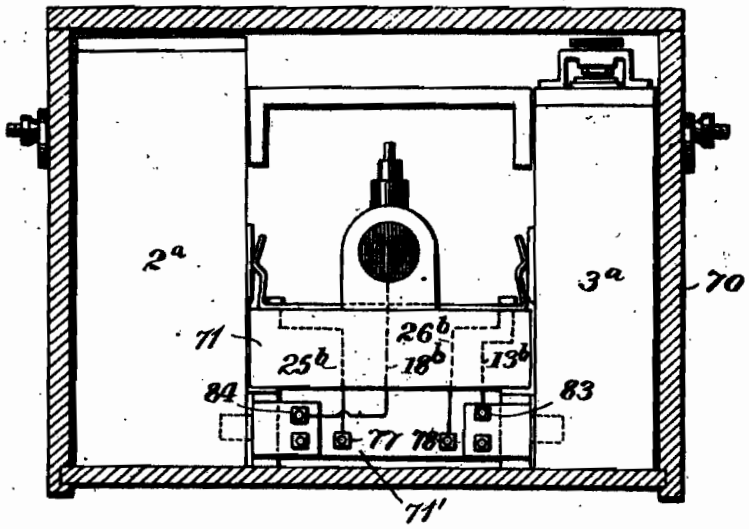

Fig. 10.

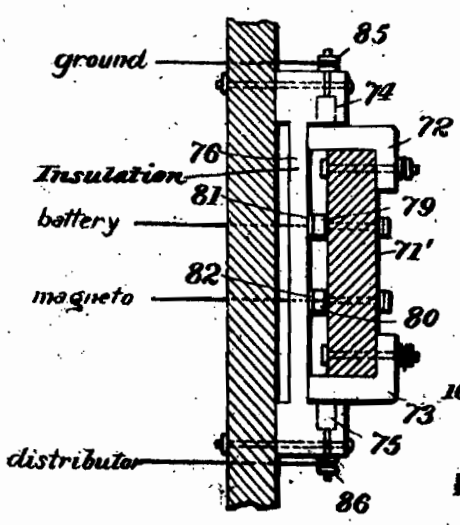

Fig. 9.

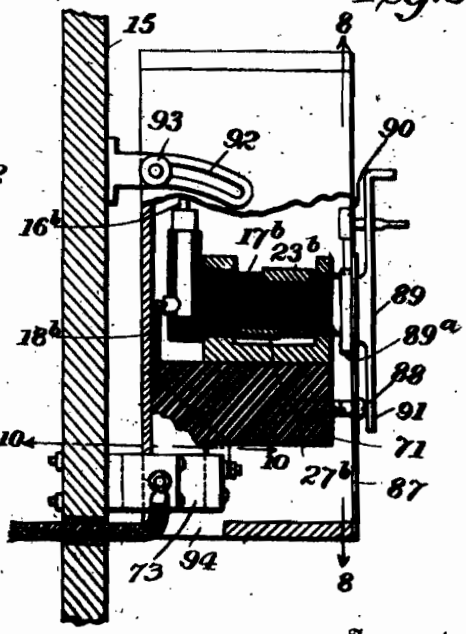

Witnesses

J. G. Stinkel

J. H. Bruninga

Inventor

Milton Tibbetts

By

Foster, Freeman, Watson & Coe

Attorneys

UNITED STATES PATENT OFFICE.

MILTON TIBBETTS, OF DETROIT, MICHIGAN, ASSIGNOR TO PACKARD MOTOR CAR COMPANY, OF DETROIT, MICHIGAN, A CORPORATION OF MICHIGAN.

IGNITION APPARATUS FOR HYDROCARBON-ENGINES.

1,227,697. Specification of Letters Patent. Patented May 29, 1917.

Application filed February 19, 1910. Serial No. 544,828.

To all whom it may concern:

Be it known that I, MILTON TIBBETTS, a citizen of the United States, and resident of Detroit, county of Wayne, State of Michigan, have invented certain new and useful Improvements in Ignition Apparatus for Hydrocarbon-Engines, of which the following is a specification.

This invention relates to ignition apparatus for hydrocarbon engines, and particularly to ignition apparatus for the engines of motor vehicles, although some of the features are not limited to this particular application.

The ignition apparatus of a motor vehicle is generally placed in a receptacle which is mounted on the dash of the motor vehicle. In view of the fact that a hood sometimes extends rearwardly over the dash, it is difficult to remove the apparatus from the receptacle since the hood interferes. It is generally necessary to remove the entire receptacle from the dash so that the apparatus may be removed therefrom.

One of the objects of this invention is to support the receptacle in such a manner that it may be moved to a position to clear the hood so that the apparatus may be readily removed.

Another object is to support the conductors and connections for the apparatus in such a manner that they will be efficiently insulated.

Another object is to improve the apparatus and receptacle in general.

Further objects will appear from the detailed description.

The invention will be described in connection with the accompanying drawings, in which:

Figure 1 is a section on the line 1—1 Fig. 2, parts of the apparatus being shown in elevation;

Fig. 2 is a section on the line 2—2 Fig. 4;

Fig. 3 is a section on the line 3—3 Fig. 2;

Fig. 4 is a bottom view, the dash being shown in section;

Fig. 5 is a front elevation;

Fig. 6 is an elevation showing another form of this invention;

Fig. 7 is a section on the line 7—7 Fig. 6;

Fig. 8 is a section on the line 8—8 Fig. 9, showing another form of this invention;

Fig. 9 is an elevation partly in section of the form shown in Fig. 8;

Fig. 10 is a section on the line 10—10 Fig. 9.

Referring to Figs. 1 to 5, 15 designates the dash of a motor vehicle, and 16 the overhanging hood. A receptacle 17 is pivotally supported, in a manner hereinafter described in detail, on brackets 18 and 19 secured to the dash, so that the receptacle may swing from full to dotted line position shown in Fig. 2. The receptacle is arranged to receive and support the usual ignition apparatus consisting of trembler coil 20 and transformer coil 21. The bottom wall of the receptacle is arranged to support a series of contacts 22, 23, 24, 25 and 26 and the coils are removably supported in the receptacle and provided with a series of contacts coöperating with the contacts 22 to 26, inclusive, this particular construction being shown and described in patent to Huff 838,251, granted December 11, 1906. As described in said patent, and as shown in Fig. 3, the contacts 22 and 23 connect with the high tension terminals of the coils, the contact 24 connects with the joined high and low tension terminals of the coils, and the contacts 25 and 26 connect with the other low tension terminals of the coils.

The contact 24 is connected with a brush 24^a and with a metallic bracket 27, secured to the bottom wall of the receptacle, by conductors indicated at 24^b in Fig. 1. A rotatable switch 29 is supported in the bracket 27 and another bracket 28, also mounted on and secured to the wall of the receptacle. This switch comprises a cylinder of insulating material provided with contact segments 30, 31 and 32. A pair of brushes 33^a and 34^a are supported on a bracket 35, (Fig. 2) which is mounted upon the dash of the vehicle. These brushes are electrically con-

nected to the battery 33 and the magneto 34 by conductors 33[b] and 34[b], respectively, passing through and supported by the bracket 35. Brushes 25[a], 26[a], 22[a] and 23[a] are supported from the bottom wall of the receptacle, and are arranged to bear upon the rotary switch 29. As shown in Fig. 3, the brushes 25[a] and 26[a] are electrically connected to the contacts 25 and 26, respectively, while the brushes 22[a] and 23[a] are electrically connected to the contacts 22 and 23 respectively. The arrangement of the brushes and their relative positions with respect to the contact segments on the switch is shown in Figs. 1 and 4. A pivot pin 27[a], for switch 29, is provided with a flange which constantly bears on and has an electrical connection with the metallic bracket 27. This pivot is mounted in a metallic bearing 36 of the bracket 18, which is of insulating material. The segment 32 is provided with an extension 38 forming a pivot, which is mounted in a bearing 38[a] of conducting material. The bearing members 36 and 38[a] have similar extensions through brackets 18 and 19, the extension on member 38[a] appearing in Fig. 2. The bearing member 38[a] is electrically connected to a distributer 40 by means of a suitable conductor 39. The connection between the parts 39 and 38[a] is preferably made by a plug switch arrangement 41, and the connection between the conductor 37, which is grounded and the member 36 is made by a similar plug switch 41[a]. The distributer 40 is arranged to successively connect the spark plugs of the hydrocarbon engine cylinders in a manner well known to those skilled in the art. In this particular embodiment, the invention is shown as applied to a four cylinder engine and the relative position of the distributer is shown in the diagrammatic portion of Fig. 2.

The switch 29 has secured thereto a toothed segment 42, which is arranged to mesh with a rack 43 guided in the front wall of the receptacle. The rack is operated by means of a button 44, the shank of which works in a slot 46 in a plate 50. The slot (see Fig. 5) is provided at its ends with depressions 47 and at an intermediate point with another notch or depression, all three of said depressions being adapted to receive the shank of the button which is provided with a spring 45, so as to latch the button and rack in the different positions. The button has formed thereon a lug 48, which is arranged to be engaged by the bolt of a lock 49.

The receptacle 17 is normally secured in place against the dash by means of the clamping nuts 52 and brackets 51. When it is desired to remove or replace the coils in the receptacle, the clamping nuts are loosened and the receptacle swung about the pivots 27[a] and 38 to dotted line position shown in Fig. 2. In this position the top of the receptacle will clear the hood 16 and, therefore, the coils may be readily removed. It will be noted that the pivots 27[a] and 38 are so arranged relatively to the receptacle 17 that the center of gravity of the receptacle will fall rearwardly and forwardly of the pivots when the receptacle is in the different positions shown in Fig. 2.

The operation of the switch 29 is similar to that shown in the Patent No. 838,251 referred to.

In order to connect the magneto in circuit, the button 44 is moved downwardly to the lower depression 47 or to "Mag" position. This will move the rack 43 downward, thus rotating the toothed segment 42 and thereby turning the switch 29, so that the segment 30 will be in a position to connect the brushes 26[a] and 34[a], which are side by side as shown in Fig. 4. At the same time the segment 32 will be moved into contact with brush 23[a] (Figs. 1, 2 and 4). The low tension current will then pass from the magneto by means of connection 34[b] to brush 34[a], then through segment 30, brush 26[a] to contact 26, which connects to the primary of the transformer, contact 24, connection 24[b] to bearing 36, plug 41[a] and connection 37 to ground. The high tension circuit will be made through the spark plugs, distributer 40, connection 39, bearing member 38[a], pivot 38, segment 32, brush 23[a], contact 23, the secondary of the transformer, contact 24, connection 24[b], bracket 27, bearing 36, plug 41[a], connection 37 to ground.

In order to throw the battery in circuit, the button 44 is moved to cause its shank to enter the upper notch 47 or to "Bat" position. Through rack 43 and toothed segment 42, this will rotate the switch 29 to cause the segment 30 to connect brushes 33[a] and 25[a] (Fig. 4) and turn segment 32 into position to contact with brush 22[a]. The connections may be traced in a manner similar to that for the magneto connections. When the battery is in circuit the segment 31 (Fig. 1) will connect the brushes 34[a] and 24[a] (Fig. 4) so that the magneto is short-circuited. That is, the circuit for the magneto will be from magneto by connection 34[b] to brush 34[a], segment 31, brush 24[a], connection 24[b], bracket 27, to bearing 36, plug 41[a], connection 37 to ground.

In order to throw the switch to neutral position the button 44 is moved to bring its shank into the intermediate notch or depression or to "off" position. This will disconnect both the battery and the magneto and will also break the high tension connections, the magneto remaining short circuited through the brushes 34[a] and 24[a] and segment

31, this segment subtending a greater angle than the other segments, so that it remains in contact with the brushes 34ᵃ and 24ᵃ whether the switch button 44 is in "Bat" or "off" position.

The segments 30, 31 and 32 are made long enough so that the connections of the apparatus will remain undisturbed—that is, the segments will remain in contact with the brushes with which they are engaged during the movements of the receptacle to operative and inoperative positions. It will be noted that the movement at the circumference of the switch will be relatively small.

By placing the switch outside of the box the coils can be placed close together, so that the size of the receptacle is very much reduced. The plate 50, which extends downwardly from the receptacle, forms a protective covering for the switch mechanism located below the receptacle. It is obvious that the receptacle may be extended downwardly so as to cover the switch at the sides and bottom as well as at the end.

The high tension connections, which require the most careful insulation due to the high voltage and due to the fact that one of the high tension terminals is grounded, are mounted in the brackets so that they may be carefully insulated from the ground—that is, from the motor frame. The entire high tension circuit is thus so designed that the insulation will be a maximum. The low tension terminals are mounted in a separate bracket which enables the connections to be conveniently made, and which keeps the low tension wires at a safe distance from the high tension wires so that they may be thoroughly insulated from each other.

In the construction shown in Fig. 1, the brackets are shown as mounted upon and secured to the dash. These brackets may, however, be mounted upon a subbase, which subbase is secured to the dash. The individual brackets form in fact together, one bracket having a plurality of bracket arms.

Another form of this invention is shown in Figs. 6 and 7. In this form the receptacle is mounted so as to swing on a vertical axis. The brackets 18 and 19 are secured to the dash as in the construction shown in Fig. 1, and the receptacle is mounted upon these brackets through the medium of the rotatable switch 29. In this construction, however, the bracket 35ᵃ, which carries the low tension wires and brushes, is secured to the receptacle as shown in Fig. 6. The receptacle swings about a vertical axis away from the dash so that the coils may be readily removed when said receptacle 17 is in the dotted line position shown in Fig. 7. The receptacle is secured in operative position against the dash by means of a clamping nut 60, engaging a slotted bracket 61 on the dash. The apparatus is otherwise of the same construction as that shown in Figs. 1 to 5 inclusive.

Another form of this invention is shown in Figs. 8, 9 and 10. The arrangement of the coils and switch in this form is similar to that shown in Patent No. 838,251 referred to, and therefore corresponding parts have been given the reference characters of parts in the above patent with an exponent added.

The receptacle 70 has mounted therein a transformer coil 2ᵃ and a trembler coil 3ᵃ. A bracket 71 of insulating material is suitably secured to the receptacle and supports the switch 17ᵇ. A downwardly extending portion 71′ of the bracket 71 (see Fig. 10) has secured thereto a plurality of L-shaped members 72 and 73, which have formed thereon trunnions 74 and 75 which engage bearings in a bracket 76. The L-shaped members 72 and 73 are of metal, while the bracket 76 is of insulating material. The switch 17ᵇ is provided with segments 23ᵇ and 27ᵇ, which engage brushes which are mounted upon the bracket 71. The brushes are arranged in the same manner as shown in Patent 838,251 referred to. A suitable connection 25ᵇ is made from a binding post 77 to a suitable battery brush which bears on the switch and a connection 26ᵇ is made from the binding post 78 to a suitable magneto brush which bears on the switch. Connections are made from the binding posts 77 and 78 to suitable spring contacts 79 and 80 engaging coöperating contacts 81 and 82 respectively, the spring contact 79 being mounted on the portion 71′ of the bracket while the coöperating contacts 81 and 82 are mounted on the bracket 76. The contacts 81 and 82 are arranged to be connected to the battery and magneto respectively as indicated in Fig. 10. An electrical connection extends from the binding post 84 on the L-shaped member 73, Fig. 8, to the contact member 18ᵇ, Fig. 9, while the ground connection is made to the binding post 83 on the L-shaped member 72. A binding post 85 for the ground connection is mounted on the bracket 76 and the shank of the binding post is arranged to make an electrical connection with the trunnion 74. Similarly the binding post 86 for the distributer is arranged to have an electrical connection with the trunnion 75. The electrical connections between the trunnions and the binding posts may be made in any suitable manner.

It will be seen that binding posts 77, 78, 83 and 84 form what may be termed a connecting board. In order that these binding posts may be accessible, the front of the receptacle is provided with a removable plate 87 which is secured to the receptacle

by one or more screws 88. A handle 89 is pivotally mounted on the casing and connected to the switch as in the patent referred to. In the construction shown, the handle is mounted in a bearing aperture in the plate 87, a flange 89ª forming a stop to hold it in position. This handle is arranged to be locked in "off" position by means of a lock 90, the handle having a key hole which registers with the key hole in the lock when the handle is in "off" position. The handle has a downwardly projecting portion 91 which covers the head of the screw 88. By means of the above construction when the plate is in place and the handle 89 is locked, the extension 91 will cover the head of the screw 88, and thus will prevent removal of the plate 87 so that the connecting board cannot be tampered with.

The receptacle swings about the trunnions 74 and 75 as an axis, and is locked in position by means of clamping nuts 93 engaging the slotted brackets 92. The lower end of the receptacle is cut away as at 94, so that the receptacle may be placed in position between its trunnions on the bracket 76. It will be noted that the bracket 76 extends into the receptacle.

It is obvious that various changes may be made in the details of construction without departing from this invention, and it is, therefore, to be understood that this invention is not to be limited to the specific construction shown and described.

Having thus described the invention, what is claimed is:

1. In a motor vehicle, the combination with the dash and ignition apparatus, of a receptacle for the ignition apparatus, and means including a pivot for supporting said receptacle and constructed to permit it to be tilted from an upright to an inclined position, said supporting means being constructed so that the center of gravity of said receptacle will fall forwardly and rearwardly of said pivot when said receptacle is in operative and inoperative positions respectively.

2. In a motor vehicle, the combination with the dash and ignition apparatus, of a receptacle for the ignition apparatus, means for supporting said receptacle, said means being constructed to permit said receptacle to be moved rearwardly from the dash, and electrical connections for said apparatus made through said supporting means.

3. In a motor vehicle, the combination with the dash and ignition apparatus, of a receptacle for the ignition apparatus, means for supporting said receptacle, said means being constructed to permit said receptacle to be moved rearwardly from the dash, and high tension electrical connections for said apparatus made through said supporting means.

4. In a motor vehicle, the combination with the dash and ignition apparatus, of a receptacle for the ignition apparatus, a bracket for supporting said receptacle, said bracket being constructed to permit said receptacle to be moved rearwardly from the dash, and electrical connections for said apparatus supported by said bracket.

5. In a motor vehicle, the combination with the dash and ignition apparatus, of a receptacle for the ignition apparatus, a bracket for supporting said receptacle, said bracket being constructed to permit said receptacle to be moved rearwardly from the dash, and high tension electrical connections for said apparatus supported by said bracket.

6. In a motor vehicle, the combination with the dash and ignition apparatus, of a receptacle for the ignition apparatus, a bracket for supporting said receptacle, said bracket being constructed to permit said receptacle to be moved rearwardly from the dash, electrical connections supported by said bracket, electrical connections for said apparatus supported by said receptacle and a sliding engagement between said connections.

7. In a motor vehicle, the combination with the dash and ignition apparatus, of a receptacle for the ignition apparatus, a bracket for supporting said receptacle, said bracket being constructed to permit said receptacle to be moved rearwardly from the dash, electrical connections supported by said bracket, electrical connections for said apparatus supported by said receptacle, said connections remaining undisturbed during the movements of said receptacle.

8. In a motor vehicle, the combination with the dash and ignition apparatus, of a receptacle for the ignition apparatus, means for supporting said receptacle, said means being constructed to permit said receptacle to be moved rearwardly from the dash, electrical connections supported by said dash, electrical connections for said apparatus supported by said receptacle, and a sliding engagement between said connections.

9. In a motor vehicle, the combination with the dash and ignition apparatus, of a receptacle for the ignition apparatus, means including a pivot connection for supporting said receptacle, said means being constructed to permit said receptacle to be swung rearwardly from said dash, and electrical connections to said apparatus made through said pivotal connection.

10. In a motor vehicle, the combination with the dash and ignition apparatus, of a

receptacle for the ignition apparatus, means including a pivotal connection for supporting said receptacle, said means being constructed to permit said receptacle to be swung rearwardly from said dash, and high tension electrical connections to said apparatus made through said pivotal connection.

11. In a motor vehicle, the combination with the dash and ignition apparatus, of a receptacle for the ignition apparatus, a bracket, a pivotal connection between said bracket and receptacle whereby said receptacle may be swung rearwardly from said dash, and electrical connections to said apparatus made through said pivotal connection.

12. In a motor vehicle, the combination with the dash and ignition apparatus, of a receptacle for the ignition apparatus, a bracket, a conducting bearing in said bracket, a conducting pivot on said receptacle and mounted in said bearing, and an electrical connection from said pivot to said apparatus.

13. In a motor vehicle, the combination with the dash and ignition apparatus, of a receptacle for the ignition apparatus, a bracket secured to said dash, a conducting bearing in said bracket, a conducting pivot on said receptacle and mounted in said bearing, an electrical connection from said pivot to said apparatus, and electrical connections from said bearing to the forward side of said dash.

14. In a motor vehicle, the combination with the dash and ignition apparatus, of a receptacle for the ignition apparatus, a bracket secured to said dash, a conducting bearing in said bracket, a conducting support on said receptacle movably mounted in said bearing, and constructed to permit said receptacle to be moved rearwardly of said dash, electrical connections from said pivot to said apparatus, and electrical connections from said bearing to the forward side of said dash.

15. In a motor vehicle, the combination with the dash and ignition apparatus, of a receptacle for the ignition apparatus, and means including a switch for said apparatus supporting said receptacle, said means being constructed to permit said receptacle to be moved rearwardly from the dash.

16. In a motor vehicle, the combination with the dash and ignition apparatus, of a receptacle for the ignition apparatus, a bracket, and a switch for said apparatus secured to said receptacle and having engagement with said bracket, said bracket and switch being constructed to permit said receptacle to be moved rearwardly from the dash.

17. In a motor vehicle, the combination with the dash and ignition apparatus, of a receptacle for the ignition apparatus, means for supporting said receptacle, said means being constructed to permit said receptacle to be moved rearwardly from the dash, a switch for said apparatus, said switch being mounted on said receptacle and provided with contacts, a bracket, and contacts on said bracket engaging the switch contacts.

18. In a motor vehicle, the combination with the dash and ignition apparatus, of a receptacle for the ignition apparatus, means for supporting said receptacle, said means being constructed to permit said receptacle to be moved rearwardly from the dash, a rotatable switch for said apparatus, said switch being mounted on said receptacle and provided with contact segments, a bracket, and brushes on said bracket engaging said segments.

19. In a motor vehicle, the combination with the dash and ignition apparatus, of a receptacle for the ignition apparatus, a bracket on said dash constructed to support said receptacle and permit it to be moved rearwardly from the dash, a switch for said apparatus, said switch being provided with contacts, and a bracket on the dash provided with contacts engaging the switch contacts.

20. In a motor vehicle, the combination with the dash and ignition apparatus, of a receptacle for the ignition apparatus, a bracket constructed to support said receptacle and permit it to be moved rearwardly from the dash, an additional bracket, and electrical connections for said apparatus supported by said brackets.

21. In a motor vehicle, the combination with the dash and ignition apparatus, of a receptacle for the ignition apparatus, a bracket constructed to support said receptacle and permit it to be moved rearwardly from the dash, an additional bracket, and electrical connections for said apparatus supported by said brackets, said connections remaining undisturbed during the movements of said receptacle.

22. In a motor vehicle, the combination with the dash and ignition apparatus, of a receptacle for the ignition apparatus, a plurality of brackets, means for supporting said receptacle on a pair of said brackets, said means being constructed to permit said receptacle to be moved rearwardly from the dash, and high tension electrical connections from said apparatus supported by a pair of said brackets.

23. In a motor vehicle, the combination with the dash and ignition apparatus, of a receptacle for the ignition apparatus, a plurality of brackets, means for supporting said receptacle on a pair of said brackets,

said means being constructed to permit said receptacle to be moved rearwardly from the dash, high tension electrical connections for said apparatus supported by a pair of said brackets, and low tension electrical connections from said apparatus supported by another of said brackets.

24. In a motor vehicle, the combination with the dash and ignition apparatus, of a receptacle for the ignition apparatus, a pair of brackets, means on said brackets for supporting said receptacle, said means being constructed to permit said receptacle to be moved rearwardly from the dash, high tension electrical connections supported by said brackets, a bracket intermediate said brackets, and low tension electrical connections supported by said intermediate bracket.

25. In a motor vehicle, the combination with the dash and ignition apparatus, of a receptacle, a spark coil within said receptacle, a switch for completing the circuits of said coil, a bracket for supporting said receptacle constructed to permit it to be moved rearwardly from the dash, means for mounting said switch on one of the outside walls of said receptacle, and a protecting plate for said switch secured to said receptacle.

26. In a motor vehicle, the combination with the dash and ignition apparatus, of a receptacle for the ignition apparatus, a bracket extending into the receptacle, and means on the bracket and in the receptacle constructed to permit said receptacle to be moved rearwardly from the dash.

27. In a motor vehicle, the combination with the dash, of an ignition apparatus comprising a receptacle, a spark coil in said receptacle, a switch for completing the circuit of said coil, a base for supporting said switch, a bracket, and means pivotally connecting said bracket and base and adapted to permit the receptacle to be moved rearwardly from the dash.

28. In a motor vehicle, the combination with the dash and ignition apparatus, of a receptacle for the ignition apparatus, trunnions for supporting said receptacle constructed to permit it to swing away from the dash, and electrical connections made through said trunnions.

29. In a motor vehicle, the combination with the dash and ignition apparatus, of a receptacle for the ignition apparatus, a bracket, trunnions secured to said receptacle and journaled in said bracket at points within the receptacle, said parts being constructed to permit said receptacle to swing away from the dash of the vehicle.

30. In a motor vehicle, the combination with a dash and ignition apparatus, of a receptacle for the ignition apparatus, a bracket, means for supporting said receptacle on said bracket constructed to permit said receptacle to move rearwardly of the dash, and means whereby placing said receptacle in position on the bracket makes the electrical connections.

31. In a motor vehicle, the combination with the dash and ignition apparatus, of a receptacle for the ignition apparatus, a bracket, means for supporting said receptacle on said bracket constructed to permit said receptacle to move rearwardly of the dash, and coöperating high and low tension contacts on said receptacle and bracket, whereby electrical connections are made when said receptacle is placed in position in its bracket.

32. In a motor vehicle, the combination with the dash and ignition apparatus, of a receptacle for the ignition apparatus, a bracket for supporting said receptacle, coöperating contacts on said receptacle and bracket, whereby electrical connections are made when said receptacle is placed in position in its bracket.

33. The combination of a receptacle and a bracket, means for pivotally supporting said receptacle on said bracket, the center of gravity of said receptacle positioned above and on one side of the axis of the pivot when the receptacle is in a substantially upright position, and on the other side of the axis when the receptacle is rotated on its pivot.

In testimony whereof I affix my signature in presence of two witnesses.

MILTON TIBBETTS.

Witnesses:
MARY L. GILDEMEISTER,
E. N. HEARN.

A. LOOMIS.

FRAME CROSS BAR AND MUD APRON.

APPLICATION FILED MAR. 8, 1910.

1,175,964.

Patented Mar. 21, 1916.

2 SHEETS—SHEET 1.

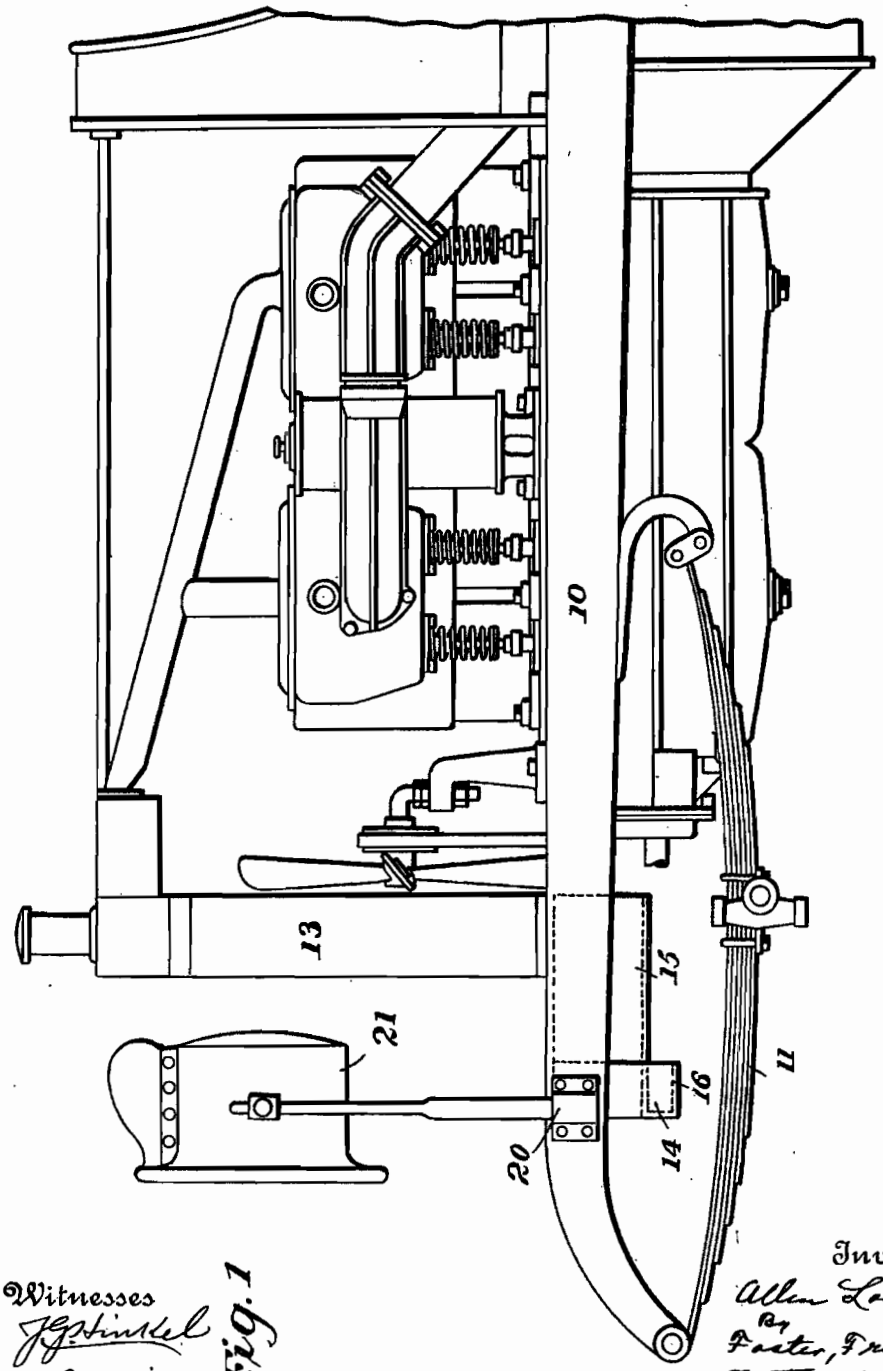

Witnesses
J. G. Hinkel
J. H. Bruninga

Fig. 1

Inventor
Allen Loomis
By
Foster, Freeman,
Watson & Coit
Attorneys

THE COLUMBIA PLANOGRAPH CO., WASHINGTON, D. C.

A. LOOMIS.

FRAME CROSS BAR AND MUD APRON.

APPLICATION FILED MAR. 8, 1910.

1,175,964.

Patented Mar. 21, 1916.

2 SHEETS—SHEET 2.

Fig. 2

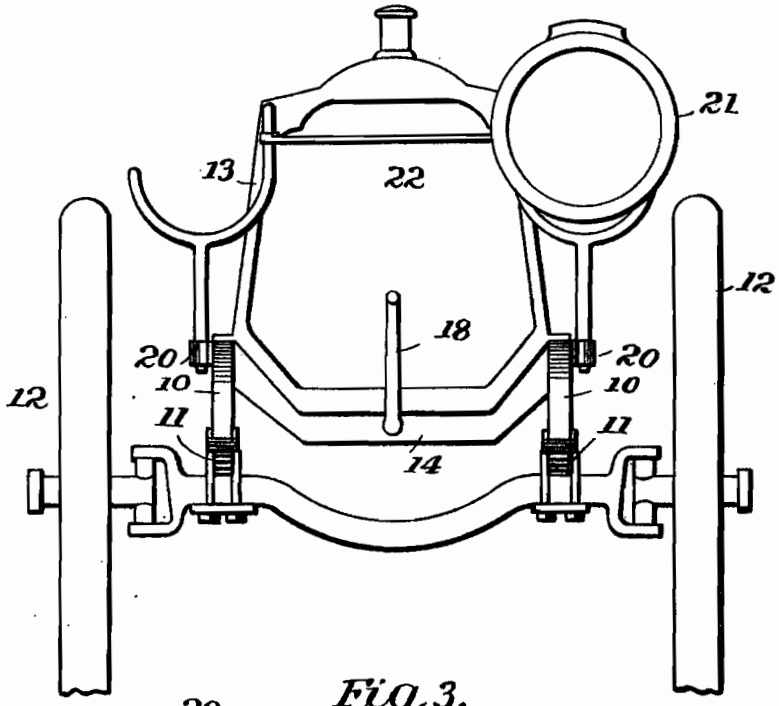

Fig. 3.

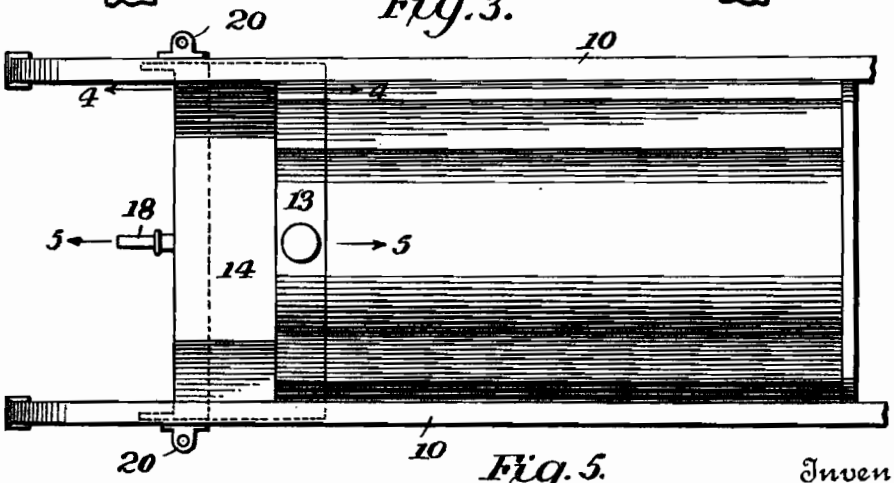

Fig. 4.

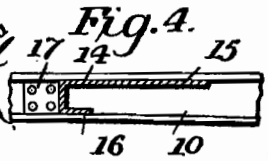

Fig. 5.

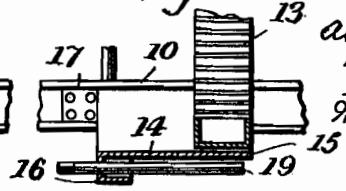

Witnesses

J. G. Hinkel

J. H. Bruninga

Inventor

Allen Loomis

By Foster, Freeman, Watson & Coit

Attorneys

THE COLUMBIA PLANOGRAPH CO., WASHINGTON, D. C.

UNITED STATES PATENT OFFICE.

ALLEN LOOMIS, OF DETROIT, MICHIGAN, ASSIGNOR TO PACKARD MOTOR CAR COMPANY, OF DETROIT, MICHIGAN, A CORPORATION OF MICHIGAN.

FRAME CROSS-BAR AND MUD-APRON.

1,175,964. Specification of Letters Patent. Patented Mar. 21, 1916.

Application filed March 8, 1910. Serial No. 548,062.

To all whom it may concern:

Be it known that I, ALLEN LOOMIS, a citizen of the United States, and resident of Detroit, county of Wayne, State of Michigan, have invented certain new and useful Improvements in Frame Cross-Bars and Mud-Aprons, of which the following is a specification.

This invention relates to motor vehicles and particularly to the frame construction. In motor vehicles as now constructed it is found that the lamps are subjected to considerable vibration which is transmitted from the frame. The radiator is also exposed to mud and water thrown up against the same by the road wheels, resulting in clogging of the radiator.

One of the objects of this invention is to construct a frame, brace it, and support the lamps in such a manner from the frame that the vibration is prevented.

Another object is to provide a mud apron which will protect the radiator.

Further objects will appear from the detailed description.

The invention will be described in connection with the accompanying drawings, in which—

Figure 1 is a side elevation of a part of a motor vehicle; Fig. 2 is a front elevation; Fig. 3 is a plan view; Fig. 4 is a section on the line 4—4 Fig. 3; Fig. 5 is a section on the line 5—5 Fig. 3.

Referring to the drawings, 10 designates the side members of a motor vehicle frame, 11 the springs, and 12 the road wheels. A radiator 13 is supported by the side members and as usual is located forwardly of the engine, which is covered by a hood. A cross member or bar 14 connects the side members 10. This cross member is located forwardly of the radiator and is of channeled section, one of the flanges 15 being wider than the other flange 16. The cross member is of the construction shown in Fig. 2, and the flange 15 extends rearwardly and underneath the radiator 13, as shown in Fig. 5. The cross member is secured to the side members in any suitable manner. In the specific embodiment shown the connection is made by fasteners passing through the side members and lugs 17 which are formed on the cross member. The starting crank 18 has its shaft extending through the web of the cross member, as shown in Figs. 2 and 5.

Lamp brackets 20 are secured to the side member at the points of attachment of the cross member. In the specific embodiment shown some of the fastening means pass through the lugs 17, the side members 10 and the brackets 20. The standards for the lamps 21 are supported in these brackets and in order to additionally brace the lamps the standards are connected by a bar 22. The widened flange 15 of the cross member forms a mud guard or apron, which will protect the radiator against the mud and water thrown up by the road wheels. In this way clogging of the radiator is prevented. The starting crank is placed in an accessible position so that it will not interfere with the mud apron. By placing the lamp brackets at the points of attachment of the cross member with the side members the vibration is reduced to a minimum. It is necessary to place these lamps forwardly of the radiator in order that the lamps may clear the same. Where the cross member is placed directly underneath the radiator as in prior constructions, the side members will vibrate considerable at the points where the lamp brackets are attached to the same, since this vibration will naturally take place about the connection between the side members and the cross members as an axis. In this construction the lamp brackets are attached at points where the vibration is a minimum.

It is obvious that various changes may be made in the details of construction without departing from this invention, and it is, therefore, to be understood that this invention is not to be limited to the specific construction shown and described.

Having thus described the invention, what is claimed is:

1. In a motor vehicle, the combination with the side members of the frame and the radiator supported near one end of the frame, of a cross member connecting the side members forward of the radiator and comprising a channel section having its web secured to the side members and having one of its flanges extending rearwardly to the radiator.

2. In a motor vehicle, the combination with frame side members, of a radiator supported by the frame, a cross member comprising a channel section and forming a part of the vehicle frame, one of the flanges of

said cross member being wide and forming a mud apron, lamp brackets supported by the side members, and fastenings passing through said lamp brackets, side members and cross member.

3. In a motor vehicle, the combination with side members, of a radiator supported by said side members, a cross member comprising a channel section and forming a part of the vehicle frame, one of the flanges of said cross member being wide and forming a mud apron, and a starting crank having a shaft extending through the web of said channel section.

In testimony whereof I affix my signature in presence of two witnesses.

ALLEN LOOMIS.

Witnesses:
E. N. HEARN,
M. F. SHAFER.

Copies of this patent may be obtained for five cents each, by addressing the "Commissioner of Patents, Washington, D. C."

DESIGN.

S. D. WALDON.

VEHICLE BODY.

APPLICATION FILED APR. 11, 1910.

41,544. Patented July 4, 1911.

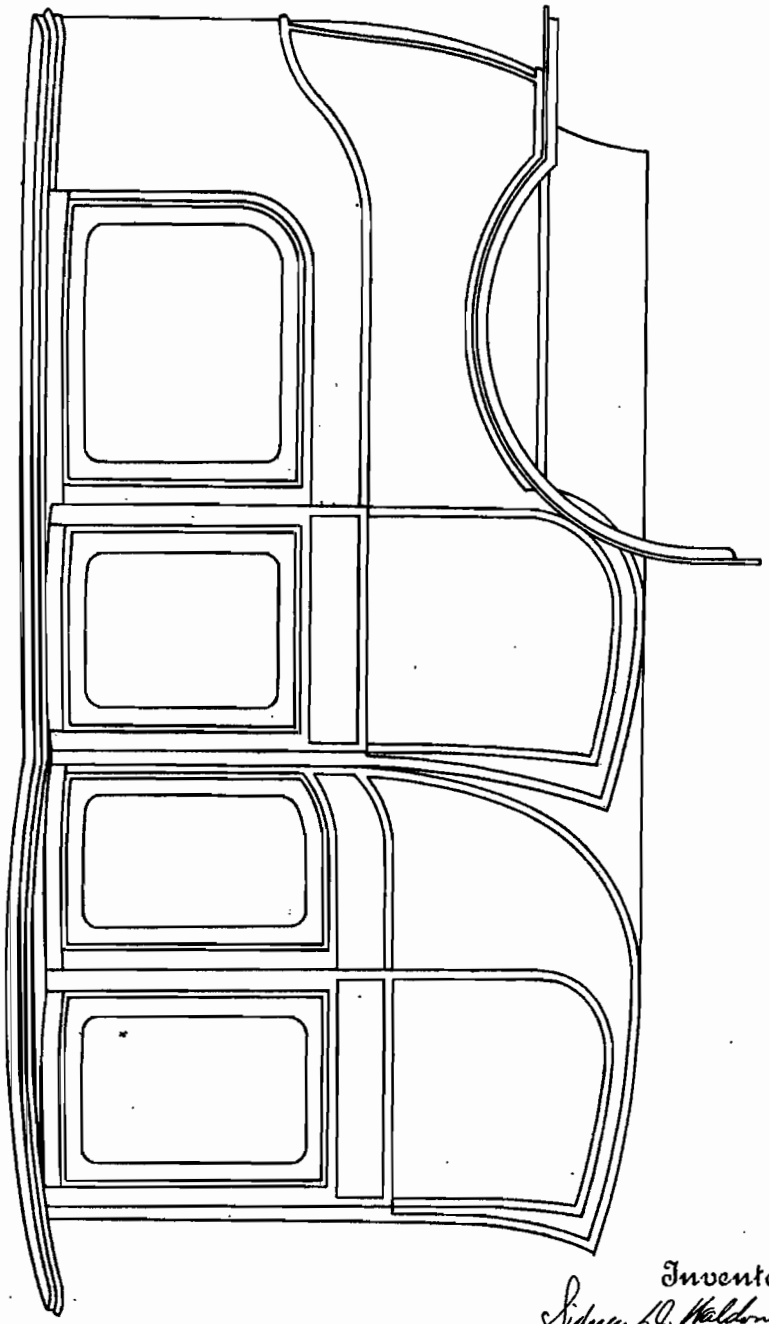

Witnesses
J. G. Stinkel
Milton Ottenberg.

Inventor
Sidney D. Waldon.
by Foster Freeman Watson Hart
Attorneys

COLUMBIA PLANOGRAPH CO., WASHINGTON, D. C.

UNITED STATES PATENT OFFICE.

SIDNEY D. WALDON, OF DETROIT, MICHIGAN, ASSIGNOR TO PACKARD MOTOR CAR COMPANY, OF DETROIT, MICHIGAN, A CORPORATION OF MICHIGAN.

DESIGN FOR A VEHICLE-BODY.

41,544. Specification for Design. Patented July 4, 1911.

Application filed April 11, 1910. Serial No. 554,886. Term of patent 7 years.

To all whom it may concern:

Be it known that I, SIDNEY D. WALDON, a citizen of the United States, residing at Detroit, in the county of Wayne and State of Michigan, have invented a new, original, and ornamental Design for a Vehicle-Body, of which the following is a specification, reference being had to the accompanying drawing, forming a part thereof.

The figure is a side elevation of a vehicle body showing my new design.

I claim—

The ornamental design for a vehicle body as shown.

SIDNEY D. WALDON.

Witnesses:

G. L. LOOMIS,

N. V. LAMEY.

Copies of this patent may be obtained for five cents each, by addressing the "Commissioner of Patents, Washington, D. C."

D41546 D12/91

DESIGN.

S. D. WALDON.

VEHICLE BODY.

APPLICATION FILED APR. 13, 1910.

41,546. Patented July 4, 1911.

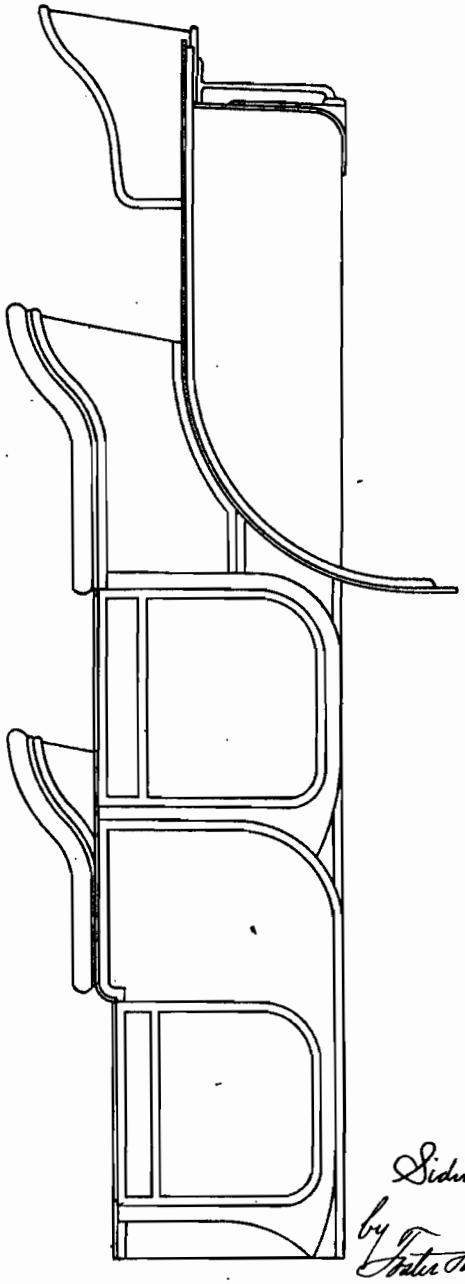

Witnesses
J. G. Stinkel
Milton Ottenberg

Inventor
Sidney D. Waldon
by Foster Freeman Watson & Coit
Attorneys

COLUMBIA PLANOGRAPH CO., WASHINGTON, D. C.

UNITED STATES PATENT OFFICE.

SIDNEY D. WALDON, OF DETROIT, MICHIGAN, ASSIGNOR TO PACKARD MOTOR CAR COMPANY, OF DETROIT, MICHIGAN, A CORPORATION OF MICHIGAN.

DESIGN FOR A VEHICLE-BODY.

41,546. Specification for Design. Patented July 4, 1911.

Application filed April 13, 1910. Serial No. 555,316. Term of patent 7 years.

To all whom it may concern:

Be it known that I, SIDNEY D. WALDON, a citizen of the United States, residing at Detroit, in the county of Wayne and State of Michigan, have invented a new, original, and ornamental Design for a Vehicle-Body, of which the following is a specification, reference being had to the accompanying drawing, forming a part thereof.

The figure is a side elevation of a vehicle body showing my new design.

I claim—

The ornamental design for a vehicle body as shown.

SIDNEY D. WALDON.

Witnesses:

G. L. LOOMIS,

N. V. LAMEY.

Copies of this patent may be obtained for five cents each, by addressing the "Commissioner of Patents, Washington, D. C."

DESIGN.

S. D. WALDON.

VEHICLE BODY.

APPLICATION FILED APR. 14, 1910.

41,547. Patented July 4, 1911.

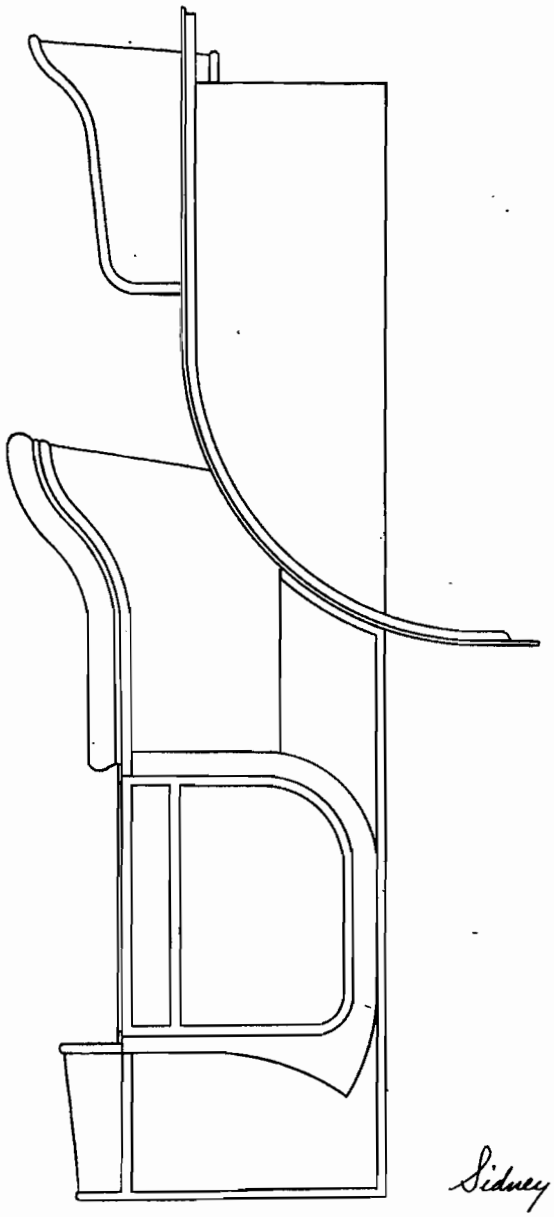

Witnesses
J. G. Stinkel
Milton Ottenberg.

Inventor
Sidney D. Waldon
by Foster Freeman Watson & Coit
Attorneys

COLUMBIA PLANOGRAPH CO., WASHINGTON, D. C.

UNITED STATES PATENT OFFICE.

SIDNEY D. WALDON, OF DETROIT, MICHIGAN, ASSIGNOR TO PACKARD MOTOR CAR COMPANY, OF DETROIT, MICHIGAN, A CORPORATION OF MICHIGAN.

DESIGN FOR A VEHICLE-BODY.

41,547. Specification for Design. Patented July 4, 1911.

Application filed April 14, 1910. Serial No. 555,551. Term of patent 7 years.

To all whom it may concern:

Be it known that I, SIDNEY D. WALDON, a citizen of the United States, residing at Detroit, in the county of Wayne and State of Michigan, have invented a new, original, and ornamental Design for a Vehicle-Body, of which the following is a specification, reference being had to the accompanying drawing, forming a part thereof.

The figure is a side elevation of a vehicle body showing my new design.

I claim—

The ornamental design for a vehicle body as shown.

SIDNEY D. WALDON.

Witnesses:

G. L. LOOMIS,

N. V. LAMEY.

Copies of this patent may be obtained for five cents each, by addressing the "Commissioner of Patents, Washington, D. C."

DESIGN.

S. D. WALDON.

VEHICLE BODY.

APPLICATION FILED APR. 15, 1910.

41,548. Patented July 4, 1911.

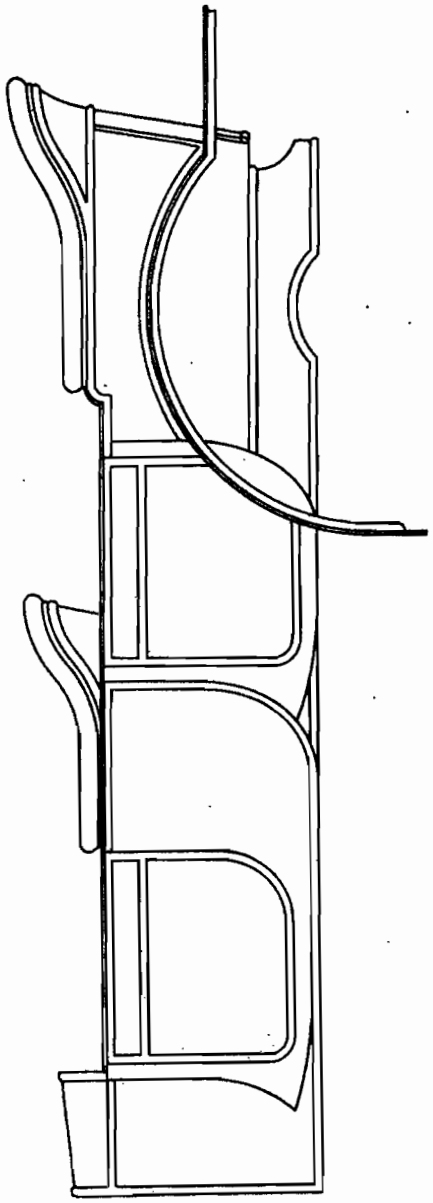

Witnesses
J. G. Stinkel
Milton Ottenberg

Inventor
Sidney D. Waldon
by Foster Freeman Watson & Coit
Attorneys

COLUMBIA PLANOGRAPH CO., WASHINGTON, D. C.

UNITED STATES PATENT OFFICE.

SIDNEY D. WALDON, OF DETROIT, MICHIGAN, ASSIGNOR TO PACKARD MOTOR CAR COMPANY, OF DETROIT, MICHIGAN, A CORPORATION OF MICHIGAN.

DESIGN FOR A VEHICLE-BODY.

41,548. Specification for Design. Patented July 4, 1911.

Application filed April 15, 1910. Serial No. 555,745. Term of patent 7 years.

To all whom it may concern:

Be it known that I, SIDNEY D. WALDON, a citizen of the United States, residing at Detroit, in the county of Wayne and State of Michigan, have invented a new, original, and ornamental Design for a Vehicle-Body, of which the following is a specification, reference being had to the accompanying drawing, forming a part thereof.

The figure is a side elevation of a vehicle body showing my new design.

I claim—

The ornamental design for a vehicle body as shown.

SIDNEY D. WALDON.

Witnesses:

G. L. LOOMIS,

N. V. LAMEY.

Copies of this patent may be obtained for five cents each, by addressing the "Commissioner of Patents. Washington, D. C."

R. HUFF.

CLUTCH MECHANISM.

APPLICATION FILED APR. 18, 1910.

1,122,119.

Patented Dec. 22, 1914

2 SHEETS-SHEET 1.

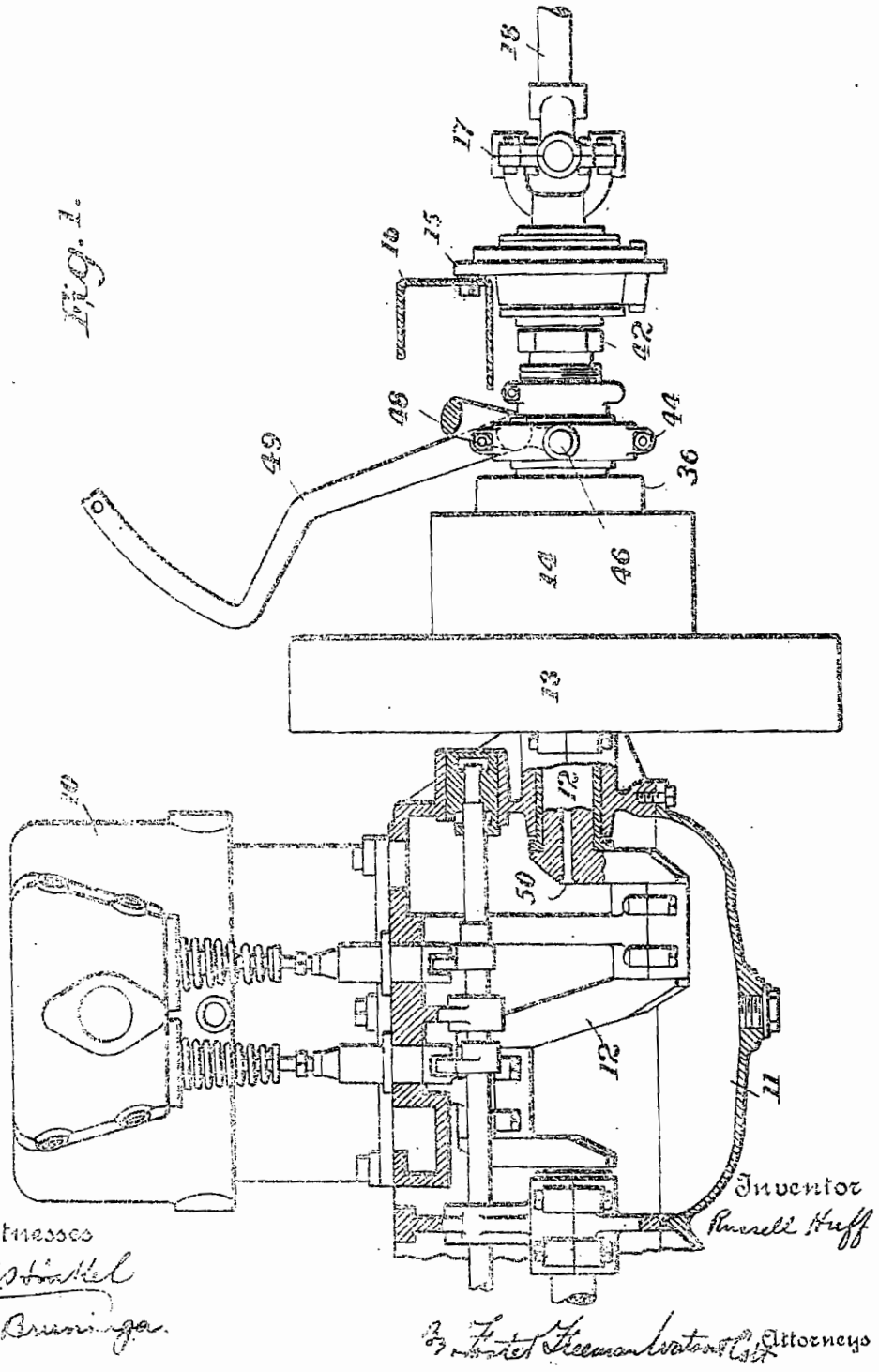

R. HUFF.

CLUTCH MECHANISM.

APPLICATION FILED APR. 18, 1910.

1,122,119. Patented Dec. 22, 1914.

2 SHEETS—SHEET 2.

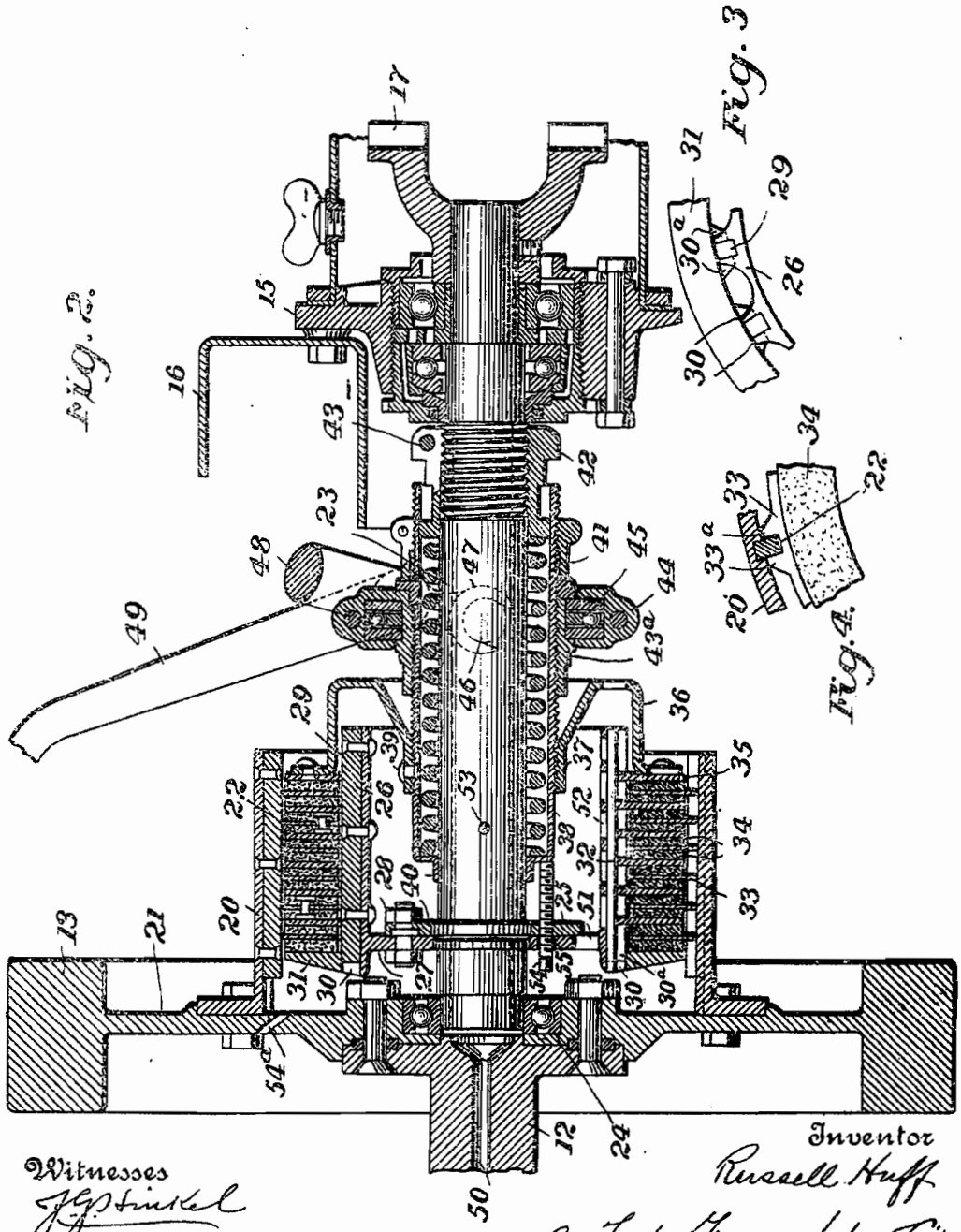

Witnesses

J. G. Hinkel

J. H. Bruninga.

Inventor

Russell Huff

By Foster Freeman Watson & Coit

Attorneys

UNITED STATES PATENT OFFICE.

RUSSELL HUFF, OF DETROIT, MICHIGAN, ASSIGNOR TO PACKARD MOTOR CAR COMPANY, OF DETROIT, MICHIGAN, A CORPORATION OF MICHIGAN.

CLUTCH MECHANISM.

1,122,119. Specification of Letters Patent. Patented Dec. 22, 1914.

Application filed April 18, 1910. Serial No. 556,251.

To all whom it may concern:

Be it known that I, RUSSELL HUFF, a citizen of the United States, and resident of Detroit, county of Wayne, State of Michigan, have invented certain new and useful Improvements in Clutch Mechanisms, of which the following is a specification.

This invention relates to clutch mechanisms, and particularly to clutch mechanisms which are arranged to be used in connection with motor vehicles.

One of the objects of this invention is to provide a clutch mechanism which may be easily assembled and disassembled.

Another object is to construct a clutch mechanism which will be light in weight and possess the required strength.

Another object is to provide a clutch mechanism which may be readily lubricated.

Further objects will appear from the detailed description.

The invention will be described in connection with the accompanying drawings, in which—

Figure 1 is an elevation partly in section of a hydrocarbon engine and its fly wheel, a propeller shaft, and a clutch mechanism connecting the hydrocarbon engine to the propeller shaft; Fig. 2 is a longitudinal section of the clutch mechanism; and Figs. 3 and 4 are detail views.

Referring to the drawings, 10 designates the motor which may be of the hydrocarbon type, provided with a crank case 11, and 12 designates the crank shaft. The cranks dip into an oil well formed in the crank case, so that the motor will be lubricated by the splash system. A fly wheel 13 is mounted upon the crank shaft and has connected to it a clutch mechanism 14. The clutch shaft is supported in a bracket 15, which is bolted to a cross member 16 of a motor vehicle, and a universal joint 17 is arranged to connect the clutch shaft with a propeller shaft 18. A cylindrical member 20 is bolted to the web 21 of the fly wheel and has riveted to its inside walls a series of longitudinally extending keys 22. The clutch shaft 23 is journaled at one end in the bracket 15 by means of suitable ball bearings, and at its other end in a roller bearing cage 24 which is mounted in the fly wheel which forms an extension of the crank shaft.

A spider 26 cylindrical in form, has integral with it a web 27, which is arranged to be bolted to a flange 25 integral with the clutch shaft, by means of a circle of bolts 28. This spider has riveted to it, a series of longitudinally extending keys 29 similar to the keys 22, and has formed integral with it a series of lugs 30. An end ring or plate 31 is arranged to be mounted upon the spider 26, and is provided with lugs 30^a which engage the lugs 30, as shown in Fig. 3. A series of clutch elements comprising steel plates 32 are mounted upon the spider and provided with key ways or lugs similar to the lugs 30^a which engage the keys 29. A second series of clutch elements comprising plates 33, Fig. 4, are provided with key ways or lugs 33^a engaging the keys 22 upon the cylindrical member 20. These plates are faced with material 34 like asbestos, the asbestos being riveted to the plates as shown in Fig. 2.

The end plate 35 has secured to it a cylindrical clamping member 36 which is provided with an inwardly extending portion 37, having a screw threaded engagement with a sleeve 38 so as to permit adjustment. If the proper adjustment has been made, the parts are firmly secured together by a suitable fastener 39. The sleeve 38 is provided with a reduced portion 40, which engages the clutch shaft and the annular portion at the end of the sleeve, forms an abutment for a spring 41. A second abutment 42 is mounted on the clutch shaft and has a threaded engagement therewith, so as to be adjustable longitudinally thereon, for the purpose of adjusting the tension of the spring 41. The abutment 42 is arranged to be locked in position by a bolt 43.

Suitable means are provided for shifting the sleeve 38 longitudinally of the clutch shaft. For this purpose, a support 43^a is adjustably mounted on the sleeve and is arranged to be locked in adjusted position. A shifter ring 44 is connected to the support by means of an antifriction bearing 45, and is provided with trunnions 46, which are engaged by forks 47 of a shifter member 48, which is pivoted on the cross member 16. The shifter member 48 is arranged to be actuated by a suitable lever 49 which may be engaged by the operator's foot.

The operation of the clutch so far described, will be obvious. Normally the spring 41 throws the clutch elements into frictional engagement, so that the driving

shaft will be clutched with the clutch shaft. By operating the lever 49, the sleeve 38 with its attached member 36 is moved rearwardly so as to disengage the clutch elements. The clutch, described, is, what is known as the dry disk clutch as distinguished from a clutch, the elements of which run in oil. It is, however, desirable to lubricate the clutch elements, and more especially the bearing surfaces between the keys and the clutch disks. The crank shaft 12 is provided with a channel 50 which communicates with the interior of the crank case. During the operation of the engine, the oil in the crank case will be churned up and some of it will enter the passage 50. This oil will flow toward the clutch shaft and will pass through the roller bearing cage 24, and lubricate the same. The oil passing the roller bearing will be discharged into the clutch casing and some of it will be thrown out by centrifugal force on the keys 22, so as to lubricate the same. The web 27 and the cylindrical part of the spider between the keys are provided with numerous holes 51, 52 respectively, so that some of the oil will find its way into the interior of the spider and passing through holes 52 will lubricate the keys 29. The surplus oil from the clutch casing will be discharged through apertures 54' formed in the fly wheel web. The clutch shaft is bored practically throughout its length as shown and is provided with holes 53, so that the bearing between the clutch shaft, the spring, and the extension 40 will be thoroughly lubricated. It will be understood that the amount of oil required and supplied through the channel 50 is relatively small being only that required to lubricate the sliding parts of the clutch.

By means of the above construction, the clutch can be readily disassembled by disconnecting the clutch shaft from the propeller shaft, unbolting the clutch bracket from the cross bar 16, and disconnecting the ring 44 from the shifter 48; the clutch shaft and the parts mounted thereon can then be removed as a unit from the cylindrical member 20 by an axial movement. The cylinder member 20 can also be easily disconnected from the fly wheel web by loosening the bolts.

In order to disassemble the clutch elements, the following means are provided: Two or more threaded screws 54 have a threaded engagement with the flange 25, and are arranged to bear against the end of the sleeve 38. After the clutch shaft and its attached parts are withdrawn from the cylindrical member 20, screws 54 can be adjusted so as to move the sleeve axially of the shaft, and so compress spring 41 as to relieve the clutch elements of the tension of the spring. The screws pass through enlarged holes 55 in the web 21, which permit the heads to pass therethrough. After the clutch elements have been relieved of the tension of the spring, the spider 26 can be unbolted from the flange 25 and removed with the clutch elements from the clutch shaft, thereby permitting the removal and replacement of clutch elements.

It is obvious that various changes may be made in the details of construction without departing from this invention, and it is, therefore to be understood that this invention is not to be limited to the specific construction shown and described.

Having thus described the invention, what is claimed is:

1. The combination with a motor having a crank shaft and a crank case, of a driven shaft, and a clutch connecting said shafts, said crank shaft being provided with a channel extending from said crank case to said clutch to lubricate the latter.

2. The combination with a motor having a crank shaft and a crank case, of a driven shaft, a clutch connecting said shafts, and a casing for said clutch, said crank shaft being provided with a channel leading from said crank case to said clutch casing to supply lubricant to said clutch.

3. The combination with a motor having a crank shaft and a crank case, of a driven shaft, a bearing between said shafts, and a clutch connecting said shafts, said crank shaft being provided with a channel extending from said crank case to said bearing so as to lubricate the same.

4. The combination with a motor having a crank shaft and a crank case, and a roller bearing on said crank shaft, of a driven shaft journaled in said bearing, and a clutch connecting said shafts, said crank shaft being provided with a channel extending from said crank case to said bearing to lubricate the same.

5. The combination with a motor having a crank shaft and a crank case, of a driven shaft, a bearing between said shafts, a clutch connecting said shafts, said crank shaft being provided with a channel extending from said crank case to said bearing so as to lubricate the same, and means permitting the lubricant from said channel to lubricate the clutch.

6. The combination with a motor having a crank shaft and a crank case, of a driven shaft, a clutch connecting said shafts, a casing for said clutch including a movable part, and means for supplying lubricant from said crank case to said clutch casing, the lubricant being thrown in engagement with the clutch parts by centrifugal force.

7. The combination with a motor having a crank shaft and a crank case, of a driven shaft, a clutch connecting said shafts, said clutch including movable friction disks and

keys therefor, a casing for said clutch including a movable part, and means for supplying lubricant from said crank case to said clutch casing, the lubricant being thrown in engagement with said disks and keys by centrifugal force.

8. The combination with a motor having a crank shaft and a crank case, of a clutch casing mounted on the end of the crank shaft, a clutch within said casing having keys and relatively sliding clutch plates, and means for conveying lubricant by the splash system from said crank case to said keys for lubricating the latter.

9. The combination with a motor having a crank shaft and a crank case, of a driven shaft, a clutch connecting said shafts, and a spring on said driven shaft for actuating said clutch, said shafts being provided with channels for supplying said spring with lubricant from said crank case.

10. In a clutch, the combination with driving and driven shafts, of clutch disks connecting said shafts, a sleeve on said driven shaft, an end plate mounted on said sleeve, and a spring on said driven shaft and surrounded by said sleeve.

11. In a clutch, the combination with driving and driven shafts, of clutch disks connecting said shafts, a sleeve on said driven shaft, an end plate mounted on said sleeve, a spring on said driven shaft, and an adjustable sleeve on said shaft telescoping with said first sleeve.

12. In a clutch, the combination with driving and driven shafts, of clutch members on said shafts, a spring for throwing said members into engagement, means for throwing said clutch members out of engagement, and means for compressing said spring and relieving the clutch members of the tension of said spring.

13. In a clutch, the combination with driving and driven shafts, of clutch members on said shafts, a spring for throwing said members into engagement, means for throwing said clutch members out of engagement, an abutment for said spring, and means engaging said abutment so as to relieve the clutch members of the tension of said spring.

14. In a clutch, the combination with driving and driven shafts, of clutch members on said shafts, a spring for throwing said members into engagement, means for throwing said clutch members out of engagement, and adjusting means on said driven shaft constructed to compress said spring and relieve the clutch members of the tension of the spring.

15. In a clutch, the combination with driving and driven shafts, of clutch members on said shafts including clutch disks, end members for said clutch disks, a spring for moving said end members together so as to engage the clutch, means for separating said end members so as to disengage the clutch, and means for relieving the clutch members of the tension of said spring without relieving the tension in the spring.

16. In a clutch, the combination with driving and driven shafts, of clutch members on said shafts including clutch disks, end members for said clutch disks, a spring for moving said end members together so as to engage the cluth, means for separating said end members so as to disengage the clutch, and adjusting means on said driven shaft for relieving the clutch members of the tension of said spring without relieving the tension in the spring.

17. In a clutch, the combination with driving and driven shafts, of clutch members on said shafts including clutch disks, end members for said clutch disks, a spring for moving said end members together so as to engage the clutch, means for separating said end members so as to disengage the clutch, means for relieving the clutch members of the tension of said spring without relieving the tension in the spring, and means whereby one of said end members may be removed.

18. In a clutch, the combination with a clutch shaft having a clutch spider removably secured thereto, of an end plate arranged on said spider and secured against forward endwise movement, a clutch casing surrounding the spider, clutch plates keyed alternately to the spider and the casing, a clamping member for pressing the plates into frictional engagement, a spring for operating the clamping member, a lever for compressing the spring to open the clutch, and means comprising a threaded element for compressing and holding the clutch spring whereby the spider may be disconnected from the clutch shaft for the purpose of removing the clutch plates.

19. The combination with a motor crank shaft and a clutch casing secured thereto, of a clutch shaft arranged in line with the motor shaft and having a bearing in the end thereof, a clutch spider secured to the clutch shaft, clutch plates arranged alternately on the clutch casing and spider, and arranged to coöperate frictionally, a clamping member engaging the outside spider plate, a sleeve secured to said clamping member and surrounding the clutch shaft and having a shoulder at one end thereof, an adjustable abutment on said clutch shaft, a spring arranged between said shoulder and said abutment and within said sleeve and adapted to close the clutch, and means for relieving the clutch of the tension of the spring.

20. The combination with driving and driven shafts, of a clutch connecting said shafts, a propeller shaft, a detachable connection between said driven and propeller

shafts, means detachably securing said clutch to said driving shaft, and a detachable support for said driven shaft, whereby said clutch and driven shaft may be removed as a unit.

21. The combination with driving and driven shafts, of a clutch connecting said shafts, a propeller shaft, a detachable connection between said driven and propeller shafts, said clutch including clutch members secured to said driving and driven shafts respectively, clutch elements between said members, said clutch elements having detachable connections with the clutch member on the driving shaft, and a detachable support for said driven shaft, whereby said driven shaft and said clutch elements may be removed as a unit.

22. The combination with driving and driven shafts, of a clutch connecting said shafts, a propeller shaft, a detachable connection between said driven and propeller shafts, said clutch including a cylindrical member secured to said driving shaft, a spider secured to said driven shaft, and clutch elements on said spider and detachably connected to said cylindrical member, and a detachable support for said driven shaft, whereby said driven shaft, spider, and clutch elements may be removed as a unit.

23. The combination with driving and driven shafts, of a clutch connecting said shafts, a propeller shaft, a detachable connection between said driven and propeller shafts, means detachably securing said clutch to said driving member, a detachable support for said driven shaft, whereby said clutch and driving shaft may be removed as a unit, said clutch including clutch elements and a spring for clutching said elements, and means for relieving the tension of said spring to permit disassembling of said elements.

24. The combination with a motor having a crank shaft, of a driven shaft, and a clutch connecting said shafts, said crank shaft being provided with a channel adapted to supply lubricant to the clutch.

25. The combination with a motor having a crank shaft, of a driven shaft, a bearing between said shafts, and a clutch connecting said shafts, said crank shaft being provided with a channel adapted to supply lubricant to said bearing.

In testimony whereof I affix my signature in presence of two witnesses.

RUSSELL HUFF.

Witnesses:
E. H. King,
P. J. Kilcline.

DESIGN.

S. D. WALDON.

VEHICLE BODY.

APPLICATION FILED APR. 25, 1910.

41,598. Patented July 18, 1911.

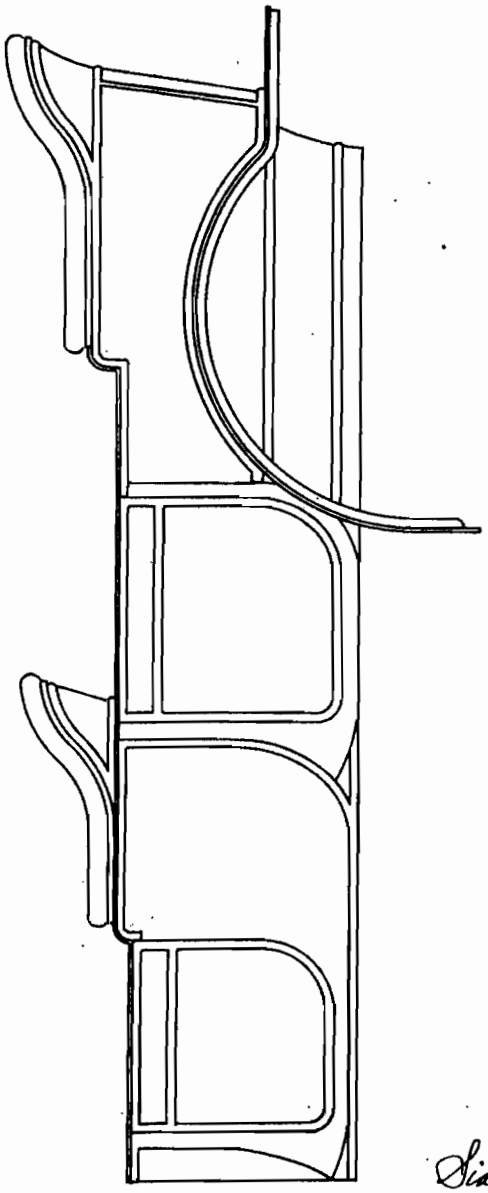

Witnesses
J. G. Stinkel
Cyril Brown.

Inventor
Sidney D. Waldon
by Foster Freeman Watson & Coit
Attorneys

COLUMBIA PLANOGRAPH CO., WASHINGTON, D. C.

UNITED STATES PATENT OFFICE.

SIDNEY D. WALDON, OF DETROIT, MICHIGAN.

DESIGN FOR A VEHICLE-BODY.

41,598. Specification for Design. Patented July 18, 1911.

Application filed April 25, 1910. Serial No. 557,614. Term of patent 7 years.

To all whom it may concern:

Be it known that I, SIDNEY D. WALDON, a citizen of the United States, residing at Detroit, in the county of Wayne and State of Michigan, have invented a new, original, and ornamental Design for a Vehicle-Body, of which the following is a specification, reference being had to the accompanying drawing, forming a part thereof.

The figure is a side elevation of a vehicle body showing my new design.

I claim—

The ornamental design for a vehicle body as shown.

SIDNEY D. WALDON.

Witnesses:

G. S. LOOMIS,

EDITH F. ALEXANDER.

Copies of this patent may be obtained for five cents each, by addressing the "Commissioner of Patents, Washington, D. C."

A. LOOMIS.

PUMP FOR MOTOR VEHICLES.

APPLICATION FILED MAY 6, 1910.

1,089,419.

Patented Mar. 10, 1914.

4 SHEETS—SHEET 1.

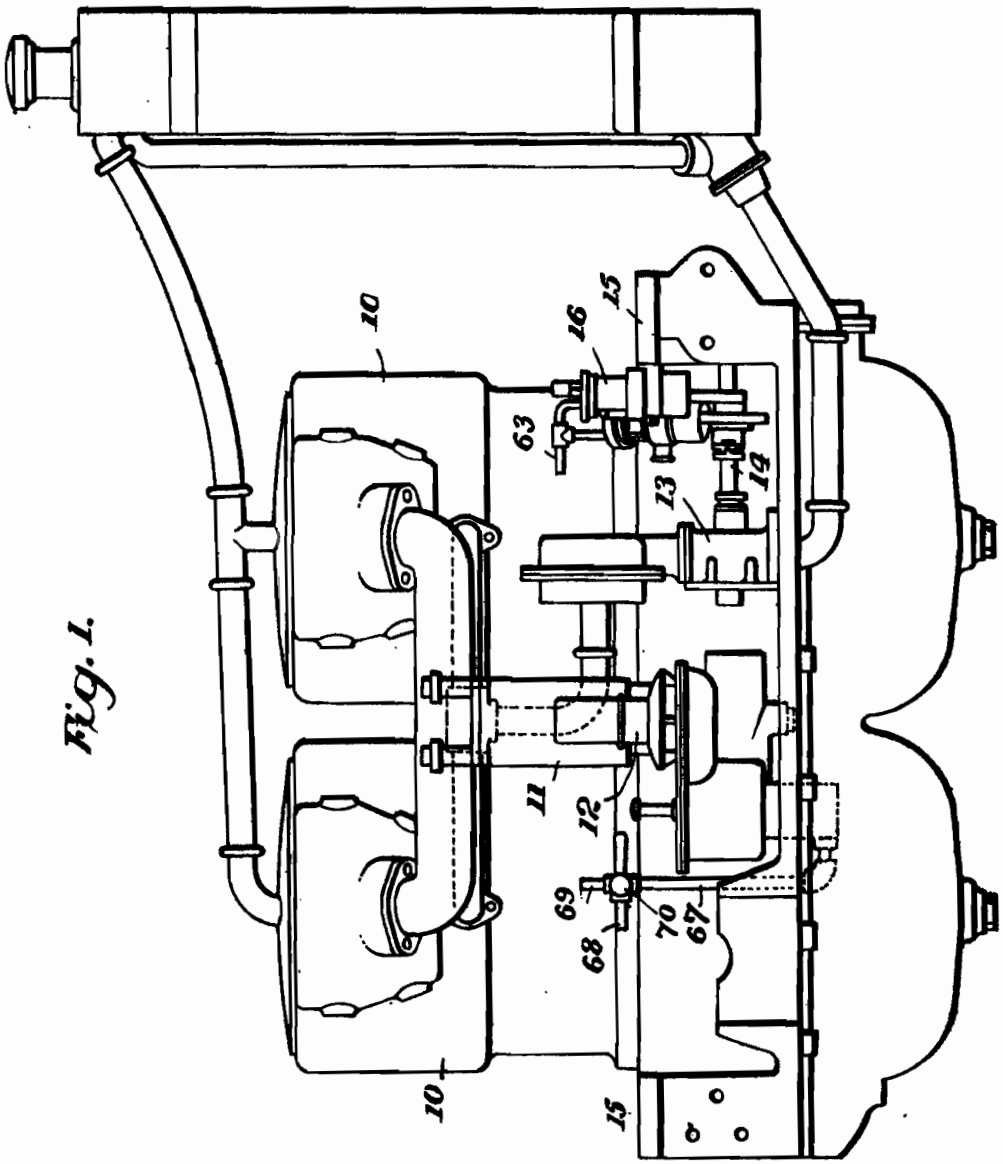

Fig. 1.

Witnesses

J. G. Hinkel

J. H. Bruninga

Inventor

Allen Loomis

By Foster Freeman Watson & Coit

Attorneys

A. LOOMIS.

PUMP FOR MOTOR VEHICLES.

APPLICATION FILED MAY 6, 1910.

1,089,419.

Patented Mar. 10, 1914.

4 SHEETS—SHEET 2.

Fig. 2

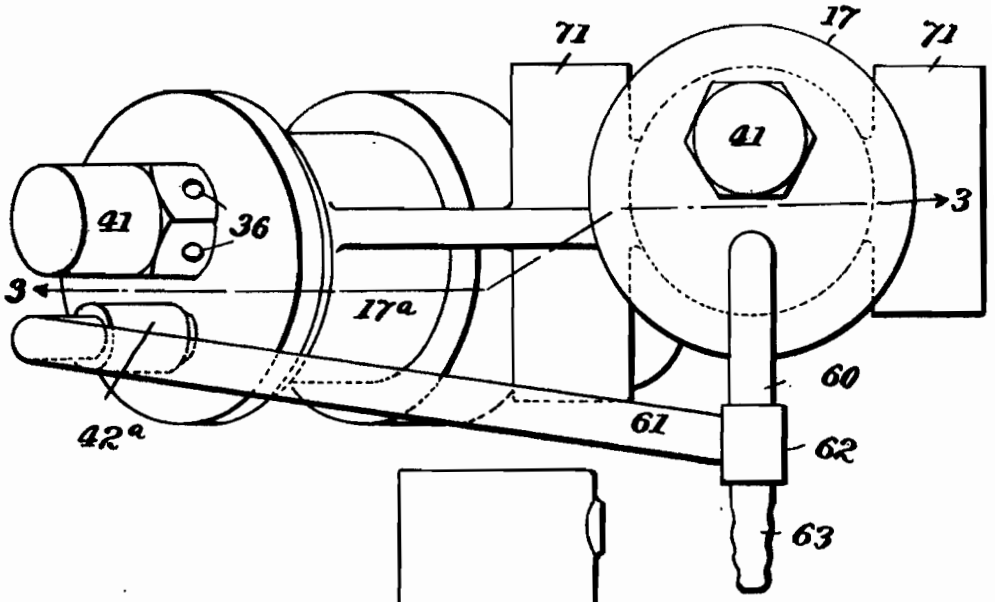

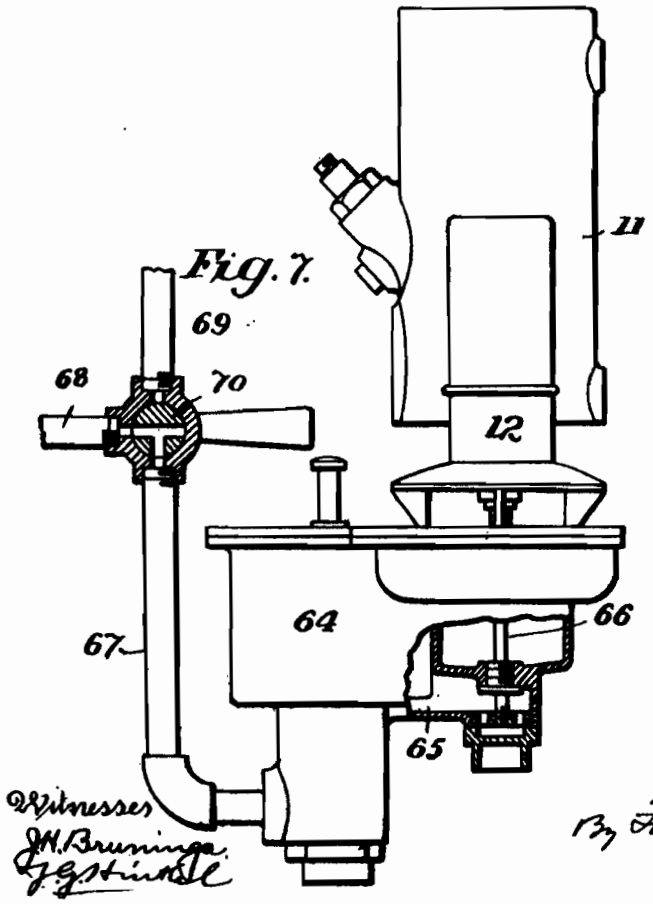

Fig. 7.

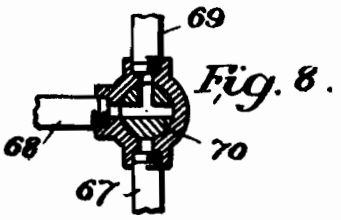

Fig. 8.

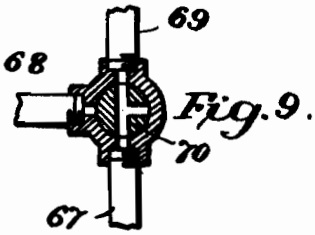

Fig. 9.

Witnesses
J. H. Bruninga
J. G. Hinkle

Inventor
Allen Loomis
By Foster Freeman Watson & Coit

A. LOOMIS.

PUMP FOR MOTOR VEHICLES.

APPLICATION FILED MAY 6, 1910.

1,089,419.

Patented Mar. 10, 1914.

4 SHEETS—SHEET 3.

Fig. 3.

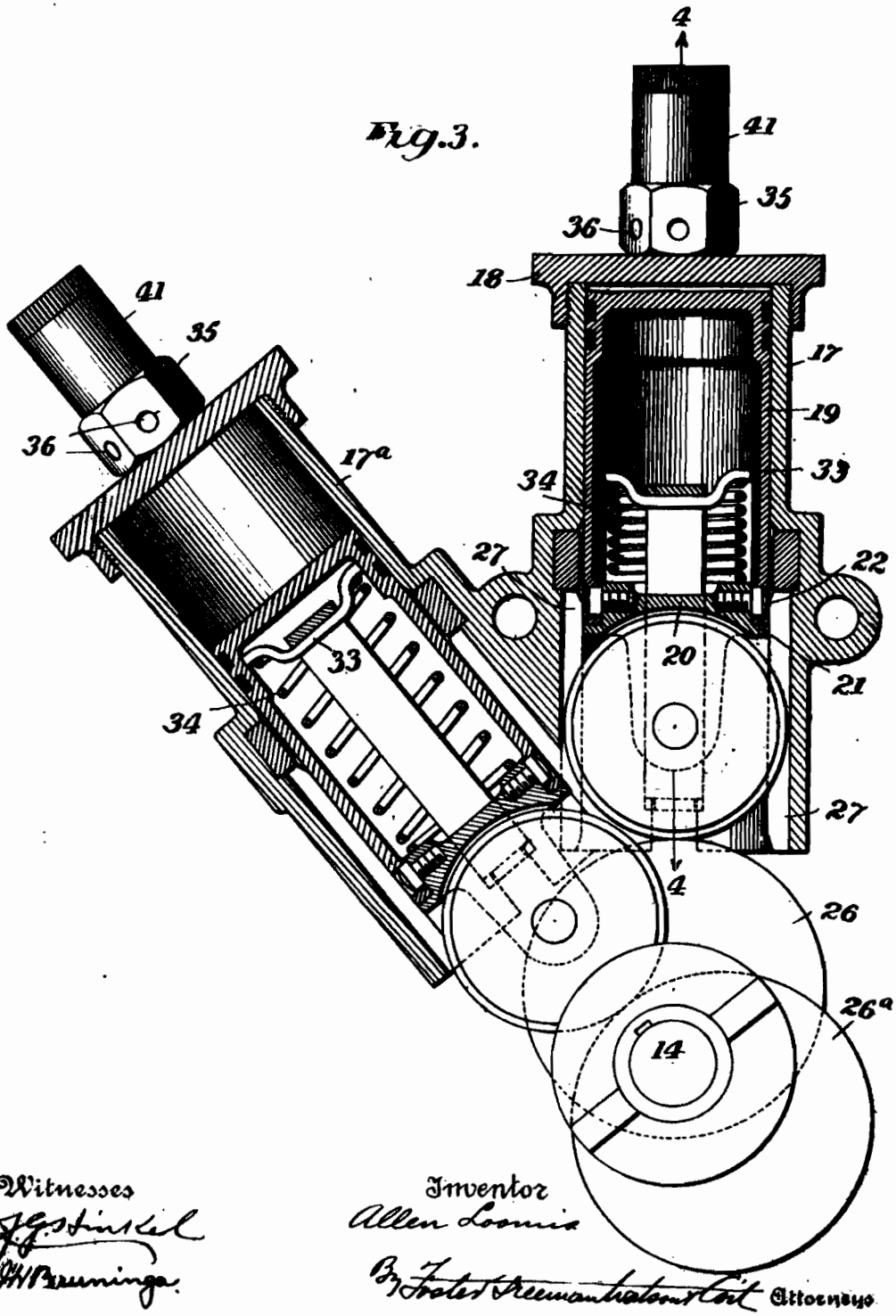

Witnesses

J. G. Stinkel

J. H. Brunings

Inventor

Allen Loomis

By Foster Freeman Watson & Coit Attorneys

A. LOOMIS.

PUMP FOR MOTOR VEHICLES.

APPLICATION FILED MAY 6, 1910.

1,089,419.

Patented Mar. 10, 1914.

4 SHEETS—SHEET 4.

Fig. 4

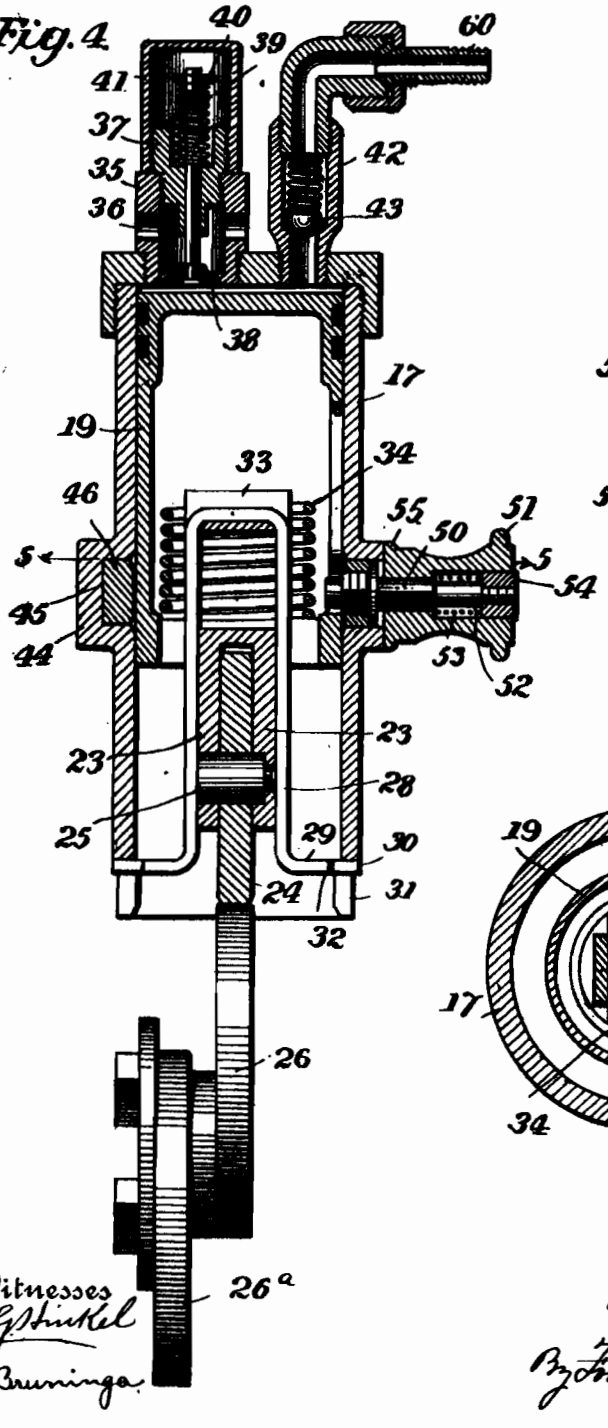

Fig. 6.

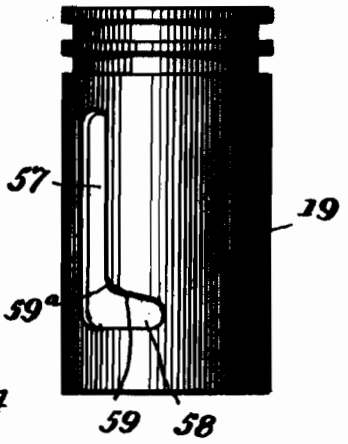

Fig. 5

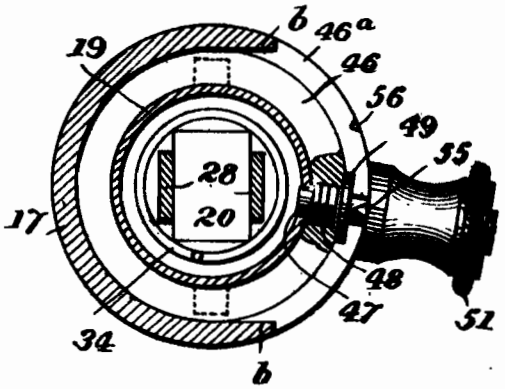

Witnesses
J. G. Stinkel
J. H. Brunings

Inventor
Allen Loomis
By Foster Freeman Watson & Coit
Attorneys

UNITED STATES PATENT OFFICE.

ALLEN LOOMIS, OF DETROIT, MICHIGAN, ASSIGNOR TO PACKARD MOTOR CAR COMPANY, OF DETROIT, MICHIGAN, A CORPORATION OF MICHIGAN.

PUMP FOR MOTOR-VEHICLES.

1,089,419. Specification of Letters Patent. Patented Mar. 10, 1914.

Application filed May 6, 1910. Serial No. 559,753.

To all whom it may concern:

Be it known that I, ALLEN LOOMIS, a citizen of the United States, and resident of Detroit, Wayne county, State of Michigan, have invented certain new and useful Improvements in Pumps for Motor-Vehicles, of which the following is a specification.

This invention relates to motor vehicles and particularly to a pump and a pump system therefor.

One of the objects is to provide a pump which is simple in construction, effective in operation and which can be easily assembled and disassembled.

Another object is to provide a pump and a driving mechanism therefor constructed so that the pump can be easily thrown into and out of operation.

Another object is to group this pump together with the other elements of the motor vehicle power plant in a novel manner.

Another object is to provide an arrangement whereby the carbureter can be cleaned and blown out.

Further objects will appear from the detail description.

The invention will be described in connection with the accompanying drawings, in which,

Figure 1 is an elevation of a motor vehicle power plant showing the invention applied thereto. Fig. 2 is a plan view of the pump, certain parts being omitted. Fig. 3 is a section on the line 3—3, Fig. 2. Fig. 4 is a section on the line 4—4, Fig. 3. Fig. 5 is a section on the line 5—5, Fig. 4. Fig. 6 is a detail view of the piston, and Fig. 7 is an elevation of the mixture pipe and carbureter, parts being shown in section to show certain features of this invention. Figs. 8 and 9 show different positions of the three way valve.

The power plant consists generally of a plurality of engine cylinders 10, 10. In this case the number of cylinders is four and they are cast in pairs. A mixture pipe 11 and a carbureter 12 supply combustible mixture to the engine and a water pump 13 driven from a shaft 14 supplies water to the jackets. The power plant is supported from the side bars by means of the usual cross members 15.

A pump generally designated by the reference character 16 in Fig. 1 is bolted to the cross member 15 and is arranged to be driven by eccentric on the pump shaft 14. It is to be understood however that this pump may be driven in any other suitable manner from that shown. The pump comprises a plurality of cylinders 17, 17ª which form a single casting. Since both cylinders are practically identical in construction only one will be described in detail. The cylinder 17 has screwed thereon a head 18 and in this cylinder works a hollow piston 19, the lower end of which is open. A cam roll support 20 is secured in the open end of the piston by means of screws 22, the support being provided with stop shoulders 21. A cam roll 24 is mounted upon a pivot pin 25 between ears 23 which are integral with the support 20. This cam roll is arranged to bear upon and be actuated by a cam 26 upon the pump shaft 14. The cylinder walls are provided with grooves 27 forming ways for the cam roll 24 so that the cam roll forms in effect a cross head for the piston.

A U-shaped member 28 extends into the piston and is provided with arms 29 having reduced portions 30, which engage slots 31 in the cylinder walls. The U-shaped member is preferably resilient and so constructed that the side members thereof will be moved outwardly due to the inherent elasticity thereof so that when this member is in position, as shown in Fig. 4, the shoulders 32 will bear against the cylinder walls. This insures that the member will be properly retained in place. The upper end of the U-shaped member forms an abutment which receives a cross piece 33, and this cross piece and the end of the U-shaped member form together an abutment for a spring 34. The support 20 forms the other or lower abutment, as shown in Fig. 3.

The cylinder head has screwed into it a valve casing 35 provided with holes 36 and into this casing is screwed a guide 37 arranged to receive and guide the stem of the inlet valve 38. This inlet valve is closed by a spring 39 and the tension of this spring can be adjusted by the adjustable nut 40. A removable knurled cap 41 is provided to cover and protect the spring. The head has also screwed into it an outlet valve casing 42 which is provided with the outlet valve 43.

The cylinder has formed thereon a boss

44 which has cut therein an annular groove 45 which is arranged to receive a ring or collar 46. A locking pin 47 is provided with a threaded portion 48 so that it can be rigidly secured to the ring, as shown in Figs. 4 and 5, and a collar 49 is provided so as to form a stop. This locking pin has also formed thereon a squared portion 50 which is arranged to receive a handle 51. The boss 44 has formed therein a circumferential groove 46ᵃ in which the pin works. By means of this construction the handle 51 may be moved transversely so as to rotate the ring and the pin around the piston as an axis. In order that this handle may be latched in position the pin is provided with a reduced portion 52 arranged to receive a spring 53 bearing against the handle and an abutment 54 and the handle has mounted thereon latching members 55 which engage a pair of keeper recesses 56 so that this handle may be locked in different angular positions. The piston has formed therein a longitudinal groove 57 and a cross groove 58. The upper portion of the cross groove 58 is inclined, as shown at 59 in Fig. 6, for a purpose hereinafter to be described.

The valve casing for the cylinder 17 is connected to a pipe 60 which connects with a T 62 and the valve casing 42ᵃ of the cylinder 17ᵃ is connected to the T 62, by means of a pipe 61. The T 62 has also secured to it a nipple 63 which is arranged to receive a flexible tube. The pump is provided with lugs 71 so that it may be bolted to the cross member 15 by bolts passing through holes in the lugs.

The cams for operating the pistons are angularly displaced on the shaft, as shown in Fig. 3, so that when one piston is up the other is down. This provides a construction whereby the pistons may be actuated successively so as to deliver air at a practically constant pressure. In order that the cylinders may thus be actuated successively and so that they may be placed side by side and close together, it is necessary that they be slightly offset, as shown in Fig. 2. The cams must also be offset, as shown in Fig. 4, in order to coöperate with the cam rolls. The pistons are guided in their movements by means of the cam rolls and also by the sides of the U-shaped members engaging the ears 23, but the depth of the piston is great enough to prevent any binding.

In order to throw the pistons out of operation, the handle 51 is moved in a counterclockwise direction from the position shown in Fig. 5, so that the latching lug 55 will engage the upper recess 56. Assuming that the pump is in operation, this movement will cause the locking pin 47 to enter the cross groove 58. The cross groove 58 is preferably so arranged that the point 59ᵃ will reach the locking pin 47 when the piston is in the highest position on the cam. If, therefore, the handle is moved, as described, the locking pin 47 will positively raise the piston so that the cam roll 24 will be moved from engagement with the cam 26 and thus wear will be prevented.

In order that the ring 46 may be readily replaced, the walls of the groove 45 are cut away, as shown at *b*, *b*, Fig. 5, so that when the piston is removed from the cylinder and the ring, this ring can be removed from its groove by an outward movement. In order that the piston may be removed, it is necessary that the pin 47 be moved out of engagement with the cam grooves therein. It will be noted that the section 50 is square so that by pulling the handle outwardly this pin may be unscrewed by turning the handle. It will be noted that all of the parts are so arranged that the entire pump may be easily assembled or disassembled.

It sometimes happens that the carbureter will be clogged up by dirt or other foreign matter and this invention therefore provides an arrangement whereby the carbureter may be cleaned or blown out. In Figs. 1 and 7 a carbureter and mixture pipe are shown. This carbureter may be of any suitable and well known construction, and is provided with a float chamber 64, fuel passage 65 and a fuel nozzle 66. A fuel supply pipe 67, 68, is provided with a three-way valve 70 and a branch 69, the branch 68 leading to the fuel supply tank and the branch 69 forming a nipple for connection to the flexible tube.

In Fig. 7, the valve 70 is shown in normal position in which the float chamber is connected with the fuel supply tank. The nipple 69 may be connected to any suitable compressed air supply, as for instance, the pump 16 connection being made by a flexible tube connecting the nipples 69 and 63. By moving the valve 70 to the position shown in Fig. 8, the compressed air supply is connected with branch 68 so that the branch pipe 68 and the fuel tank may be blown out. It will be understood that while this is taking place, the engine will run on the fuel in the float chamber. By moving the valve 70 to the position shown in Fig. 9, the compressed air supply is connected with the carbureter so that the carbureter is blown out. It will be understood that the valve is moved to the position just prior to the stopping of the motor. By means of this arrangement, the fuel connections and the fuel supply tank and the carbureter can be blown out and cleaned of any dirt which may accumulate. The carbureter and pump are preferably located on the same side of the engine so that the connections may be readily made.

The pump 16 may be used for various

purposes. One of its useful purposes has been described. A flexible tube may be connected to the nipple 63 so that the air compressed by the pump may be used to inflate the tires, clean the seat cushions, or the vehicle generally, or to supply a reservoir or the like with compressed air. The arrangement of the cylinders and the pistons is such that the air is supplied at substantially a uniform pressure throughout the operation of the pump.

It is obvious that various changes may be made in the details of construction without departing from this invention, and it is therefore to be understood that this invention is not to be limited to the specific construction shown and described.

Having thus described the invention, what is claimed is.

1. In a pump, the combination with a cylinder, of a piston working therein, a cam, said cylinder being provided with ways, and a cam roll on said piston and working in said ways.

2. In a pump, the combination with a cylinder, of a hollow piston working therein, a cam roll support removably connected to said piston, said cylinder walls being provided with ways, and a cam roll mounted in said support and working in said ways.

3. In a pump, the combination with a cylinder, of a hollow piston working therein and having a solid face and an open end, a spring for moving said piston in one direction, and an abutment for said spring inside of said piston and extending through the open end thereof.

4. In a pump, the combination with a cylinder, of a hollow piston working therein and having a solid face and an open end, a spring for moving said piston away from the head end of the cylinder, and an abutment for said spring inside of said piston and extending through the open end thereof.

5. In a pump, the combination with a cylinder, of a piston working therein, a spring for moving said piston away from the head end of the cylinder and held at points beyond the travel of the piston, an abutment for said spring extending toward the head end of the cylinder, and an abutment on said piston.

6. In a pump, the combination with a cylinder, of a piston working therein, a spring for moving said piston away from the head end of the cylinder, an abutment for said spring comprising a substantially U-shaped member extending toward the head end of the cylinder and held at points beyond the travel of the piston, and an abutment on said piston.

7. In a pump, the combination with a cylinder, of a piston working therein, a U-shaped abutment extending into said cylinder and provided with arms detachably engaging said cylinder, a removable abutment on said piston, and a spring between said abutments.

8. In a pump, the combination with a cylinder, of a piston working therein and having a slot in its side wall, means connected to said piston for operating the same, and means for rendering said piston inoperative including a rotary member projecting into said slot, and a stop on said member.

9. In a pump, the combination with a cylinder, of a piston working therein, the cylinder being provided with an annular channel, a ring in said channel, and means to move said ring, said cylinder being provided with a recess to permit removal of said ring.

10. In a pump, the combination with a cylinder, of a piston working therein, the cylinder being provided with an annular channel, a ring in said channel, and a removable stop on said ring engaging said piston.

11. In a pump, the combination with a cylinder, of a piston working therein and having an L-shaped slot in its side wall, and means on said cylinder projecting into said slot and normally engaging the longitudinal portion thereof and adapted to be moved into engagement with the transverse portion thereof.

In testimony whereof I affix my signature in presence of two witnesses.

ALLEN LOOMIS.

Witnesses:
DON T. HASTINGS,
O. E. HUNT.

Corrections in Letters Patent No. 1,089,419.

It is hereby certified that in Letters Patent No. 1,089,419, granted March 10, 1914, upon the application of Allen Loomis, of Detroit, Michigan, for an improvement in "Pumps for Motor-Vehicles," errors appear in the printed specification requiring correction as follows: Page 3, lines 48–49, strike out the words "and held at points beyond the travel of the piston,"; same page, lines 74–75, strike out the words "projecting into said slot,"; same page, line 51 as now numbered, after the word "cylinder" insert the words *and held at points beyond the travel of the piston,*; same page, lines 75–76 as now numbered, after the word "member" insert the words *projecting into said slot;* and that the said Letters Patent should be read with these corrections therein that the same may conform to the record of the case in the Patent Office.

Signed and sealed this 21st day of April, A. D., 1914.

[SEAL.] J. T. NEWTON,

Acting Commissioner of Patents.

R. HUFF.

TAIL LAMP FOR MOTOR VEHICLES.

APPLICATION FILED MAY 17, 1910.

1,053,995. Patented Feb. 25, 1913.

2 SHEETS—SHEET 1.

Fig. 1.

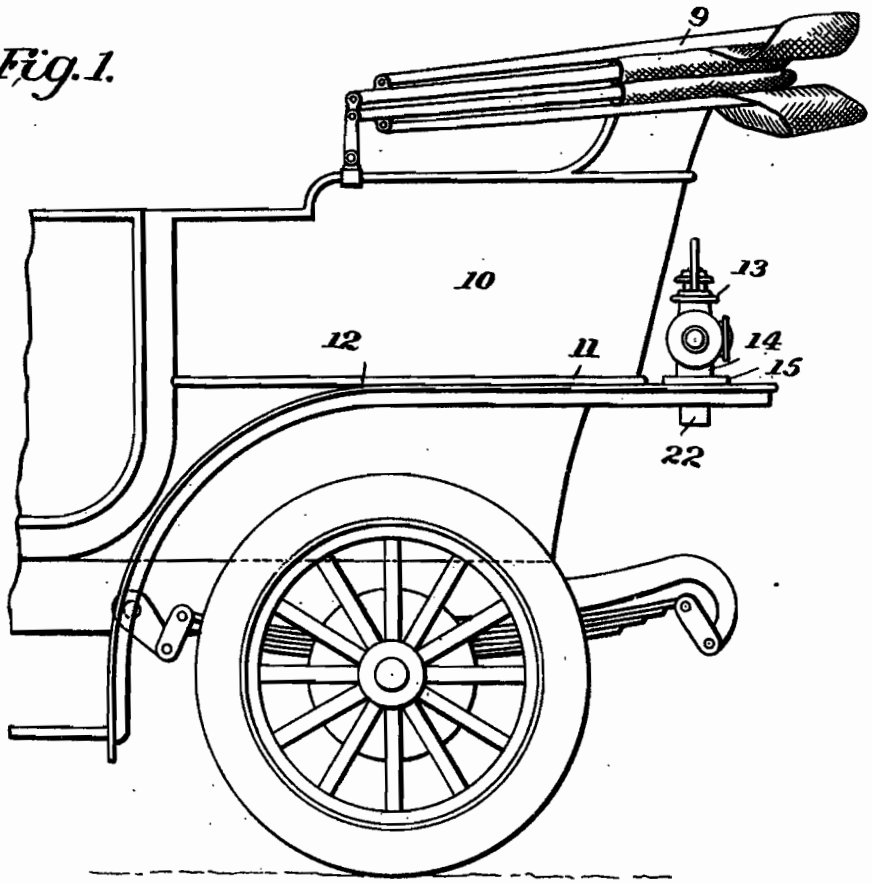

Fig. 2.

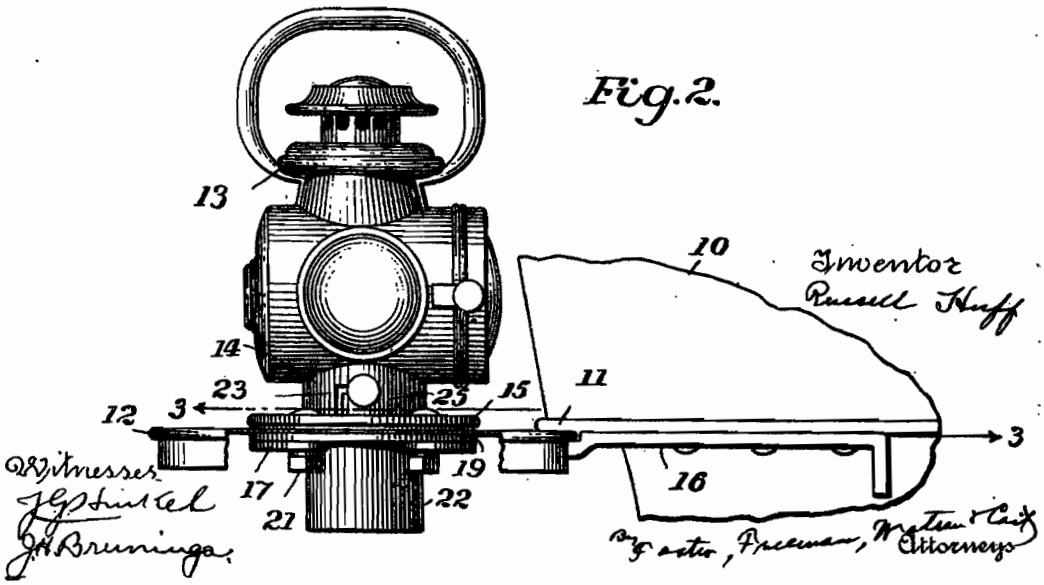

Inventor
Russell Huff

Witnesses
J. G. Hinkel
J. H. Bruninga

By Foster, Freeman, Watson & Coit
Attorneys

R. HUFF.

TAIL LAMP FOR MOTOR VEHICLES.

APPLICATION FILED MAY 17, 1910.

1,053,995. Patented Feb. 25, 1913.

2 SHEETS—SHEET 2.

Fig. 3.

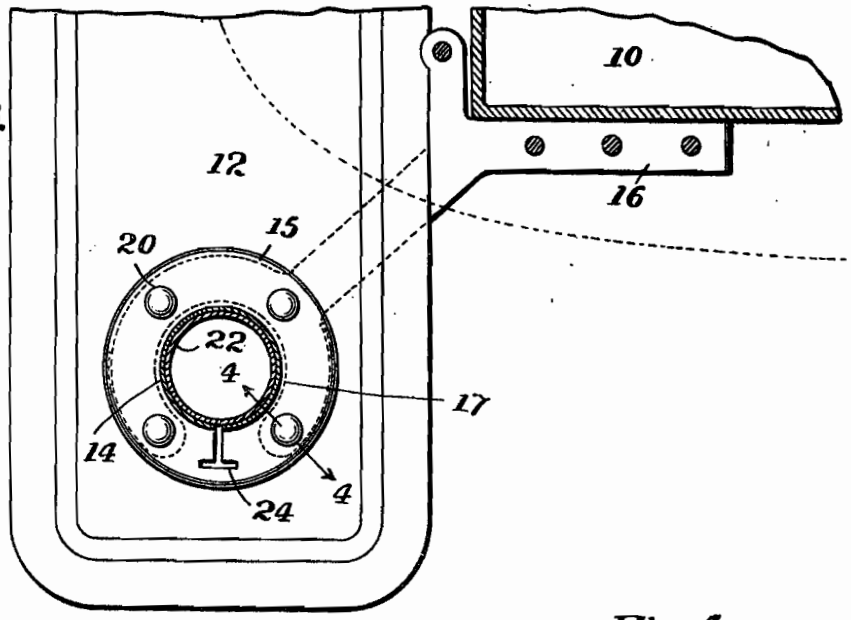

Fig. 4.

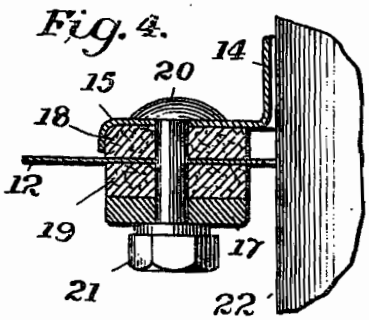

Fig. 5.

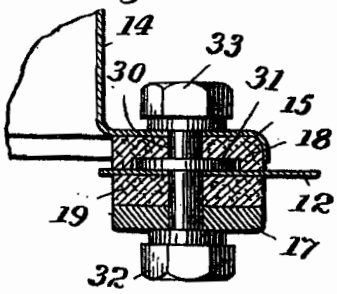

Fig. 6.

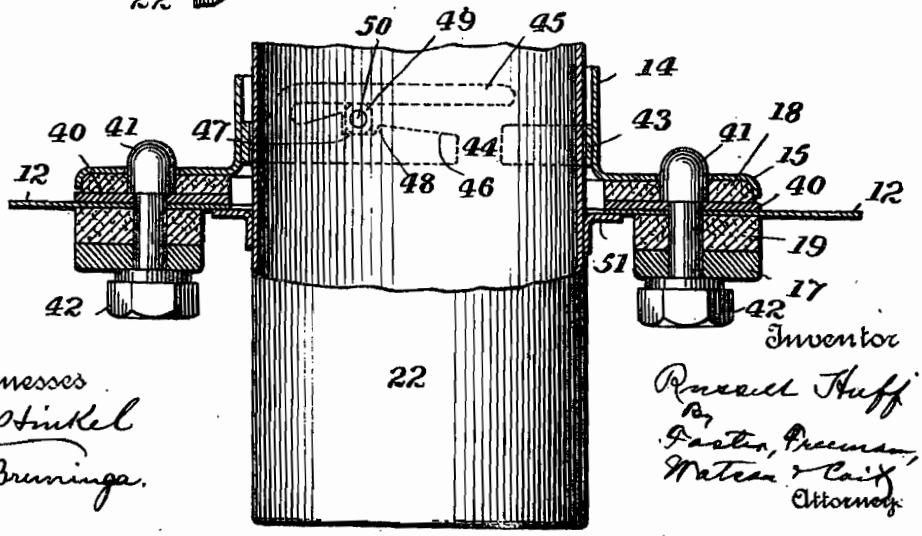

Witnesses
J. G. Pinkel
J. H. Bruninga.

Inventor
Russell Huff
By
Foster, Freeman, Watson & Coit
Attorneys

UNITED STATES PATENT OFFICE.

RUSSELL HUFF, OF DETROIT, MICHIGAN, ASSIGNOR TO PACKARD MOTOR CAR COMPANY, OF DETROIT, MICHIGAN, A CORPORATION OF MICHIGAN.

TAIL-LAMP FOR MOTOR-VEHICLES.

1,053,995. Specification of Letters Patent. Patented Feb. 25, 1913.

Application filed May 17, 1910. Serial No. 561,906.

To all whom it may concern:

Be it known that I, RUSSELL HUFF, a citizen of the United States, and resident of Detroit, county of Wayne, State of Michigan, have invented certain new and useful Improvements in Tail-Lamps for Motor-Vehicles, of which the following is a specification.

This invention relates to motor vehicles, and more particularly to the tail lamp and its means of attachment to the vehicle.

One of the objects of this invention is to attach the lamp in a convenient position on the vehicle and in such a manner that the vibration will be reduced to a minimum.

Another object is to provide a means of attachment whereby the lamp may be easily removed from and placed in operative position.

Further objects will appear from the detail description.

The invention will be described in connection with the accompanying drawings, in which—

Figure 1 is a partial side elevation of a motor vehicle showing the lamp attached thereto; Fig. 2 is the detail rear elevation; Fig. 3 is a section on the line 3—3, Fig. 2; Fig. 4 is a section on the line 4—4, Fig. 3; Fig. 5 is a similar section showing another method of attachment; Fig. 6 is a longitudinal section showing another form of this invention.

Referring to the drawings, and more particularly to Figs. 1 to 4 inclusive, 10 designates a motor vehicle body which is provided with an offset portion 11, a mud guard 12, and a top 9. A tail lamp 13 is mounted upon the mud guard and is provided with a body or casing 14 having a flange 15. A bracket 16 is secured to the vehicle body underneath the offset portion as shown in Figs. 1 to 3 inclusive, and is provided with a ring or fork shaped portion 17 which extends underneath the mud guard. A pair of packing rings 18 and 19 are positioned between the mud guard 12, and the flange 15 and the ring shaped portion 17, and suitable fastening bolts 20 extend through these portions and are provided with nuts 21 so as to securely clamp the flange, the mud guard, and the bracket together. The lamp is provided with a fuel reservoir 22 having the usual wick adjusting member 23, and the mud guard is provided with an aperture through which the reservoir extends. The mud guard, flange 15, and packing are also provided with a T-shaped recess 24 for the adjusting member and its shank. The lamp casing and reservoir are provided with a suitable coöperating lug and slot forming a bayonet joint so as to detachably secure the reservoir in position. Such a joint is shown in Fig. 6, and will be described in detail hereinafter, but any well known form of joint may be used. The casing 14 is further provided with a slot 25 for the shank of the member 23. This slot has an offset portion to permit the reservoir to be partially rotated when locked. By means of this construction, the reservoir is arranged to be inserted and removed without removing the lamp from the vehicle.

It will be seen that the lamp is mounted in the most convenient position, and that it is rigidly connected to the body by means of the bracket so that the lamp is braced, and thus the vibration is reduced to a minimum. The fuel reservoir and the burner connected therewith can be easily removed from the lamp body without necessitating the removal of the lamp as a whole from the vehicle body.

In Fig. 1, the top is shown lowered and in this position will be above the mud guard. Now the lamp must be mounted low enough as not to burn the top, on the other hand, it must be mounted high enough so as to be out of the reach of mud and water, thrown up from the road. Both of these results are secured by mounting the lamp on the mud guard in the manner shown, and in addition the lamp will be located in the most convenient position.

In Fig. 5, the fastening bolt is provided with a shank 30 and collar 31. The mud guard and bracket are secured together by means of a nut 32, and the shank is provided with a nut 33, so that the lamp can be removed without disturbing the joint between the mud guard and the bracket.

In Fig. 6, the fastening bolt is provided with a head 41 preferably circular in cross section, and the nut 42 is arranged to clamp the mud guard to the bracket 17. Where the head 41 is thus reduced in size, a metal plate

or washer 40 is preferably interposed between the mud guard and head. The flange 15 in this case is provided with holes of the same diameter as the head, so that the heads act as dowel pins to position the lamp on the mud guard. The lamp body or casing 14 has secured to it a ring 43 provided with a recess 44 and a yielding portion 45 which extends over the recess. The ring is also provided with an inclined portion 46 and a recessed portion 47, provided with a shoulder 48. A block 49 is mounted upon a pin 50 on the reservoir, and the reservoir has also secured to it a flanged ring 51. After the lamp has been placed in position on the heads 41, the reservoir is placed in position so that the block 49 passes through the recess 44 in the ring 43. The reservoir is then rotated so that the block will snap into position in the recess 47, the spring finger 45 yielding so as to allow this action to take place. The inclined portion 46 will form a cam which will clamp the flanged ring 51 against the mud guard, as shown in Fig. 6, so as to securely clamp the parts together. The reservoir will be yieldingly maintained in position by means of the shoulder 48 against which the block 49 abuts, however, by rotating the reservoir in the opposite direction, the block will be released so that the reservoir and lamp can be removed.

It is obvious that various changes may be made in the details of construction without departing from this invention, and it is therefore, to be understood that this invention is not to be limited to the specific construction shown and described.

Having thus described the invention, what is claimed is:

1. The combination with a motor vehicle body and a mud guard secured thereto and having an opening therein, of a lamp mounted on said guard and having a portion extending below said guard and through said opening.

2. The combination with a motor vehicle body, its mud guard having an opening therein, and a bracket securing the guard to the body and attached to the guard adjacent said opening, of a lamp mounted on said guard at the opening and having a portion extending below the guard and through said opening.

3. The combination with a motor vehicle body and a mud guard therefor, of a lamp having a flange secured to said guard, a bracket secured to said body and supporting said lamp and said mud guard, a fuel reservoir for said lamp, and means for detachably securing said reservoir in position.

4. The combination with a motor vehicle body and a mud guard therefor, of a lamp mounted on said guard, a bracket secured to said body and to said guard at the point of attachment of said lamp, and a fuel reservoir for said lamp, said guard being provided with an opening for said reservoir.

5. The combination with a motor vehicle body and a mud guard therefor, of a lamp mounted on said guard, a bracket secured to said body and to said guard at the point of attachment of said lamp, a fuel reservoir for said lamp, said guard being provided with an opening for said reservoir, and means for latching said reservoir in position, whereby said reservoir may be removed and replaced through said opening.

6. The combination with a motor vehicle body and a mud guard therefor, of a lamp provided with a flange resting on said guard, a bracket secured to said body and provided with a portion extending underneath the guard and flange, and fastenings passing through said flange, guard and into the said bracket portion.

7. The combination with a motor vehicle body and a mud guard therefor, of a lamp provided with a flange resting on said guard, a bracket secured to said body and provided with a portion extending underneath the guard and flange, fastenings passing through said flange, guard and into said bracket portion, and packing rings between said guard and said flange and bracket portion.

8. The combination with a motor vehicle body having an offset portion and a mud guard for said body, of a lamp mounted on said guard, a bracket secured to said body underneath said offset portion and extending across said guard, and fastenings for securing said lamp to said bracket.

9. The combination with a motor vehicle body and a mud guard therefor provided with an opening, of a lamp mounted on the upper side of said guard and having a detachable portion extending through said opening.

10. The combination with a motor vehicle body, of a mud guard therefor, provided with an opening, and a lamp having a removable fuel reservoir extending through the opening, the body of the lamp being above and the fuel reservoir below the guard.

11. The combination with a motor vehicle body and a mud guard therefor, of a lamp mounted on said guard, a bracket secured to said body and to said mud guard at the point of attachment of said lamp, and means for detachably securing said lamp to said guard and bracket.

12. The combination with a motor vehicle body and a mud guard therefor, of a lamp mounted on said guard, a bracket secured to said body and extending across said guard, fastenings extending through said guard and bracket and provided with shanks extending through a part of said lamp, and nuts on said shanks for detachably securing said lamp in position.

13. The combination with a motor vehicle body and a mud guard therefor, of a lamp on said guard having its fuel reservoir extending below the guard and its wick adjusting member above said guard.

14. The combination with a motor vehicle body and a mud guard therefor, of a lamp mounted on said guard and comprising a fuel reservoir arranged below the guard and removable from the lamp and a wick adjusting member arranged above said guard.

In testimony whereof I affix my signature in presence of two witnesses.

RUSSELL HUFF.

Witnesses:
ALLEN LOOMIS,
R. M. HIDEY.

Copies of this patent may be obtained for five cents each, by addressing the "Commissioner of Patents, Washington, D. C."

362/159

A. LOOMIS.

MOTOR VEHICLE.

APPLICATION FILED MAY 23, 1910.

1,131,395.

Patented Mar. 9, 1915

2 SHEETS SHEET.

Fig. 1

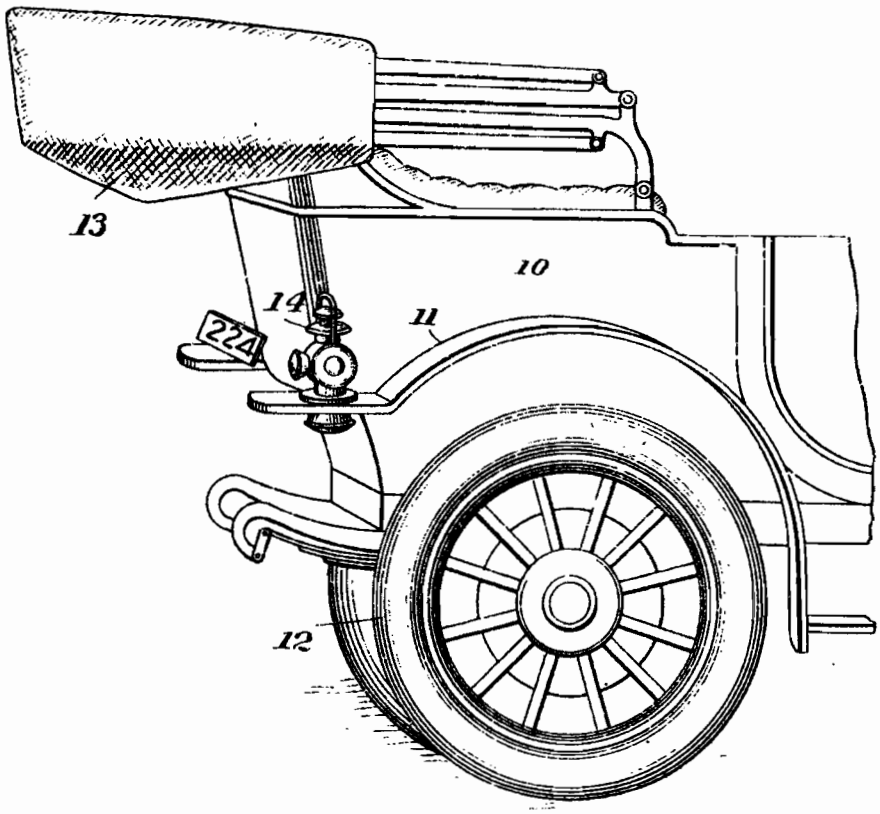

Witnesses

J. G. Hinkel

Cyril Brown.

Inventor

Allen Loomis.

by Foster Freeman Watson & Coit

Attorneys.

A. LOOMIS.

MOTOR VEHICLE.

APPLICATION FILED MAY 23, 1910.

1,131,395.

Patented Mar. 9, 1915.

2 SHEETS—SHEET 2.

Fig. 2.

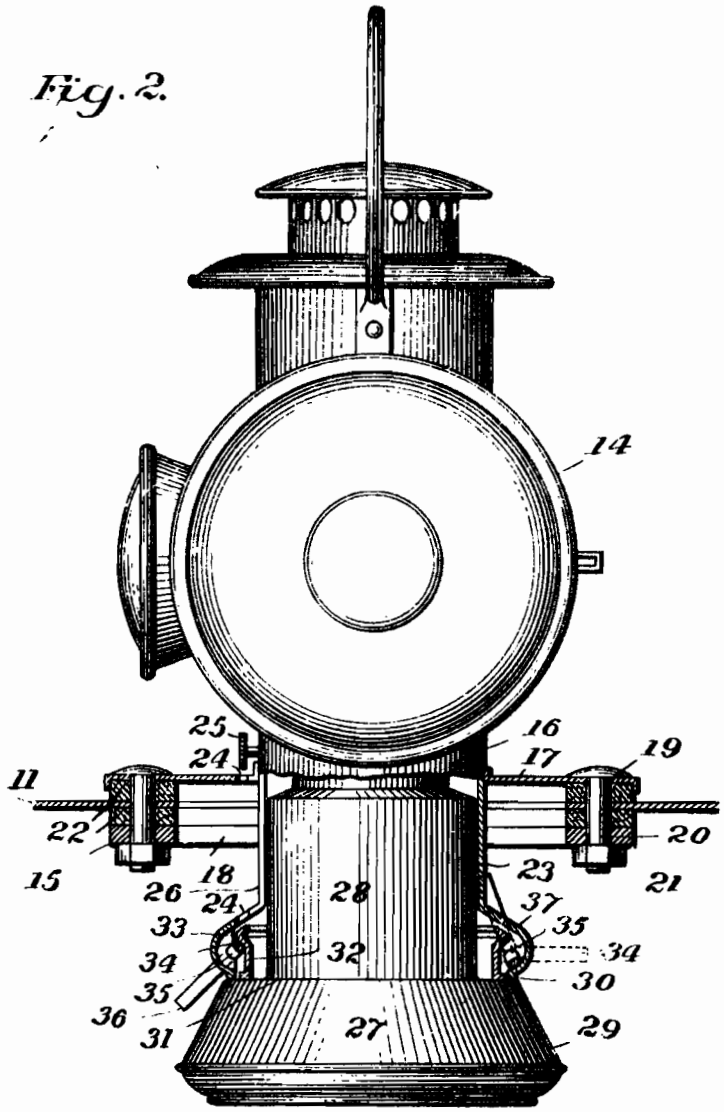

Witnesses

J. J. Stinkel

Cyril Brown.

Inventor

Allen Loomis

by Foster Freeman Watson & Coit

Attorneys

UNITED STATES PATENT OFFICE.

ALLEN LOOMIS, OF DETROIT, MICHIGAN, ASSIGNOR TO PACKARD MOTOR CAR COMPANY, OF DETROIT, MICHIGAN, A CORPORATION OF MICHIGAN.

MOTOR-VEHICLE.

1,131,395. Specification of Letters Patent. Patented Mar. 9, 1915.

Application filed May 23, 1910. Serial No. 563 029.

To all whom it may concern:

Be it known that I, ALLEN LOOMIS, a citizen of the United States, and resident of Detroit, county of Wayne, State of Michigan, have invented certain new and useful Improvements in Motor-Vehicles, of which the following is a specification.

This invention relates to motor vehicles and particularly to the lamps therefor and the means of attachment of the lamps to the vehicle.

The particular type of lamp in connection with which the invention is illustrated is the "tail lamp" which is usually suspended at the rear of the vehicle.

One of the objects of the invention is to construct a lamp and attaching means of simple and convenient form permitting the lamp to be securely attached to the body of the vehicle insuring it against excessive vibration and also permitting of the easy removal of the lamp from its support and of the fount from the lamp proper.

Another object of the invention is to so place the tail lamp on the vehicle rear fender, which fender is usually directly beneath a part of the vehicle top when the latter is in lowered position, that the main portion of the lamp, including the lenses, will be above the fender away from mud and dirt thrown up by the wheels and yet so that the lamp will be as low as possible on the vehicle to prevent the heat from the lamp scorching the top directly above it. This object is accomplished by extending the lower portion of the lamp through the fender and attaching the fount underneath the same.

Referring to the drawings, Figure 1 is a perspective view of a portion of a motor vehicle showing my invention incorporated therein; and Fig. 2 is an enlarged section through the tail lamp and the contiguous parts of the vehicle fender some of the parts of the lamp being shown in elevation.

The vehicle body is shown at 10 and to this the rear fenders 11 are secured in suitable positions over the rear wheels 12. The top 13 is shown in lowered position with an envelop covering the same. It will be noticed that a portion of this top is directly above the tail lamp 14 which is mounted on one of the fenders 11, but since the lower portion of the lamp is dropped through the fender the lamp is thus placed so low that there is no danger of scorching the material of the top.

In Fig. 2 the fender is shown at 11 and it is in part supported by a bracket 15 which is properly secured to the body of the vehicle, and this bracket 15 is of perforated disk form, the opening therein being large enough to receive the lower portion of the lamp. The body portion 16 of the lamp has a radially extending flange 17 secured thereto by any suitable means such as soldering, and this flange is somewhat larger than the opening 18 formed in the disk portion of the bracket 15 and forms the support for the lamp proper. Suitable holes 19 are drilled in the flange 17 to register with similar holes in the fender 11 and bracket 15 and these parts are all secured together by bolts 20 and nuts 21 with suitable wood or cork washers 22 respectively between the flange 17 and the fender 11 and the fender and the bracket 15, as shown particularly in Fig. 2.

The downwardly extending portion 23 of the lamp body is somewhat flared near its lower edge and this flared portion is provided with a T-shaped slot 24 as is also the flange 17 to permit the passage therethrough of the wick-turning spindle 25, and a vertical slot 26 is provided in the body portion for the same purpose. The fount 27 comprises an upper portion 28 which extends within and is surrounded by the body portion 23, and a lower enlarged portion 29 which may abut against the lower edge 30 of the body portion 23.

Secured to the shoulder 31 formed between the upper and lower portions of the fount is a ring 32 having an outwardly flared part forming a shoulder 33 against which the eccentric portions 34 of a pair of clamps 35 are adapted to rest when in the clamped position shown at the left in Fig. 2. The clamp is shown in inoperative position at the right in Fig. 2 and it may be moved from one position to the other by the handle 36. This clamping means alone is of well known construction. It will be understood that the clamping pieces 35 are journaled in the enlarged portions 37 of the lower flared part of the body portion 23 of the lamp. Thus the fount is detachably connected with the lower portion 23 of the lamp body without any rotative movement of the

fount relative to the body as is required with a bayonet joint lock and similar constructions.

What I claim and desire to secure by Letters Patent is:

The combination with a support having an opening therethrough, of a lamp having a body portion adapted to extend through the opening and having a flange on the body portion larger than the opening and adapted to be secured to the support, said flange being arranged on the body portion above the bottom thereof, a fount extending into the body portion and removable from below said support, means below the support for detachably securing the fount to the body portion, and an adjusting device for the lamp above said flange.

In testimony whereof I affix my signature in presence of two witnesses.

ALLEN LOOMIS.

Witnesses:

R. H. Allen,

A. H. Knight.

M. TIBBETTS.

DIFFERENTIAL GEARING FOR MOTOR VEHICLES.

APPLICATION FILED JUNE 14, 1910.

1,190,687. Patented July 11, 1916.

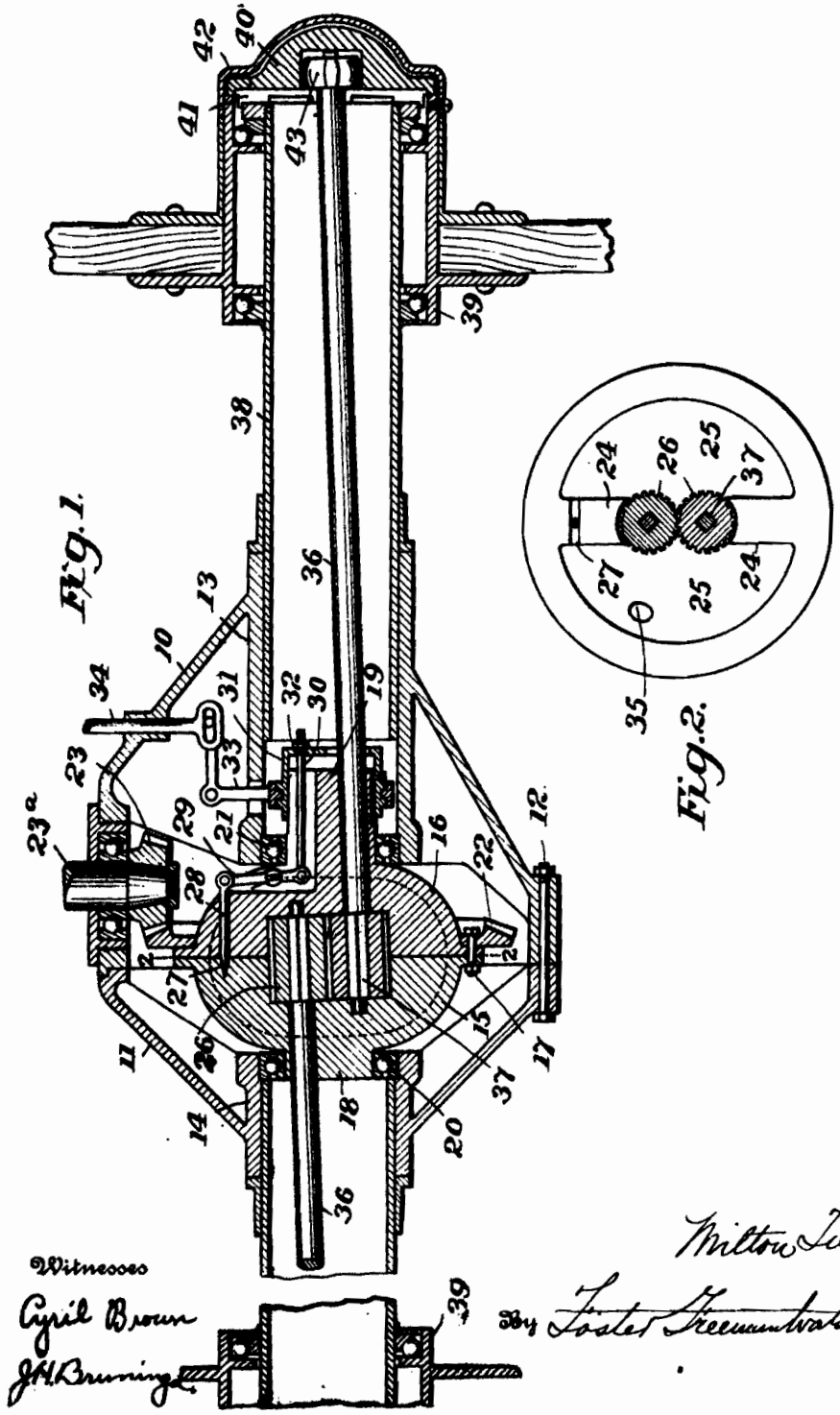

Witnesses

Cyril Brown

J. H. Bruninga

Inventor

Milton Tibbetts

By Foster Freeman Watson & Coit

Attorney

UNITED STATES PATENT OFFICE.

MILTON TIBBETTS, OF DETROIT, MICHIGAN, ASSIGNOR TO PACKARD MOTOR CAR COMPANY, OF DETROIT, MICHIGAN, A CORPORATION OF MICHIGAN.

DIFFERENTIAL GEARING FOR MOTOR-VEHICLES.

1,190,687. Specification of Letters Patent. Patented July 11, 1916.

Application filed June 14, 1910. Serial No. 566,886.

To all whom it may concern:

Be it known that I, MILTON TIBBETTS, a citizen of the United States, and resident of Detroit, county of Wayne, State of Michigan, have invented certain new and useful Improvements in Differential Gearing for Motor-Vehicles, of which the following is a specification.

This invention relates to differential or balance gearing, and particularly to two-gear differential gearing for motor vehicles. What may properly be termed a "two-gear differential mechanism" includes, first a differential gear support, second, a pair of meshing gears, third, axles or shafts for the gears and fourth, a pair of universal joints on the ends of the shafts. In such differentials as heretofore used, these joints have been placed usually within the differential support or at all events contiguous to the gears, resulting necessarily in great angularity at the joints and consequent friction and wear. In the present invention this angularity is very slight due to the fact that the universal joints have been placed in the widely separated driven members of a motor vehicle axle or jack shaft, thus permitting of a more simple form of universal joint and reducing friction and wear.

One of the objects of this invention is to construct a differential which will have a minimum number of parts, and therefore will be simple in construction and cheap to manufacture.

Another object is to provide a motor vehicle driving axle with a differential mechanism of a novel and simple construction and in which the road wheels may be slightly inclined to the vertical.

Another object is to provide a motor vehicle driving axle with a two-gear differential in which the axle sections are axially removable.

Another object is to construct the differential so that it may be retarded or locked and to construct the means for locking it so that it can be thrown into and out of operation.

These and other objects of the invention will appear from the detail description.

The invention will be described in connection with the accompanying drawings, in which,

Figure 1 is a longitudinal section through a differential, its housing, and the driven members; and Fig. 2 is a section on the line 2—2, Fig. 1.

In the form of the invention shown, and which has been chosen for illustrative purposes, the invention not being limited to the exact construction, the casing or support for the differential mechanism is a motor vehicle axle comprising a hollow rigid supporting structure composed of sections 10 and 11 detachably secured together by bolts 12 and being formed with inturned sleeves 13 and 14 into which tubes 38 extend and are rigidly secured by riveted or driven joints. Road wheels 39 constitute driven members rotatably mounted at the ends of the casing, and as shown they are wholly supported on the non-rotating axle or casing upon separated bearings 39'. The inturned sleeves above referred to also provide supports for bearings 20 and 21 in which are rotatably mounted the hubs 18 and 19 of a differential gear support which, as shown, is in two halves 15 and 16 secured together as by bolts 17 which also secure a bevel gear wheel 22 to the differential support. Said gear wheel 22 is driven by a pinion 23 on a driving shaft 23ᵃ which is also supported in bearings in the casing.

A two-gear differential mechanism which includes the support 15, 16, connects the driven members or wheels 39 and is arranged with its universal joints in the hubs of the road wheels. By such mechanism the road wheels are adapted to be driven, differentially, from the driving shaft 23ᵃ above referred to. Also, by arranging the universal joints of the differential mechanism in the road wheels as shown herein and as will be described more in detail, the wheels 39 may if desired be inclined to the vertical to give more room for the vehicle body between the upper parts of the wheels, without the use of any additional universal joints. The two gears of the differential mechanism are mounted in constant mesh with each other in the support 15, 16, being shown as spur gears and indicated at 26, and it will be seen that they are arranged diagonally in the support so that their extended axes will intersect the center lines of the road wheel bearings within the hubs of said wheels. Shafts or axle sections 36 extend between said gears and the hubs of the road wheels, being shown as removably con-

nected to their respective gears and connected to the wheel hubs by universal joints. These shafts which may also be termed axle sections or live axles, and which are out of alinement with each other are given a gyratory driving movement by the driving mechanism mounted at the middle of the axle. They are journaled in the hubs of the differential support which holds their inner ends out of the axis of rotation of the wheel hubs. Said inner ends are angular in shape, as shown at 37, so as to connect with the gears 26 and the outer ends of the shafts are in the form of angularly shaped heads 43 which engage similarly shaped recesses in pieces 40 which are removably secured to the outer ends of the hubs of the road wheels as by hub caps 42 and which form a driving connection with the wheels through interlocking projections and recesses 41 on the hubs and pieces 40. The heads 43 preferably have a loose fit with the recesses in the pieces 40, or they may be rounded as shown in Fig. 1, so that they will form with the recesses a universal joint.

It will be understood that the gears 26 are supported independently of the shafts so that they will remain in place when the shafts are withdrawn, also that said shafts may be withdrawn by removing the caps 42 and the pieces 40, and as easily replaced, without disturbing either the gears 26 or the differential support 15, 16.

For the purpose of providing a retarding means for the operation of the differential, the sections 15 and 16 are hollow, as shown in the drawings, and are divided into compartments or chambers 25 by means of inwardly extending partitions 24. Between these partitions is a passageway in which the intermeshing differential gears 26 are closely mounted. There is also a port or passage 27 connecting the compartments on opposite sides of the partitions. This port is arranged to be closed by a needle valve 28 which is connected to a lever 29 pivoted upon the differential support and connected to a rod 30 extending through a sleeve 31, which is splined upon the hub 19. The rod 30 and the sleeve 31 are arranged to be adjusted relatively by means of a nut 32 on the rod 30, which engages the end of the sleeve. The sleeve is arranged to be moved axially on the hub 19 by means of a bell crank lever 33 operated by a rod 34 which may be suitably connected to the steering gear (not shown) of the motor vehicle so that the passage 27 is open only while the vehicle is turning corners. In order that the chambers 25 formed in the differential support may be filled with or drained of a suitable liquid, an opening having a removable cap 35 is provided.

In the operation of the mechanism shown in Fig. 1 in which the axes of the wheels are in line instead of inclining slightly as they may be constructed with this mechanism without any change in form whatever, it will be understood that when the driving wheels are rotating in unison, as when the vehicle is moving in a straight line and the traction of the wheels is the same, there will be no relative movement whatever between the various elements of the differential mechanism, including the support 15, 16, the gears 26, the shafts 36 and the universal joints at 43, or between any of those elements and the wheels. In other words, there is no relative rotation of the shafts 36 and no movement, and consequently no wear, in the universal joints. The inner ends of the shafts being held out of alinement with the axis of rotation of the wheel hubs and connected by the gears 26, act in the nature of cranks, and are gyrated by the differential support thereby carrying the wheels around with them. But if there is a relative movement of the wheels, as when the vehicle is turning, there is a relative rotation of the gears 26 and their respective shafts 36 about their own axes and the universal joints act to adjust the shafts and wheels to the new relation. By filling the chambers 25 of the differential support with a suitable fluid, as oil, the gears 26 will act as an ordinary gear pump whenever there is any relative movement of the wheels, and transfer the oil from one chamber to the other. If the passage or port 27 is open the oil will readily return therethrough, thus permitting free movement of the gears, but if the port is closed or partly closed by the valve 28 the oil will be restricted in its return, and since the oil is not compressible to any extent, the movement of the differential gears will be retarded or the gears locked depending upon the exact position of the valve 28 and the leakage, if any. Since the movement of the differential gears is only necessary when turning corners, the rod 34 is preferably connected with the steering gear so that when the steering gear is turned the differential will be unlocked and when the steering gear is straight or approximately so, the differential will be locked. If the differential is locked and one wheel is off the ground or on a slippery place spinning of the wheel will be prevented.

It will be understood that the invention may also be applied to the counter or jack shaft of a chain driven vehicle, in which case the road wheels will be replaced by sprocket wheels which are connected by chains to the road wheels. It is to be understood therefore that the term "driven members" is to be construed as a broad term, so as to include both the constructions described and also equivalent constructions.

It will be noted that the axle sections or shafts are flexibly connected at their outer

ends to the driven members, and inflexibly connected at their inner ends with the gears 26. Any suitable form of flexible joint may be used.

It is obvious that various changes may be made in the details of construction without departing from this invention, and it is therefore to be understood that this invention is not to be limited to the specific construction shown and described. It is also obvious that some features of the invention are adapted to other forms of gearing or driving mechanism in which the particular form of differential gearing is not used.

Having thus described my invention what I claim and desire to secure by Letters Patent, is:—

1. In a differential mechanism, the combination with a pair of intermeshing gears, said pair of gears comprising all the gears of the differential mechanism, of fluid retarding means therefor.

2. In differential mechanism, the combination with a housing, of a pair of intermeshing gears therein, said pair of gears comprising all the gears of the differential mechanism, said housing being adapted to contain a fluid, and means within the housing coöperating with said gears to circulate the fluid and retard the movements of said gears.

3. In differential mechanism, the combination with a housing divided to form chambers and provided with a passage between the chambers, of a pair of intermeshing gears in said passage, and there being a controlling port between said chambers, said gears comprising all the gears of the differential mechanism.

4. In differential mechanism, the combination with a housing divided to form chambers and provided with a passage between the chambers, of a pair of intermeshing gears in said passage, and there being a port between said chambers, a valve for controlling said port, and means to open and close said valve, said plurality of gears comprising all the gears of the differential mechanism.

5. In differential gearing, the combination with a housing provided with a chamber, of radial partitions for said chamber forming a passage, a pair of intermeshing gears arranged in said passage, and coöperating with said partitions to form a pump, and one of said partitions having a controlled port therein.

6. In a differential gearing, the combination of a housing adapted to contain a liquid and having hubs on opposite sides thereof mounted in bearings, a partition in the plane of the axis of said hubs and dividing the interior of said housing in two separate chambers, intermeshing gears journaled in said partition, driven members, shafts extending through said hubs and engaging said gears and having a universal joint connection with said driven members, and a valve-controlled port through said partition and adapted to establish communication between said chambers.

7. A differential gearing for motor vehicles, comprising a housing adapted to contain a liquid, means for supporting said housing for rotation, a partition in said housing and dividing the interior thereof into two separate chambers, a pair of differential gears journaled in said partition and adapted to force the liquid from one of said chambers to the other, and valve-controlled means for establishing communication between said chambers.

8. A differential gearing for motor vehicles comprising a housing adapted to contain a liquid, means for supporting said housing for rotation, a partition in said housing and dividing the interior thereof into two separate chambers, a pair of differential gears journaled in said partition and adapted to force the liquid from one of said chambers to the other, a passage for conveying liquid from one of said chambers to the other counter to the flow due to the gears, a valve in said passage, and means for actuating said valve.

9. In a motor vehicle, the combination with a non-rotating axle and road wheels mounted at the ends thereof, of a two gear differential mechanism comprising a pair of diagonally arranged meshing gears, a pair of universal joints in the hubs of the road wheels, and non-flexible shafts extending directly from the gears to the universal joints, respectively.

10. In a motor vehicle, the combination with a non-rotating casing and driven members mounted on bearings at the ends thereof and having hubs, of a differential gear support, a pair of intermeshing gears mounted diagonally in said support so that their extended axes will intersect the center line of said bearings within said hubs, and shafts extending between said gears and said hubs respectively, and connected to the latter by universal joints.

11. In a motor vehicle, the combination with a non-rotating axle and road wheels mounted on bearings at the ends thereof, of a differential gear support, a pair of intermeshing gears mounted diagonally in said support so that their extended axes will intersect the center line of said bearings within the hubs of the road wheels, and shafts extending between said gears and said road wheel hubs respectively, and connected to the latter by universal joints.

12. In a motor vehicle, the combination with a non-rotating axle and road wheels mounted in bearings at the ends thereof, of

a differential gear support, a pair of intermeshing gears mounted diagonally in said support so that their extended axes will intersect the center line of said bearings within the hubs of the road wheels, and endwise removable shafts extending between said gears and said road wheel hubs respectively, and connected to the latter by universal joints.

13. A rear axle construction for vehicles comprising a hollow, rigid supporting axle carrying wheel hubs at its outer ends, two live axles out of alinement with each other each having an angular head at the outer end thereof, a cap connected with the wheel hub and operatively connecting each of said wheel hubs with the heads on the live axles, means for holding the inner ends of the live axles out of the axis of rotation of the wheel hubs, and means to connect the inner ends of said live axles to permit one to rotate around and in a different direction from the other.

14. A rear axle construction for vehicles comprising a rigid supporting axle having a wheel hub mounted thereon at each end thereof, two live axles out of alinement with each other within said rigid axle, each having an angular head on its outer end, means to loosely connect each live axle with the adjacent wheel hub, means to hold the inner ends of said axles out of alinement with the axis of rotation of the wheel hubs, a gear carried by the inner end of each live axle and in mesh with the gear on the adjacent live axle, and means to rotate one shaft to drive the wheel hubs.

15. A rear axle construction for vehicles comprising a rigid supporting axle having wheel hubs at its outer end, a revoluble sleeve within the rigid axle, means to rotate said sleeve, two live axles out of alinement with each other extending into the sleeve each axle having its axis out of alinement with the axis of rotation of the wheel hubs and having an angular head on its outer end, means connected with the wheel hubs for operatively and loosely connecting the angular head with the wheel hub, and means at the adjacent ends of the two live axles for permitting them to rotate in reverse directions when required and also to permit the inner ends of said axles to rotate around each other.

16. The combination with a hollow supporting axle, and wheels rotatably mounted at the outer ends thereof, of a differential gear support mounted to rotate in said axle, axle sections out of alinement with each other and extending from the wheel hubs to said gear support, universal joints connecting the outer ends of said axle sections with their respective wheel hubs, gears within said support connecting the inner ends of said axle sections and permitting relative rotation thereof in reverse directions, and means for rotating said gear support.

17. The combination with a hollow supporting axle, and wheels rotatably mounted and wholly supported upon the outer ends of said axle, of a differential gear support mounted to rotate in said axle, axle sections out of alinement with each other and extending from the wheel hubs to said gear support, loose driving connections between the outer ends of said axle sections and their respective wheel hubs, gears connecting the inner ends of said axle sections and permitting relative rotation thereof in reverse directions, and means for rotating said gear support.

18. The combination with a two-gear differential mechanism comprising a differential gear support, a pair of diagonally arranged shafts geared together and having their inner ends mounted in said support, and universal joints at the outer ends of said shafts, of a non-rotating vehicle axle supporting said differential mechanism and having wheels rotatably mounted at its outer ends, said universal joints being located within the hubs of said wheels, means connecting said universal joints with said wheel hubs, and means for rotating said differential gear support.

19. The combination w[illegible] supporting axle and whee[illegible] at the outer ends thereof, of a [illegible] in said supporting axle out of [illegible] with each other and extending [illegible] the wheel hubs inwardly toward the middle of the axle, universal joint connections between the axle sections and the respective wheel hubs, means for holding the inner ends of the axle sections out of the axis of rotation of the respective wheel hubs, and means for operating said [illegible] while permitting differential [illegible] between them.

20. The combination with a hollow supporting axle and wheels mounted at the outer ends thereof, of axle sections in said supporting axle out of alinement with each other and extending from the wheel hubs inwardly toward the middle of the axle, universal joint connections between the axle sections and the respective wheel hubs, and means at the middle of the supporting axle for imparting to said axle sections a gyratory driving movement while permitting differential action between them.

21. The combination with a hollow supporting axle and wheels mounted at the outer ends thereof, of axle sections in said supporting axle out of alinement with each other and extending from the wheel hubs inwardly toward the middle of the axle, universal joint connections between the axle sections and the respective wheel hubs, driving mechanism supported in bearings at the middle of the supporting axle, and

means connecting said driving mechanism to said axle sections for operating the latter and for holding the inner ends of the axle sections out of the axis of rotation of the respective wheel hubs and permitting differential action between them.

22. The combination with a hollow supporting axle and wheels rotatably mounted at the outer ends thereof, of axle sections out of alinement with each other and each out of alinement with the axis of rotation of the wheels, means including universal joints connecting the outer ends of said axle sections with the respective wheel hubs, rotatable driving mechanism in said axle, connections from said driving mechanism to the inner ends of said axle sections for imparting a gyratory movement to said axle sections, and means for rotating said driving mechanism.

In testimony whereof I affix my signature in presence of two witnesses.

MILTON TIBBETTS.

Witnesses:

GEO. A. SCHROEDER,

E. H. KING.

O. E. HUNT.

PUSH BUTTON SUPPORT FOR MOTOR VEHICLES.

APPLICATION FILED JULY 19, 1910.

1,094,789. Patented Apr. 28, 1914.

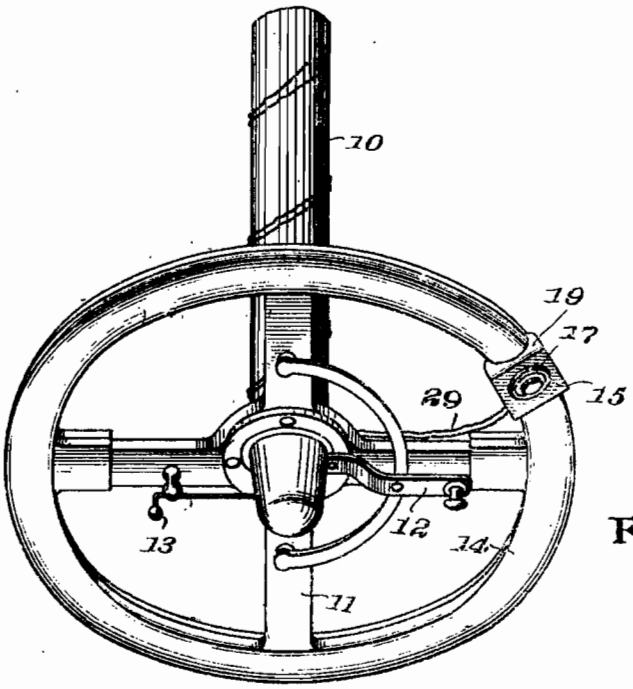

Fig. 1.

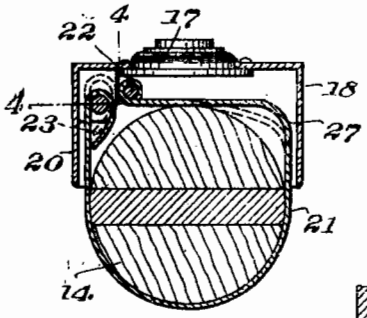

Fig. 2.

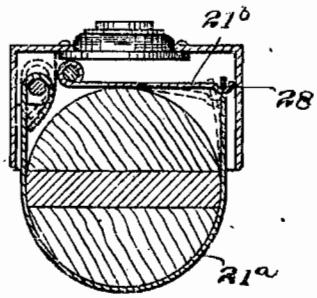

Fig. 3.

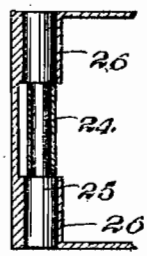

Fig. 4.

Witnesses

J. H. Bruninga.

C. S. Brown

Inventor

Ormond E. Hunt

By Foster Freeman Watson & Coe

Attorney

UNITED STATES PATENT OFFICE.

ORMOND E. HUNT, OF DETROIT, MICHIGAN, ASSIGNOR TO PACKARD MOTOR CAR COMPANY, OF DETROIT, MICHIGAN, A CORPORATION OF MICHIGAN.

PUSH-BUTTON SUPPORT FOR MOTOR-VEHICLES.

1,094,789. Specification of Letters Patent. Patented Apr. 28, 1914.

Application filed July 19, 1910. Serial No. 572,775.

To all whom it may concern:

Be it known that I, ORMOND E. HUNT, a citizen of the United States, and resident of Detroit, county of Wayne, State of Michigan, have invented certain new and useful Improvements in Push-Button Supports for Motor-Vehicles, of which the following is a specification.

This invention relates to push button supports and particularly to push button supports adapted to be mounted upon the steering wheels of motor vehicles.

The objects of this invention are to construct a support which may be readily attached and detached from the steering wheel, which is simple in construction, and which can be moved to any position on the steering wheel and retained thereon.

The invention will be described in connection with the accompanying drawings, in which—

Figure 1 is a plan view of an ordinary inclined steering post and the wheel mounted thereon, showing the invention applied thereto; Fig. 2 is a section through the support and the steering wheel; Fig. 3 is a similar section showing another form of support; and Fig. 4 is a partial section taken on the line 4—4, Fig. 2.

Referring to the drawings, 10 designates a steering post provided with a steering wheel 11, upon which are mounted the usual throttle controlling lever 12 and the spark controlling lever 13. The wheel is provided with the usual rim 14.

A support 15 for a push button 17 is provided with side flanges 18 and 20, and comprises end flanges 19, the latter conforming to the rim as shown in Fig. 1. A sheet metal band 21 preferably of sheet brass or other elastic material is secured at one end to the support by a cross pin 22 extending through an eye formed in the end of the band and through the support, and the other end is provided with a loop 23 which is arranged to engage a reduced portion 24 of a cross pin which extends through holes formed in a pair of separated lugs 26 on the support. The band is provided with a bent portion 27.

The loop 23 is of such diameter that the enlarged end of the pin can be easily slipped through it. In order to mount the support upon the wheel rim, the band is passed around the rim and the loop 23 is passed up into the hollow base between the bearing lugs 26. The band is then pinched against the rim of the wheel and the support slightly rotated so as to cause the bend 27 to straighten out slightly as shown in dotted lines thereby causing the band to be lengthened so that the pin can be passed through the loop 23. After the pin is in place and the support released, the band and its bend 27 will be restored to normal shortened position shown in solid lines causing the band to yieldingly clamp the rim. In this position, the engagement between the loop and the shoulders formed by the reduced portion of the pin, prevents removal of the pin until the band has again been lengthened. The pin 26 thus forms a latch which latches the support in position on the wheel, and the band itself which is elastic, forms a means for preventing releasing movement of the latch, and finally prevents the support from being detached.

Fig. 3 shows a slightly different form in which the band is made up of two pieces instead of one. These two pieces are connected by an eye in the piece 21^a engaging a hook 28 in the piece 21^b. The construction of this form is otherwise exactly the same as shown in Fig. 2, and the method of applying and removing the same from the wheel is also the same. This construction has certain advantages over that shown in Fig. 2, in that it does away with the more or less acute angle 27 in the band, and makes a somewhat stronger construction.

It will thus be seen that this invention provides a very efficient support for a push button which may be easily attached to and removed from the steering wheel, and which may be used to control an electrically operated signal or other mechanism. The electrical conductors connected to the push button are designated by the reference character 29 in Fig. 1. The support is slidably mounted on the rim so that it may be moved to any position thereon.

It is obvious that various changes may be made in the details of construction without departing from this invention, and it is, therefore to be understood that this invention is not to be limited to the specific construction shown and described.

Having thus described the invention, what is claimed is:

1. The combination with a motor vehicle steering wheel, of a push button support

thereon, and means for clamping said support to said wheel, including a latching device adapted to be released, to permit removal of said support by a rotative movement applied to the support.

2. The combination with a support for a push button, of a flexible attaching band connected thereto, latching means for detachably securing one end of said band to said support, said latching means being released by flexing said band.

3. The combination with a support for a push button, of a yielding attaching band connected thereto, latching means for detachably securing one end of said band to said support, said band normally holding said latching means against releasing movement and permitting the same to be released by flexing said band.

4. The combination with a support for a push button, of an attaching band connected thereto, latching means for detachably securing one end of said band to said support, and means whereby said band prevents release movement of said latching means.

5. The combination with a support for a push button, of a flexible attaching band connected thereto, latching means for detachably securing one end of said band to said support, and means whereby said band prevents release movement of said latch, said means being constructed to release said latch when said band is flexed.

6. The combination with a push button support having alined holes therein, of an attaching band having one end secured to said support, and having a loop at the other end, a pin adapted to pass through said holes and having a reduced central portion passing through said loop, whereby said pin is held in place when said band is under tension.

7. The combination with a support for a push button, of attaching means therefor, and securing means for said attaching means adapted to be released by a rotative movement of said support.

8. The combination with a support for a push button, of attaching means therefor, latching means for said attaching means, and means releasing said latching means when a rotative movement is applied to said support.

In testimony whereof I affix my signature in presence of two witnesses.

ORMOND E. HUNT.

Witnesses:

W. H. Finckel, Jr.,

C. I. Dale.

R. HUFF.

MOTOR VEHICLE TRANSMISSION MECHANISM.

APPLICATION FILED JULY 27, 1910.

1,122,120. Patented Dec. 22, 1914.

5 SHEETS—SHEET 1.

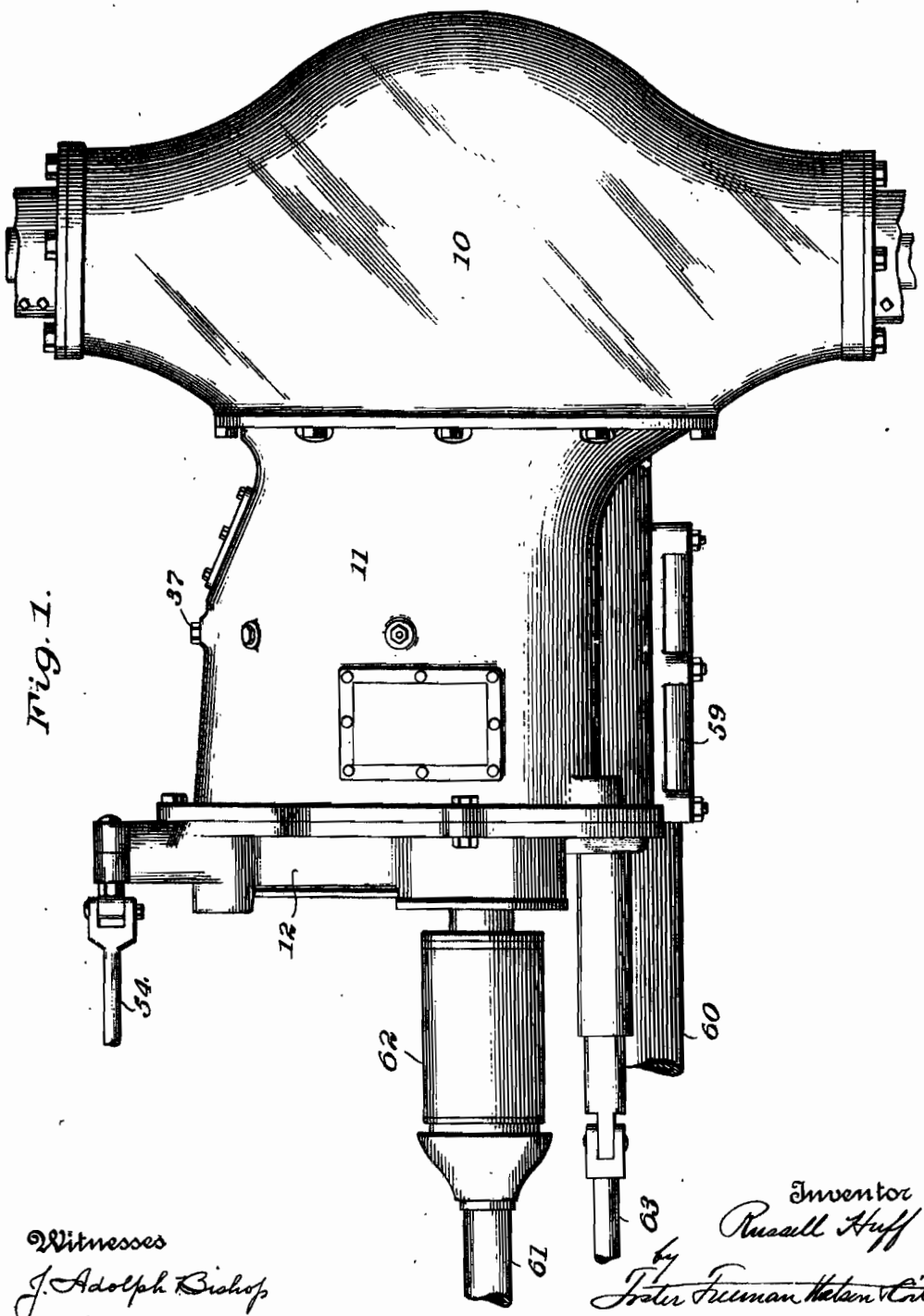

Fig. 1.

Witnesses
J. Adolph Bishop
J. H. Bruninga.

Inventor
Russell Huff
by
Foster Freeman Watson & Coit
Attorneys

R. HUFF.

MOTOR VEHICLE TRANSMISSION MECHANISM.

APPLICATION FILED JULY 27, 1910.

1,122,120. Patented Dec. 22, 1914.

5 SHEETS—SHEET 2.

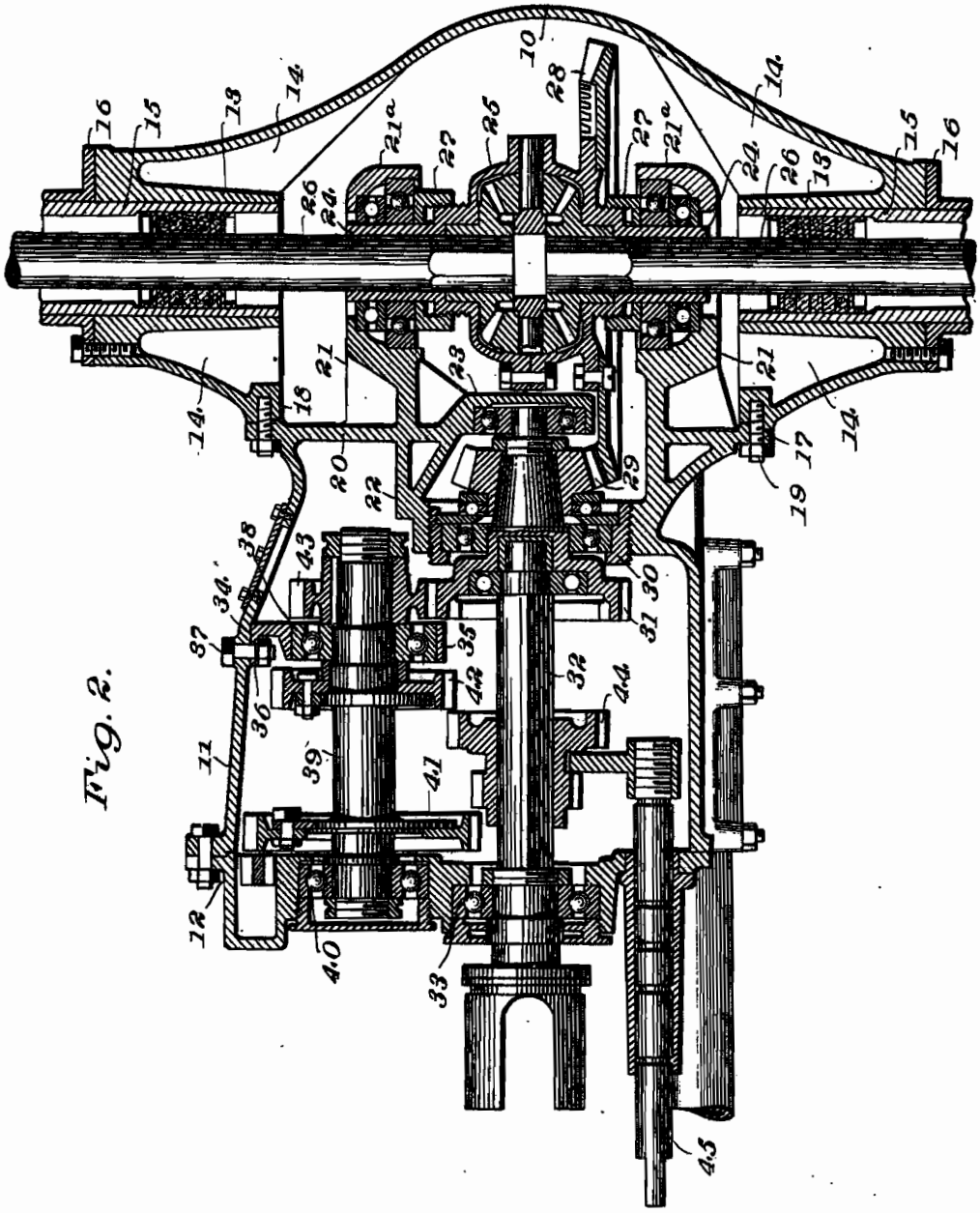

Fig. 2.

Witnesses
J. Adolph Bishop
J. H. Bruninga.

Inventor
Russell Huff
by Foster Freeman Watson & Coit
Attorneys

R. HUFF.

MOTOR VEHICLE TRANSMISSION MECHANISM.

APPLICATION FILED JULY 27, 1910.

1,122,120. Patented Dec. 22, 1914.

5 SHEETS—SHEET 3.

Fig. 3.

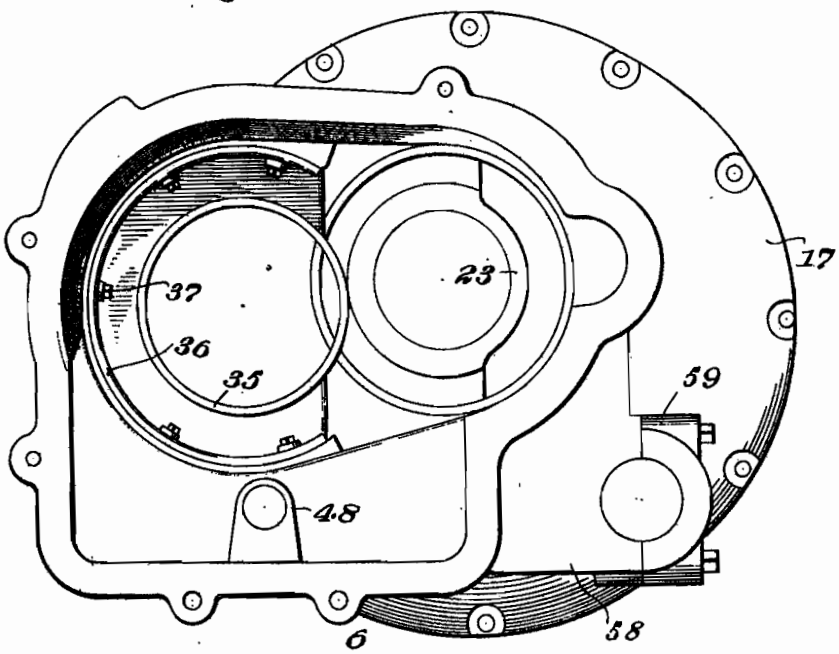

Fig. 5.

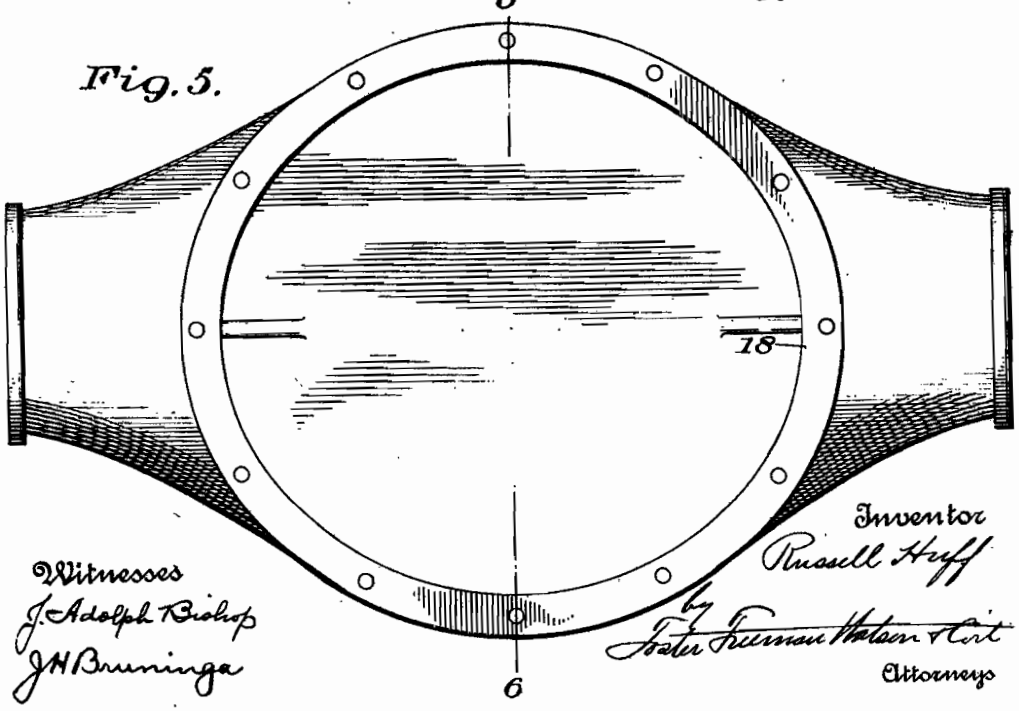

Witnesses
J. Adolph Bishop
J. H. Bruninga

Inventor
Russell Huff
by Foster Freeman Watson & Coit
Attorneys

R. HUFF.

MOTOR VEHICLE TRANSMISSION MECHANISM.

APPLICATION FILED JULY 27, 1910.

1,122,120. Patented Dec. 22, 1914.

5 SHEETS—SHEET 4.

Fig. 4

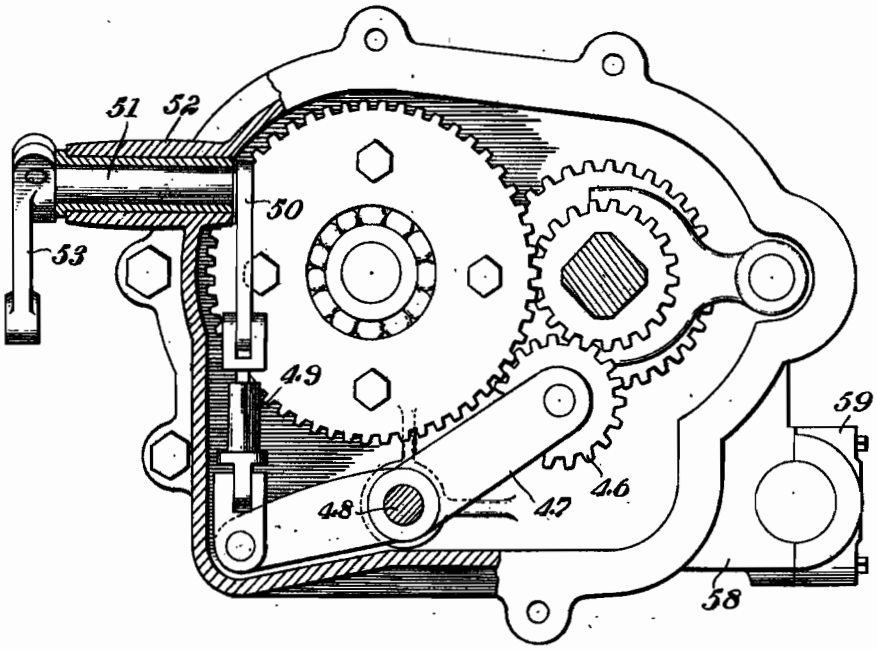

Fig. 6

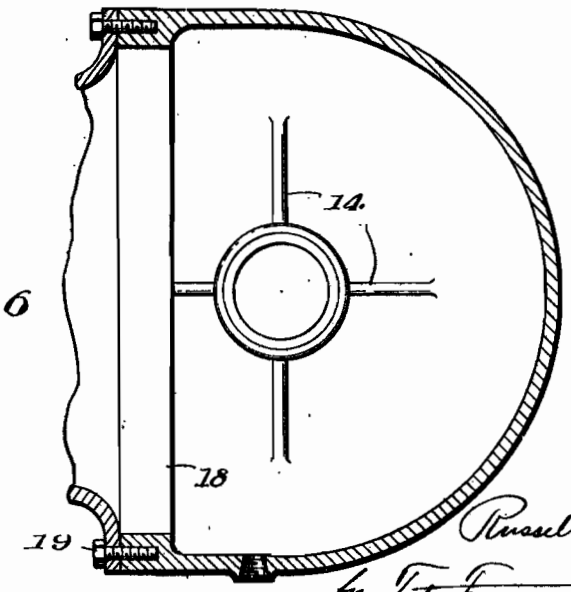

Witnesses
J. Adolph Bishop
J. H. Brunnga.

Inventor
Russell Huff
by Foster Freeman Watson & Coe
Attorneys

R. HUFF.

MOTOR VEHICLE TRANSMISSION MECHANISM.

APPLICATION FILED JULY 27, 1910.

1,122,120.

Patented Dec. 22, 1914.

5 SHEETS—SHEET 5.

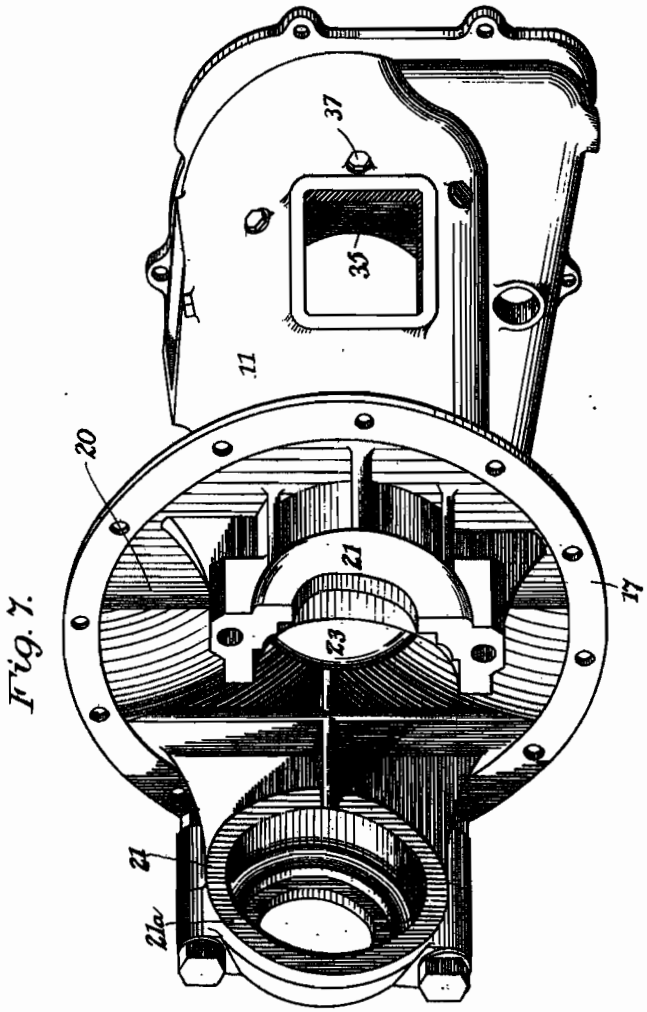

Fig. 7.

Witnesses
J. N. Bruninga.
M. C. Bender

Inventor.
Russell Huff
By Foster Freeman Watson Coit
Attorneys

UNITED STATES PATENT OFFICE.

RUSSELL HUFF, OF DETROIT, MICHIGAN, ASSIGNOR TO PACKARD MOTOR CAR COMPANY, OF DETROIT, MICHIGAN, A CORPORATION OF MICHIGAN.

MOTOR-VEHICLE TRANSMISSION MECHANISM.

1,122,120. Specification of Letters Patent. Patented Dec. 22, 1914.

Application filed July 27, 1910. Serial No. 574,199.

To all whom it may concern:

Be it known that I, RUSSELL HUFF, a citizen of the United States, and resident of Detroit, Wayne county, State of Michigan, have invented certain new and useful Improvements in Motor-Vehicle Transmission Mechanism, of which the following is a specification.

This invention relates to transmission mechanisms for motor vehicles, and in particular to that type in which the change speed and differential mechanisms are inclosed in a single or connected casings.

One of the objects of this invention is to simplify the construction of this type of mechanism.

Another object is to construct the mechanism so that the change speed and differential mechanisms may be attached to and removed from the vehicle as a unit, so that all adjustments, etc., may be made while the mechanism is removed from the vehicle and on the bench.

Another object is to so construct the connections to the casings that they may be readily broken to facilitate the easy removal and replacement of the transmission mechanism.

Another object is to construct the casing and the bearings for the gears so that the mechanism may be easily removed from its casing.

Another object is to construct the differential casing so as to permit a maximum clearance with maximum size of the driven bevel gear, and to construct this casing so that it is simple in construction and cheap to manufacture.

Further objects will appear from the detail description taken in connection with the accompanying drawings, in which—

Figure 1 is a plan view of the transmission mechanism; Fig. 2 is a longitudinal horizontal section through the mechanism shown in Fig. 1; Fig. 3 is an end view of the change speed casing with the front cover removed; Fig. 4 is a view similar to Fig. 3 with the gearing in place and a part of the cover shown in section; Fig. 5 is a front view of the differential casing; Fig. 6 is a section on the line 6—6, Fig. 5; and Fig. 7 is a perspective view of the change speed casing.

Referring to the drawings, 10 designates the differential casing, 11 the change speed casing bolted thereto, and 12 the end cover plate for the change speed casing.

The differential casing is preferably integral throughout, and is preferably cast of some light material as aluminum. It has its greatest diameter at the center and tapers toward the ends as shown, and the ends are provided with inwardly extending sleeves 13 connected by strengthening webs 14 to the casing walls. The sleeves 13 are bored to receive the axle casings 15 which are further secured to the differential casing by means of flanges 16, which are rigidly secured to the axle casings by a pressed fit or the like, and to the differential casing by means of bolts as shown.

The change speed casing 11 is provided with a flange 17, and the differential casing is provided with a coöperating inwardly extending flange 18, and these casings are secured together by bolts 19 passing through the flange 17 and into the flange 18 as shown in the drawings. The change speed casing is provided with an integral end wall 20 which has formed integral therewith a pair of spaced bearing lugs 21, 21, extending outwardly from the wall, a bearing lug 22 extending inwardly, and another bearing lug 23 located between the spaced bearing lugs 21. The bearing lugs 21 are preferably provided with removable caps 21[a] which are bolted to the bodies of the lugs 21, and these bearing lugs are arranged to receive antifriction bearings for supporting the hubs 24 of a differential mechanism 25. The differential mechanism is arranged to be connected with the axles 26 which are constructed to be removed axially therefrom, and the differential mechanism is arranged to be adjusted transversely, that is, longitudinally of the axles, by means of adjusting sleeves 27 which are adapted to be locked in place by suitable locking means not shown.

The differential mechanism 25 has bolted to it a driven bevel gear 28 which meshes with a driving bevel gear 29, supported at one end by an antifriction bearing in the bearing lug 23, and at the other end by antifriction bearings in a sleeve 30, which is adjustable in the bearing lug 22 as shown.

This construction of the bevel gears permits their adjustment relatively to each other in transverse directions so as to permit the mesh of the bevel gears to be closely adjusted. The sleeve 30, like the adjusting sleeves 27, is arranged to be locked in adjusted position by a suitable locking device.

The shaft for the driving bevel gear 29 has mounted upon it or formed integral therewith, a gear 31 provided both with external and internal teeth. This gear has mounted therein an anti-friction bearing which is arranged to support one end of an angular driving shaft 32, the other end of which is supported in an anti-friction bearing 33 in the end or cover plate 12. The casing 11 is machined as at 34, so as to form a finished bearing face for a ring 35. This ring is secured to the casing by means of bolts 37 passing through the casing and through a flange 36 on the ring. The ring is constructed to receive and support an antifriction bearing 38, which supports one end of a shaft 39, the other end being supported by an antifriction bearing 40 in the end plate 12. The shaft 39 has mounted thereon, gears 41, 42, and 43, the gears 42 and 43 being mounted on opposite sides of the bearing 38 and its supporting ring 35, and the internal diameter of the ring being slightly greater than the external diameter of the gear 43, so that this gear may be removed axially with its shaft through the ring.

The shaft 32 has slidingly mounted thereon a sleeve 44, provided with gears which are arranged to mesh with gears 41, 42, and to clutch with the internal teeth in the gear 31, so as to drive the bevel gear 29 at three different speed forward. This sliding sleeve 44 is arranged to be shifted longitudinally of the shaft 32 by means of a shifter rod 45, and a fork thereon.

A gear 46 is mounted at one end of a lever 47 which is pivoted in a bearing lug 48 in the casing 11, and in another bearing in the cover 12. The other end of the lever is connected by means of a link 49, and an arm 50 to a shaft 51 which is mounted in a bearing lug 52 on the cover. This shaft has mounted upon it an arm 53 to which is connected a link 54 which extends forwardly to a control lever. The gear 46 is a wide gear, and is constructed to mesh with the gear 41, and the smaller of the gears on the sleeve 44 when this sleeve is in the position shown in Fig. 2. By means of this train of mechanism, the shaft 32 is arranged to drive the driving bevel gear 29 in a reverse direction.

The casing 11 has formed thereon a lug 58 to which is bolted a cap 59 which is arranged to receive the usual torsion rod 60. The driving shaft 32 is connected to a propeller shaft 61 by means of a universal joint 62, and the shifting rod 45 has a detachable connection with a link 63 extending to a controlling lever.

It will be seen that the entire change speed and differential mechanism is mounted upon a single support, namely, the casing 11 so as to form a unit therewith and so as to be removable therewith. The power transmitting, the controlling, and the supporting connections to the change speed casing consisting of the propeller shaft, gear controlling links 54 and 63 and torsion rod 60, can all be broken, and by then removing the axles from the differential mechanism, and unbolting the change speed casing from the differential casing, the entire change speed mechanism can be removed from the vehicle as a unit. This is exceedingly advantageous since it permits all of the adjustments, etc., between the change speed gears as well as the bevel gears to be made while the mechanism is in the assembly room or on the bench. The adjustments, etc., can be of course more satisfactorily and expeditiously accomplished in the assembly room since the space is not so crowded as when the mechanism is in place on the vehicle.

It is desirable to construct the driven bevel gear 28 of as large a diameter as possible in order that the driving bevel gear may be of a large diameter, at the same time keeping the ratio large enough so that a comparatively high speed motor may be used without resorting to a constant reduction in the change speed casing and thereby necessarily cutting out the desirable direct drive. On the other hand, by increasing the size of the driven bevel gear a difficulty is encountered which necessarily limits its external diameter. This is road clearance, which must be as great as possible especially in the center of the car. The aperture in the differential casing must of course be large enough so as to permit the insertion in and removal from the same of the driving bevel gear which necessarily is large. The differential casing must also be provided with a flange into which the fastenings can pass. In accordance with this invention a maximum driven bevel gear diameter and a maximum clearance are obtained in the following manner. The flange 18 is constructed to extend inwardly so as to obviate the projection of the same outwardly from the differential casing. Now if the flange projects inwardly, the vertical diameter of the opening is necessarily narrow, so that it is less than the diameter of the bevel gear. In order therefore to permit the insertion of the bevel gear, the opening is made oblong with its longer axis or dimension horizontal, the longer dimension being greater than the diameter of the bevel gear so that the bevel gear may be placed in position in the casing by inserting the same in a horizontal position into the differential casing

and then turning the same in a vertical position. By means of this construction, the clearance and the driven bevel gear diameter may be made a maximum.

The ring 35 forms a support which is close to both of the gears 42 and 43. This forms a rigid bearing which prevents springing of the shafts and the gears thereon, and thus reduces vibration and noise considerably. The shaft 39 and its gears may be easily removed from the casing by unbolting the cover 12 and removing the shaft and its gears endwise, the gear 43 clearing the larger opening in the ring 35. The driving bevel gear 29, its shaft and the gear 31 may also be removed endwise by unscrewing the sleeve 30 from its bearing lug 22, and removing the ring 35. It will thus be seen that the casing and the bearings therein are so constructed that all of the gears may be removed therethrough endwise by unbolting the cover 12.

It is obvious that various changes may be made in the details of construction without departing from this invention, and it is therefore, to be understood that this invention is not to be limited to the specific construction shown and described.

Having thus described the invention, what is claimed is:

1. In a transmission mechanism for motor vehicles, the combination with change speed and differential mechanism, of separable casings inclosing said mechanism, and bearing supports for said differential mechanism integral with said change speed mechanism casing.

2. In a transmission mechanism for motor vehicles, the combination with change speed and differential mechanism, of separable casings inclosing said mechanism, and bearing supports for said differential mechanism integral with said change speed mechanism casing, and a detachable end cover for said casing.

3. In a transmission mechanism for motor vehicles, the combination with change speed and differential mechanism including driving and driven bevel gears, of separable casings inclosing said change speed and differential mechanism, and bearing supports for said bevel gears integral with said change speed mechanism casing.

4. In a transmission mechanism for motor vehicles, the combination with change speed and differential mechanism, of a casing for said differential mechanism, and a casing inclosing said change speed mechanism adapted to be secured to said differential casing and provided with integral bearing lugs for said differential mechanism.

5. In a transmission mechanism for motor vehicles, the combination with change speed and differential mechanism, of a casing for said differential mechanism having a front opening, a casing inclosing said change speed mechanism and provided with integral bearing lugs for said differential mechanism, and means for securing said change speed casing to said differential casing with the differential mechanism in position in its casing.

6. In a transmission mechanism for motor vehicles, the combination with change speed and differential mechanism, of a casing for said differential mechanism, a casing inclosing said change speed mechanism and adapted to be secured thereto and provided with integral bearing lugs for said differential mechanism, and driven shafts extending into said differential casing and having a detachable connection with said differential mechanism.

7. In a transmission mechanism for motor vehicles, the combination with change speed and differential mechanism, of a casing inclosing said change speed mechanism and having an integral end wall, and bearing lugs for said differential mechanism projecting from said wall.

8. In a transmission mechanism for motor vehicles, the combination with change speed and differential mechanism, of a casing inclosing said change speed mechanism and having an integral end wall, bearing lugs for said differential mechanism projecting from said wall, and a detachable end wall for the other end of the casing.

9. In a transmission mechanism for motor vehicles, the combination with change speed and differential mechanism including driving and driven bevel gears, of a casing inclosing said change speed mechanism and having an integral end wall, and bearings on said wall for one of said bevel gears.

10. In a transmission mechanism for motor vehicles, the combination with change speed and differential mechanism including driving and driven bevel gears, of a casing inclosing said change speed mechanism and having an integral end wall, and bearings on said wall for both of said bevel gears.

11. In a transmission mechanism for motor vehicles, the combination with change speed and differential mechanism including driving and driven bevel gears, of a casing inclosing said change speed mechanism and having an integral end wall, and bearing lugs projecting from said wall for said driven bevel gear.

12. In a transmission mechanism for motor vehicles, the combination with change speed and differential mechanism including driving and driven bevel gears, of a casing inclosing said change speed mechanism and having an integral end wall, a bearing lug on said wall for the driving bevel gear, and bearing lugs projecting from said wall for the driven bevel gear.

13. In a transmission mechanism for mo-

tor vehicles, a gear casing having an integral end wall, and a pair of spaced bearing lugs projecting therefrom.

14. In a transmission mechanism for motor vehicles, a gear casing having an integral end wall, a pair of spaced bearing lugs projecting outwardly therefrom, and a removable end wall for the other end of the casing.

15. In a transmission mechanism for motor vehicles, the combination with change speed and differential mechanism including driving and driven bevel gears, of a casing inclosing said change speed mechanism and having an integral end wall, and bearings for said bevel gears integral with said wall.

16. In a transmission mechanism for motor vehicles, the combination with change speed and differential mechanism including driving and driven bevel gears, of a casing inclosing said change speed mechanism and having an integral end wall, bearings in said wall for one of said bevel gears, and a detachable end wall for the other end of said casing, whereby said gearing may be removed therethrough endwise.

17. In a transmission mechanism for motor vehicles, the combination with change speed and differential mechanism, of a casing inclosing said change speed mechanism and having an integral end wall, a detachable wall for the other end of the casing, bearings for said change speed mechanism supported by said end walls, and bearings for said differential mechanism supported by said integral end wall.

18. In a transmission mechanism for motor vehicles, the combination with a change speed gearing and a differential mechanism, of a casing surrounding the change speed gearing, a detachable cover at one end of the casing, bearings for the change speed gearing in the casing and cover, and bearings for the differential mechanism in an integral extension of the casing.

19. In a transmission mechanism for motor vehicles, the combination with a change speed gearing and a differential mechanism, of a casing surrounding the change speed gearing, a detachable cover at one end of the casing, bearings for the change speed gearing in the casing and cover, bearings for the differential mechanism in an integral extension of the casing, and a casing surrounding the differential mechanism and connected with the first casing.

20. In a transmission mechanism for motor vehicles, the combination with driving and driven gears, of a support for said gears, a casing adapted to receive said driven gear vertically therein and having an oblong opening therein through which said driven gear is adapted to pass, and means for securing said support to said casing.

21. In a transmission mechanism for motor vehicles, the combination with driving and driven gears, of a support for said gears, a casing adapted to receive said driven gear vertically therein and having an oblong opening therein with its long axis horizontal through which said driven gear is adapted to pass, and means for securing said support to said casing.

22. In a transmission mechanism for motor vehicles, the combination with driving and driven bevel gears, of a support for said gears having a pair of bearing lugs for said driven gear thereon, a casing adapted to receive said driven gear vertically therein and having an oblong opening therein with its long axis horizontal through which said driven gear and its bearing lugs are adapted to pass, and means for detachably securing said support to said casing.

23. In a transmission mechanism for motor vehicles, the combination of a casing having an opening of greater diameter horizontally than vertically, of a differential gearing adapted to be housed in said casing with its bevel gear in a vertical plane, said bevel gear being larger than the vertical diameter of said opening but smaller than the horizontal diameter thereof, and said casings permitting the differential gearing to be turned while in said casing to remove it through said opening.

24. In a transmission mechanism for motor vehicles, the combination with a rear axle casing, having an oblong opening therein with its longer axis horizontal, of a driven gear adapted to be passed into said casing through said opening, and to be located vertically therein.

25. In a transmission mechanism for motor vehicles, the combination with a casing having an oblong opening therein with its longer axis horizontal, of a gear of larger diameter than the short axis of said opening but of smaller diameter than the long axis, said gear being adapted to be passed through said opening and arranged vertically in said casing.

26. In a transmission mechanism for motor vehicles, a differential casing comprising a single integral structure having integral sleeves projecting inwardly therein.

27. In a transmission mechanism for motor vehicles, the combination with a differential casing comprising a single integral structure having integral sleeves projecting inwardly therein, and axle tubes extending into said sleeves.

28. In a transmission mechanism for motor vehicles, the combination with a differential casing having integral sleeves projecting inwardly therein, of a support having bearing lugs for the differential projecting into said casing.

29. In a transmission mechanism for mo-

tor vehicles, the combination with a differential casing having integral sleeves projecting inwardly therein, of a change speed casing detachably secured to said differential casing.

30. In a transmission mechanism for motor vehicles, the combination with a differential casing having integral sleeves projecting inwardly therein, and having an opening therein, of a second casing detachably secured to said differential casing at said opening.

31. In a transmission mechanism for motor vehicles, the combination with a differential casing having integral sleeves projecting inwardly therein, of a second casing detachably secured to said differential casing and having a pair of bearing lugs thereon projecting into said differential casing.

32. In a transmission mechanism for motor vehicles, the combination with a differential casing having an inwardly projecting flange, of a support, and fastening means passing through said support and into said flange.

33. In a transmission mechanism for motor vehicles, the combination with a differential casing having an opening therein and an inwardly projecting flange at said opening, of means closing said opening, and fastenings securing said closing means to said flange.

34. In a transmission mechanism for motor vehicles, the combination with a differential casing having an oblong opening therein with the longer axis horizontal and an inwardly projecting flange at said opening, of a support adapted to be secured to said casing at said opening and to said flange, and a gear on said support adapted to be placed in said casing.

35. In a motor vehicle, the combination with change speed and differential mechanism, of a casing for said differential mechanism, a casing for said change speed mechanism detachably secured to said differential casing, bearings for said differential mechanism supported by and removable with said change speed casing, and detachable connections to said change speed casing extending forwardly thereof.

36. In a motor vehicle, the combination with change speed and differential mechanism, of a casing for said differential mechanism, a casing for said change speed mechanism detachably secured to said differential casing, bearings for said differential mechanism supported by and removable with said change speed casing, and detachable power transmitting and controlling connections extending forwardly of said change speed casing.

37. In a motor vehicle, the combination with change speed and differential mechanism, of a casing for said differential mechanism, a casing for said change speed mechanism detachably secured to said differential casing, bearings for said differential mechanism supported by and removable with said change speed casing, and detachable power transmitting, controlling, and supporting connections extending forwardly of said change speed casing.

38. In a motor vehicle, the combination with change speed and differential mechanism, of a casing for said differential mechanism having an opening at its forward side, a casing for said change speed mechanism, bearings for said differential mechanism supported by and removable with said change speed casing, said differential mechanism and casing being constructed to permit said differential mechanism to be inserted into and removed from said differential casing through said opening therein, means for detachably securing said change speed casing to said differential casing, and detachable connections to said change speed casing extending forwardly thereof.

39. In a motor vehicle, the combination with a bridge or axle casing having an opening in its forward side, of a change speed casing and gearing adapted to be detachably secured to the forward side of said axle casing, and a differential gearing mounted on said change speed casing adapted to be inserted rearwardly through said bridge opening and withdrawn forwardly therethrough, and housed by said bridge or axle casing while the change speed casing is secured in place, driving and gear controlling connections from the change speed casing to the forward part of the vehicle, and detachable couplings in said connections forward of the change speed casing adapted to permit the same to be withdrawn forwardly from the bridge.

40. In a transmission mechanism for motor vehicles, the combination with a casing, of alined driving and driven shafts mounted in said casing, a counter shaft, constantly meshing gears on the counter and one of the alined shafts, a second gear on the counter shaft, a sliding gear on the other alined shaft adapted to mesh with the second counter shaft gear, bearing supports for the countershaft at two points only and one of said supports being arranged between the gears thereon.

41. In a transmission mechanism for motor vehicles, in combination, a casing, parallel shafts in the casing, gears on each of said shafts, each of said shafts having bearing supports at two points only, a bearing for one of said shafts being arranged between two of the gears of that shaft.

42. In a transmission mechanism for motor vehicles, in combination, a casing, alined driving and driven shafts in said casing, a counter shaft, two gears on the coun-

ter shaft, a bearing for the counter shaft in the casing between said gears, and a sliding gear on one of the alined shafts having driving connections on either side of said bearing.

43. In a transmission mechanism for motor vehicles, in combination, a casing, alined driving and driven shafts in said casing, a counter shaft, two gears on the countershaft, a bearing support detachably secured in said casing between said gears and having a bearing seat of larger diameter than one of said gears, a bearing for the counter shaft in said support, and gears on the alined shafts adapted to mesh with the counter shaft gears.

44. In a transmission mechanism for motor vehicles, in combination, a casing, alined driving and driven shafts in said casing, a counter shaft, two gears on the countershaft, a bearing support detachably secured in said casing between said gears and having a bearing seat of larger diameter than one of said gears and smaller than the other of said gears, a bearing for the counter shaft in said support and adapted to be withdrawn therefrom with said counter shaft, and a sliding gear on one of the alined shafts adapted to mesh with the larger of the counter shaft gears and to move to a driving connection beyond said bearing.

45. In a transmission mechanism for motor vehicles, the combination with a differential casing having inwardly extending sleeves, of a detachable support having bearing lugs for the differential projecting into said casing between said sleeves.

46. In a transmission mechanism for motor vehicles, the combination with a differential casing having inwardly extending sleeves and having a transverse opening, of a support detachably secured to said casing for closing said opening and having bearing lugs for the differential arranged adjacent to and between the inner ends of said sleeves.

47. In a transmission mechanism for motor vehicles, the combination with a differential casing having inwardly extending sleeves and having a transverse opening, differential gearing having a bevel gear thereon, and a driving pinion for said bevel gear, of a detachable support secured to said casing over said opening and having bearings for said pinion and bearing lugs for the differential gearing projecting into the casing between said sleeves.

48. In a transmission mechanism for motor vehicles, in combination, a differential casing having an enlarged central part and tapering ends, tubes secured in said ends and extending inwardly toward the center of the casing, and a support having bearing lugs for the differential projecting into the casing between the inner ends of said tubes.

49. In a transmission mechanism for motor vehicles, in combination, a differential casing having an enlarged central part and tapering ends, said casing also having a transverse opening therein, tubes secured in said ends and extending inwardly toward the center of the casing, a differential mechanism, a driving pinion therefor, a support detachably secured to said casing at said opening and having bearings for said pinion and bearing lugs for said differential mechanism projecting into the casing between the inner ends of said tubes, and axially removable axle sections in said tubes extending into operative relation with said differential mechanism.

In testimony whereof I affix my signature in presence of two witnesses.

RUSSELL HUFF.

Witnesses:
C. I. Dale,
W. H. Finckel, Jr.

R. HUFF.

WIND SHIELD FOR MOTOR VEHICLES.

APPLICATION FILED JULY 30, 1910.

1,154,313.

Patented Sept. 21, 1915.

2 SHEETS—SHEET 1.

Fig. 1.

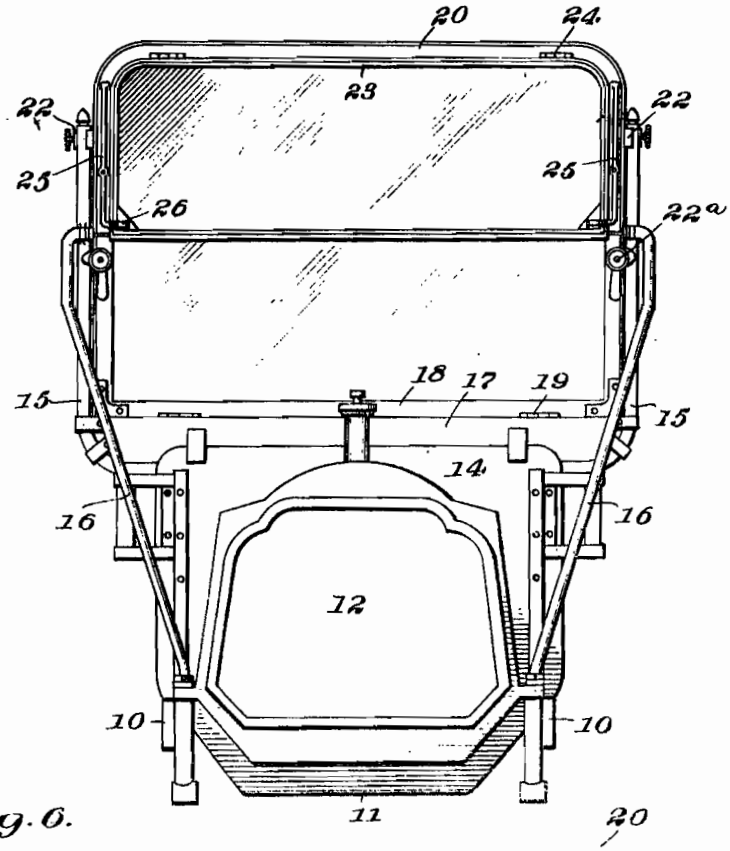

Fig. 6.

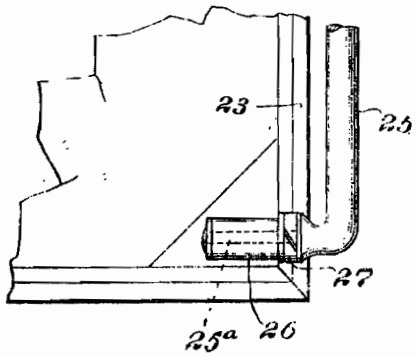

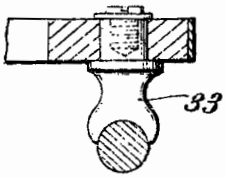

Fig. 7.

Witnesses

J. Adolph Bishop

J. H. Bruninga.

Inventor

Russell Huff

by Foster Freeman Watson & Coit

Attorneys

R. HUFF.

WIND SHIELD FOR MOTOR VEHICLES.

APPLICATION FILED JULY 30, 1910.

1,154,313. Patented Sept. 21, 1915.

2 SHEETS—SHEET 2.

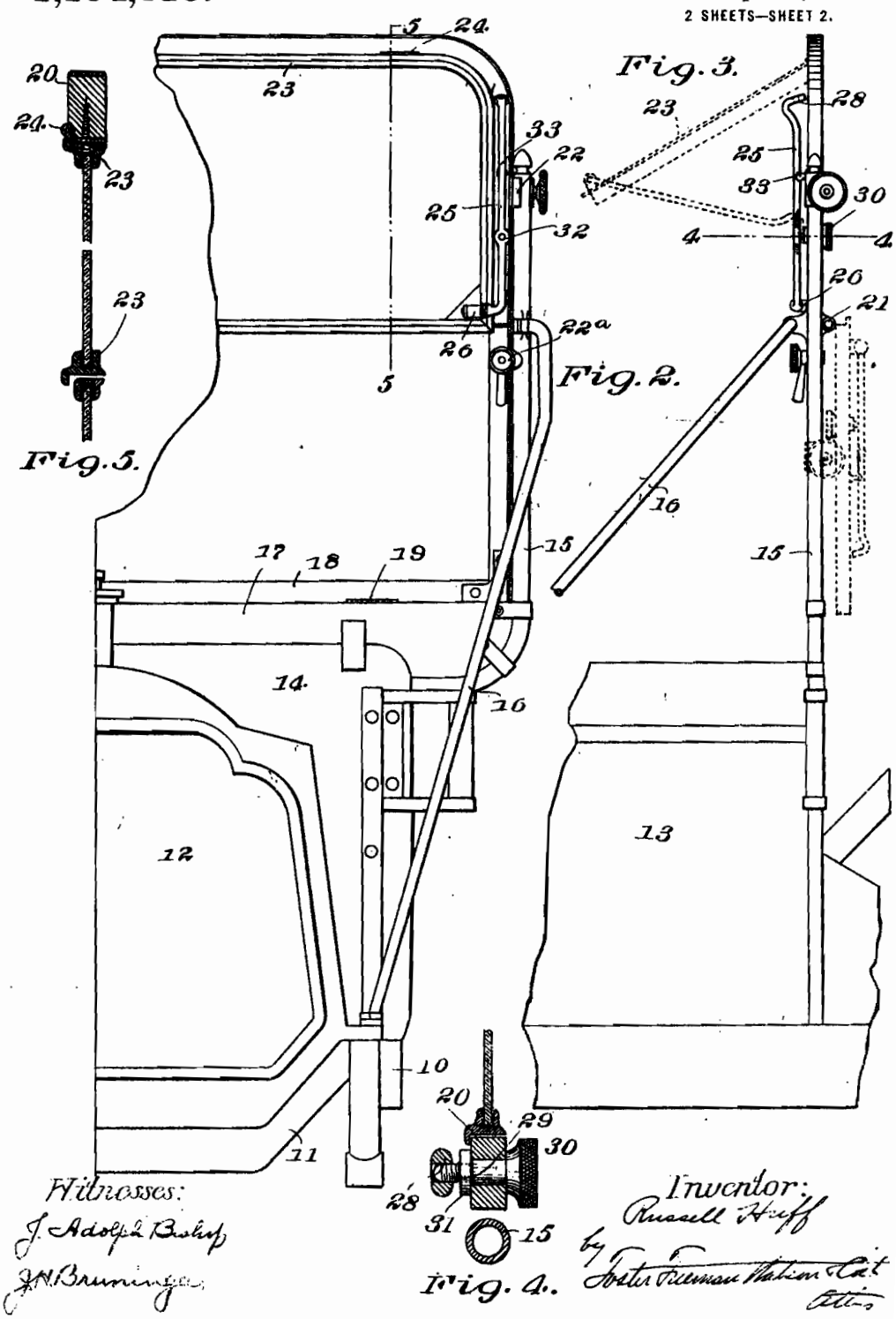

Witnesses:
J. Adolph Bishop
J. H. Brunings

Inventor:
Russell Huff
by Foster Freeman Watson & Coit
Attys

UNITED STATES PATENT OFFICE.

RUSSELL HUFF, OF DETROIT, MICHIGAN, ASSIGNOR TO PACKARD MOTOR CAR COMPANY, OF DETROIT, MICHIGAN, A CORPORATION OF MICHIGAN.

WIND-SHIELD FOR MOTOR-VEHICLES.

1,154,313. Specification of Letters Patent. Patented Sept. 21, 1915.

Application filed July 30, 1910. Serial No. 574,715.

To all whom it may concern:

Be it known that I, RUSSELL HUFF, a citizen of the United States, and resident of Detroit, Wayne county, State of Michigan, have invented certain new and useful Improvements in Wind-Shields for Motor-Vehicles, of which the following is a specification.

This invention relates to wind shields for motor vehicles and more particularly to wind shields of that type, in which one of the members can be adjusted to different positions, and which can be folded.

The objects of this invention are to construct a wind shield which will be simple in construction, which may be easily manipulated from the driver's seat, and which will not be liable to rattle.

The invention will be described in connection with the accompanying drawings, in which—

Figure 1 is a front view of a part of a motor vehicle, showing the wind shield attached thereto; Fig. 2 is a view similar to Fig. 1, but on an enlarged scale; Fig. 3 is an end elevation showing the wind shield in different positions; Fig. 4 is a section on the line 4—4, Fig. 3; Fig. 5 is a section on the line 5—5, Fig. 2; Fig. 6 is a detail view of the sash; and Fig. 7 is a detail view, showing an auxiliary clamp for the bracket, the sash and bracket being shown in section.

Referring to the drawings, 10 designates the side bars of a motor vehicle, 11 the front cross bar, 12 the radiator, 13 the motor bonnet, and 14 the dash. A pair of stanchions 15 are secured to the dash and are braced by forwardly extending brace rods 16. A base member 17 of the wind shield is secured to the dash and to the stanchions as shown and the lower section 18 of the wind shield is hinged thereto at its lower edge as shown at 19. The upper section 20 of the wind shield is hinged to the lower section at 21, so that the wind shield sections are hinged to each other and to the dash. A pair of clamps 22 have a sliding engagement with the stanchions and a pivotal engagement with the upper section 20, so that the sections may be placed and clamped in different angular positions with respect to each other, and folded as shown in dotted lines in Fig. 3. In order to provide for additional security, a pair of latches 22[a] may be provided.

The construction so far described is substantially that shown in application by Allen Loomis, Serial No. 397,573, filed October 15, 1907.

The upper section 20 forms a frame and has mounted therein a sash 23 which is hinged or pivoted at 24, so as to swing outwardly. A bracket 25 has one end 25[a] thereof pivotally mounted in a bracket 26 secured to the sash 23, and the joint is completed by a friction lock washer 27, whereby the joint between the bracket and the sash is tight, so that the bracket will not swing loosely in adjusting the sash from one position to another, and so that the parts will not rattle. The bracket is provided with an angular end 28 which is provided with a tapped hole arranged to engage the threaded shank 29 of a hand screw 30, which is rotatably mounted in the sash and restrained against endwise movement by means of the knurled head and a collar 31 rigidly secured to the shank of the hand screw. The bracket 25 is provided intermediate its ends with another tapped hole 32 which is adapted to be engaged by the threaded shank 29 with the free end of the bracket resting in a socket in a stud 33 on the outer face of the upper section which forms the frame for the sash, thus clamping the bracket to the outer face of said section and thereby clamping the sash in closed position. The stud 33 is shown in detail in Fig. 7. It is to be understood that the bracket and other devices are duplicated on the other side of the sash.

The sash may be inclined forwardly and maintained in that position as shown in dotted lines in Fig. 3 by the engagement of the threaded shanks 29 with the tapped holes in the ends of the bracket 25. In order to secure the sash in closed position in its frame, the brackets 25 are moved so as to lie parallel with the outer face of the frame of the upper section with the free end against the stud 33 so that the tapped holes 32 will be engaged by the hand screws to thereby clamp the bracket and the sash. The bracket will spring slightly, thus obviating any additional locking means or set screws for the hand screws 30. When the sash is locked in closed position, the upper section

can be folded against the lower section as shown in dotted lines in Fig. 3.

It will be noted that the clamps and pivots are of friction form thereby preventing rattle and liability of loose joints.

If the upper section is swung rearwardly, with the sash as shown in dotted lines in Fig. 3, until the frame of the upper section is substantially horizontal, and the parts secured in this position, it will be seen that the lower section will be inclined forwardly and the upper sash will be inclined so as to deflect the air, when the vehicle is moving forwardly, into the forward compartment.

It is obvious that various changes may be made in the details of construction, without departing from this invention, and it is therefore to be understood that this invention is not to be limited to the specific construction shown and described.

Having thus described the invention, what is claimed is:

1. In a wind shield for motor vehicles, the combination with a lower section, and an upper section adapted to fold against said lower section, of a sash pivoted to said upper section, a bracket pivoted to said sash for sustaining the sash in an inclined open position, said bracket being adapted to lie against said upper section when said sash is in closed position, means for securing said bracket in position, and supporting means pivotally connected with said sections at points on opposite sides of the pivotal connection between the sections.

2. In a wind shield for motor vehicles, the combination with a lower section, and an upper section adapted to fold against said lower section, of a sash pivoted to said upper section, a bracket pivoted to said sash for holding the sash in open and closed positions, said bracket being adapted to lie against said upper section when the sash is in closed position, means for securing said bracket in position, and supporting means pivotally connected with said sections at points on opposite sides of the pivotal connection between the sections.

3. In a wind shield for motor vehicles, the combination with a lower section, and an upper section adapted to fold against said lower section, of a sash pivoted to said upper section, a bracket pivoted to said sash for holding the sash in open position, said bracket being adapted to lie against one of said sections when the sash is closed, means for securing said bracket in different positions, and supporting means pivotally connected with said sections at points on opposite sides of the pivotal connection between the sections.

4. In a wind shield for motor vehicles, the combination with an upper folding section, of a sash pivoted within said section and adapted to open forwardly therefrom, a bracket to sustain the sash in open position, said bracket being adapted also to retain the sash in closed position and to lie against the forward face of the section when the latter is in such closed position, and means, attached to said upper section at a fixed point, adapted to be secured to said bracket at a plurality of points on the latter for the purpose of securing the sash.

5. In a wind shield for motor vehicles the combination with a swinging sash and a frame therefor, of a bracket arranged wholly in front of said frame and having a frictional joint connection with said sash, and means attached to said frame and adapted to engage and hold said bracket at a plurality of points on the latter.

6. In a wind shield for motor vehicles, the combination with a swinging sash and a frame therefor, of a bracket arranged wholly in front of said frame and having a frictional joint connection with said sash, means attached to said frame and adapted to engage and hold said bracket at a plurality of points on the latter, said means being disengaged from the bracket when the sash is swung.

7. In a wind shield for motor vehicles, the combination with a swinging sash and a frame therefor, of a bracket attached at one end to the sash and adapted when the sash is in closed position to rest at its other end against the frame, and means for drawing the central portion of the bracket toward the frame thereby securing the sash rigidly in closed position.

8. In a motor vehicle, the combination with a dash, of a pair of stanchions on the dash, a wind shield comprising pivotally connected upper and lower sections, means for slidably connecting the upper section to one of said stanchions. a swinging sash in said upper section, a bracket connected at one end to said sash, and means adjacent the point of connection of said upper section to said stanchion for supporting the other end of said bracket.

9. In a motor vehicle, the combination with a dash, of a pair of stanchions on the dash, a wind shield comprising pivotally connected upper and lower sections and the lower section being adapted to swing relatively to the dash, a clamp having a sliding connection with one of said stanchions and a pivotal connection with said upper section, a swinging sash in said upper section, and a bracket connected at one end to said sash and at the other end to said upper section.

10. In a motor vehicle, the combination with a dash, of a wind shield mounted above and pivoted to the dash, and comprising a pair of pivotally connected upper and lower sections, a supporting stanchion on the dash at each side of the wind shield

rising to a point adjacent the center of the upper section, connections from the upper section to the upper end of the stanchions when the section is in normal position, a sash within the frame of the upper section and pivoted thereto and adapted to swing forwardly to open position, and a bracket to sustain the sash in open position and extending from the sash to the frame of the upper section at a point adjacent the latter's connection with the stanchion.

11. In a motor vehicle, a wind shield comprising, upper and lower sections, a sash hinged at its top in the upper section, means for preventing said sash from swinging rearwardly of the upper section, and means for holding the sash in a plurality of positions and including a fixed clamping device on said upper section, and a bracket pivoted to the sash and adapted to be engaged at its end by said clamping device to hold the sash in open position and between its ends to hold the sash in closed position.

12. In a motor vehicle, a wind shield comprising, upper and lower sections, a sash hinged at its top in the upper section, means for preventing the sash from swinging rearwardly of the upper section, and means for holding the sash in open and closed positions and including a screw fixed in the upper section and projecting from the forward side thereof, and a bracket pivoted to the front of the sash and provided with openings adapted to be engaged by said screw when the sash is in the open and closed positions.

13. In a wind shield for motor vehicles, the combination with a lower section hinged to suitable supporting means, an upper section hinged to the lower section and means for guiding said sections so that the swinging of the upper section in either direction causes a to and fro swinging movement of the lower section, of a sash pivoted at its upper edge to said upper section, and means for holding said sash in an inclined position relative to said upper section.

14. In a wind shield for motor vehicles the combination with suitable supporting means, a lower section hinged to said supporting means, an upper section hinged to said lower section, and means for guiding said sections so that the swinging of the upper section in either direction causes a to and fro swinging movement of the lower section, of a sash pivoted at its upper edge to said upper section, and means adapted to hold said sash and the lower section in substantially parallel inclined positions.

15. In a wind shield for motor vehicles, the combination with suitable supporting means of a lower section hinged to said supporting means, an upper section hinged to said lower section, and means for guiding said sections so that the swinging of the upper section in either direction causes a to and fro swinging movement of the lower section, of a sash pivoted at its upper edge to said upper section, and means for supporting said sash in open position with its lower edge elevated above the plane of said upper section.

In testimony whereof I affix my signature in presence of two witnesses.

RUSSELL HUFF.

Witnesses:
C. I. Dale,
W. H. Finckel, Jr.

Pages?

R. HUFF.

RADIATOR SUPPORT FOR MOTOR VEHICLES.

APPLICATION FILED JULY 30, 1910.

1,067,737. Patented July 15, 1913.

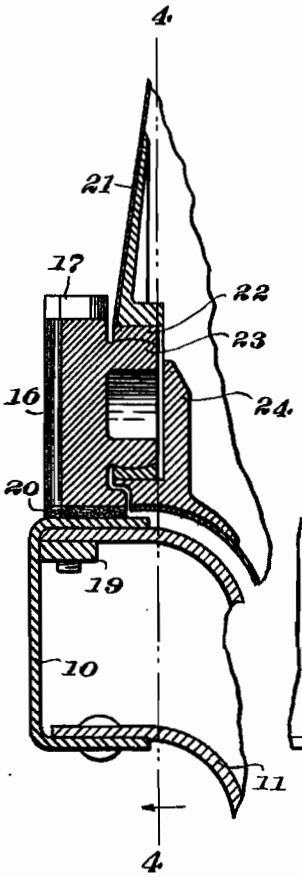

Fig. 3.

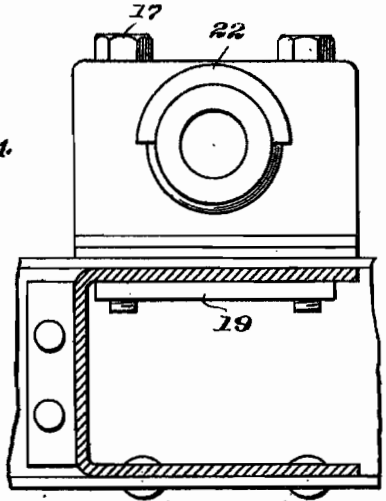

Fig. 4.

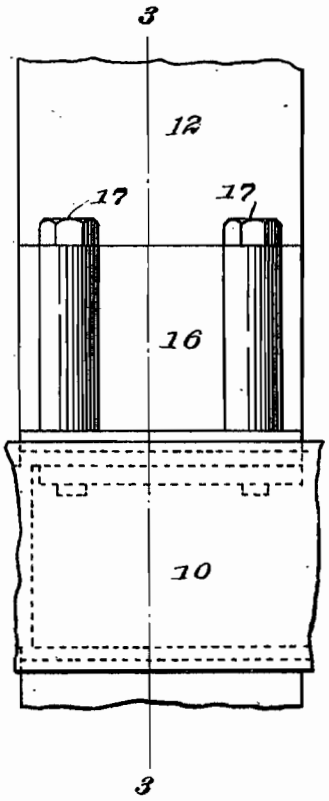

Fig. 2.

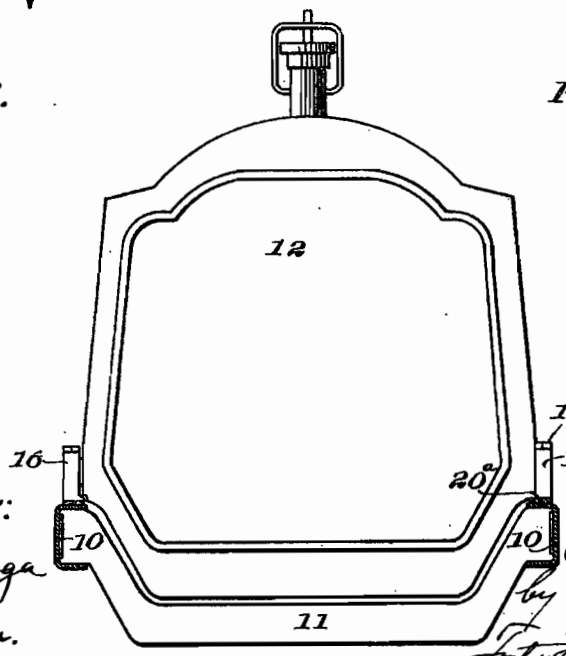

Fig. 1.

Witnesses:
J. H. Bruninga
C. S. Brown.

Inventor:
Russell Huff
by
Foster Freeman Watson & Coe
Attys

COLUMBIA PLANOGRAPH CO., WASHINGTON, D. C.

UNITED STATES PATENT OFFICE.

RUSSELL HUFF, OF DETROIT, MICHIGAN, ASSIGNOR TO PACKARD MOTOR CAR COMPANY, OF DETROIT, MICHIGAN, A CORPORATION OF MICHIGAN.

RADIATOR-SUPPORT FOR MOTOR-VEHICLES.

1,067,737. Specification of Letters Patent. Patented July 15, 1913.

Application filed July 30, 1910. Serial No. 574,733.

To all whom it may concern:

Be it known that I, RUSSELL HUFF, a citizen of the United States, and resident of Detroit, Wayne county, State of Michigan, have invented certain new and useful Improvements in Radiator-Supports for Motor-Vehicles, of which the following is a specification.

This invention relates to motor vehicles and particularly to means for supporting the radiator from the vehicle frame.

One of the objects of this invention is to provide simple and efficient means for supporting the radiator so that the twisting movements of the frame will not be communicated to the radiator so as to loosen its joints.

Another object is to construct the supporting means so that it will support the radiator against tipping movement.

Further objects will appear from the detail description, taken in connection with the accompanying drawings, in which—

Figure 1 is a front elevation of the radiator and side bars of a motor vehicle, the side bars being shown in section; Fig. 2 is a side elevation showing one of the supporting brackets; Fig. 3 is a section on the line 3—3, Fig. 2; and Fig. 4 is a section on the line 4—4, Fig. 3, looking in the direction of the arrow.

Referring to the accompanying drawings, 10 designates the side bars of a motor vehicle, and 11 the cross bar connecting the side bars and conforming to the shape of the radiator 12 supported on the side bars substantially above the cross member 11. A bracket 16 is secured to one of the side members by means of bolts 17 passing through the upper flanges of the side member 10 and the cross member 11, and threaded into a bar 19. A strip of leather 20 is interposed between the bracket 16 and the side member. A bracket 21 is secured to the radiator frame and is provided with a socket arranged to receive a bearing sleeve or bushing 22 which is provided with a concave bearing seat arranged to engage a convex bearing face on a trunnion 23 integral with the bracket 16. The bearing sleeve is split longitudinally and is arranged to slide longitudinally in the socket in the bracket 21, and the bracket is provided with a stop 24 which limits the inward movement of the bearing sleeve in its socket. The other side of the radiator is supported from the side bar by a bracket 16^a which is bolted to the side member 10 by means of bolts 17^a similar to that shown in Fig. 3. In this case, however, the bracket 16^a is rigidly connected to the radiator frame by being bolted thereto or in any other suitable manner. There is thus a rigid connection between the right hand end of the radiator and the side member 10, but the leather strip 20^a interposed between the bracket and the side member permits of a slight relative movement between these two members. It will thus be seen that the radiator is supported from the side bars by means of a substantially rigid connection to one of the side bars and by a flexible connection to the other. This flexible connection being a universal joint connection, the convex concave bearing surfaces of the trunnion and the sleeve or bushing 22 permit play between the radiator and the frame, so that the twisting movement of the frame will not be communicated to the radiator so as to break open soldered joints. This construction has the additional advantage that no auxiliary support need be provided for supporting the radiator against forward and backward tipping movement. In prior constructions, it has been found necessary to provide a tie-rod or the like which connects the top of the radiator with the dash. In this construction, the tie-rod can be dispensed with, in view of the rigid connection to one of the side bars, and at the same time the flexible connection to the other side bar prevents transmission of the twisting movements to the radiator frame.

The construction of the sleeve or bushing 22 permits the parts to be readily disassembled by unbolting the bracket 16 and removing the bracket and its trunnion with the split sleeve from the socket in the bracket 21 when the sleeve can be readily removed. When the bushing and trunnion are in place, the stop and the inner face of bracket 16 prevent removal thereof and hold it in position. In Fig. 4, the bracket is shown removed from the radiator and one of the parts of the split sleeve has also been removed leaving only the upper one in place. By projecting the trunnion inwardly the outer face of the bracket is left smooth, resulting in a neat construction.

It is obvious that various changes may be made in the details of construction with-

out departing from this invention, and it is, therefore, to be understood that this invention is not to be limited to the specific construction shown and described.

Having thus described the invention, what is claimed is:

1. In a motor vehicle, the combination with the frame having side bars, and a radiator, of a flexible connection between the radiator and one of said side bars, and a substantially rigid connection between the radiator and the other of said side bars.

2. In a motor vehicle, the combination with the frame having side bars, and a radiator, of a flexible connection between the radiator and one of said side bars, and a connection between the radiator and the other of said side bars constructed to support said radiator against tipping longitudinally of the vehicle.

3. In a motor vehicle, the combination with the frame having side bars, of a radiator, and means for supporting said radiator on said side bars and including a universally yieldable connection with one of the side bars and a connection with the other side bar yieldable in but one direction.

4. In a motor vehicle, the combination with the frame having side bars, of a radiator, and means for supporting said radiator including a universal joint connection with one of the side bars and a connection with the other side bar, preventing the radiator from tipping longitudinally of the vehicle, and cushioning means in said connections.

5. In a motor vehicle, the combination with the frame having side bars, and a radiator, of means for supporting said radiator on said side bars including a universal joint connection to one of said side bars and a substantially rigid connection to the other of said side bars.

In testimony whereof I affix my signature in presence of two witnesses.

RUSSELL HUFF.

Witnesses:
W. H. FINCKEL, Jr.,
C. I. DALE.

Copies of this patent may be obtained for five cents each, by addressing the "Commissioner of Patents, Washington, D. C."

V. LINK.

FOLDING STARTING CRANK.

APPLICATION FILED AUG. 18, 1910.

1,059,884. Patented Apr. 22, 1913.

Fig. 1.

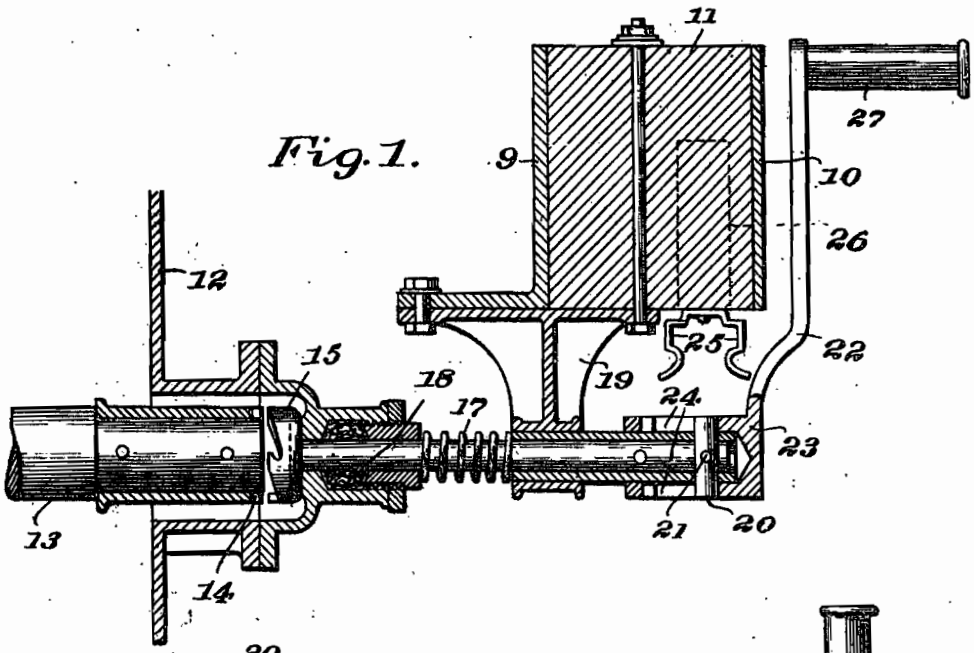

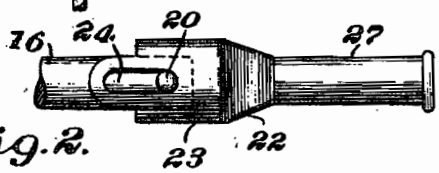

Fig. 2.

Fig. 4.

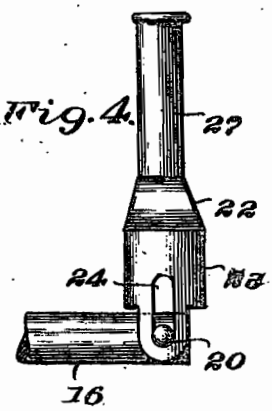

Fig. 3.

Fig. 5.

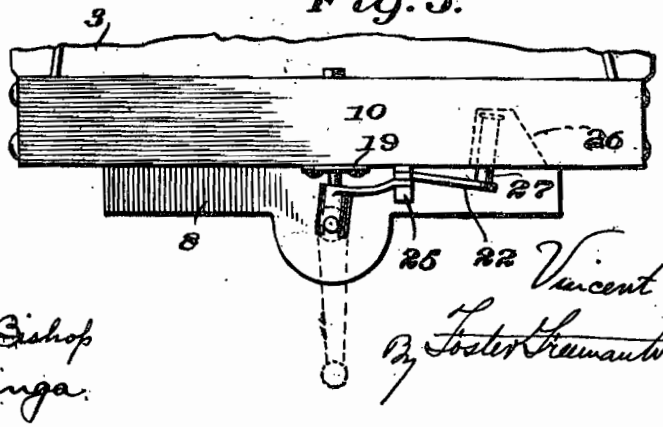

Witnesses

J. Adolph Bishop

J. H. Bruninga

Inventor

Vincent Link

By Foster Freeman Watson & Coit

Attorneys

UNITED STATES PATENT OFFICE.

VINCENT LINK, OF DETROIT, MICHIGAN, ASSIGNOR TO PACKARD MOTOR CAR COMPANY, OF DETROIT, MICHIGAN, A CORPORATION OF MICHIGAN.

FOLDING STARTING-CRANK.

1,059,884. Specification of Letters Patent. Patented Apr. 22, 1913.

Original application filed February 15, 1909, Serial No. 477,933. Divided and this application filed August 13, 1910. Serial No. 577,118.

To all whom it may concern:

Be it known that I, VINCENT LINK, a citizen of the United States, and resident of Detroit, Wayne county, State of Michigan, have invented certain new and useful Improvements in Folding Starting-Cranks, of which the following is a specification.

This invention relates to starting cranks for hydrocarbon motors, and particularly to starting cranks which are adapted to be used with truck motors.

This application is a division of my prior application, Serial No. 477,933, filed February 15, 1909.

In most trucks in which the crank shaft of the motor is arranged longitudinally near the front of the vehicle, a starting crank in employed which projects forwardly of the frame in order that it may be in convenient position for cranking the motor. On account of its position therefore, the starting crank is frequently bent or broken by contact with obstructions met with in the use of the truck. Detachable starting cranks have been used to some extent but are unsatisfactory because they are liable to be lost. One of the objects of the present invention therefore is to provide a starting crank which will project beyond the frame in a convenient position for use in starting the motor, and which when not in use may be folded to a safe position within the margin of the frame and where it will be protected from accidental injury. Notwithstanding its ability to fold, the structure of the crank is such that it makes a firm and rigid connection with the starting crank when in operative position.

The invention will be described in connection with the accompanying drawings, in which—.

Figure 1 is a vertical longitudinal section through the forward part of a truck frame and the starting crank connections; Fig. 2 is a bottom view of the starting crank shown in Fig. 1; Fig. 3 is a similar view to Fig. 2 with the starting crank ready to fold; Fig. 4 is a similar view to Fig. 2 with the starting crank folded; and Fig. 5 is a front view of a part of the truck frame showing the handle in two positions.

Referring to the drawings, 9 designates a cross bar which has secured thereto by a steel strap 10 a wood beam 11. Where the invention is used in a motor vehicle, the bar 9 forms a cross bar of the frame, and the wood beam 11 and the strap 10 act as a front bumper which takes the shocks due to collisions with vehicles or other obstacles in the operation of the truck. A fragment of the motor crank case 12 is shown housing the crank shaft 13 on the forward end of which is a clutch member 14, which coöperates with a clutch member on the rear end of a starting shaft.

The starting shaft is designated by the reference character 16 and is provided with a clutch member 15 which is arranged to cooperate with the clutch member 14 on the crank shaft previously referred to. The starting shaft is yieldingly held in inoperative position by a suitable spring 17 and this shaft is journaled in a suitable packed bearing 18 in the forward end of the crank case and in a bracket 19 bolted to the cross bar 9 and the beam 11. A transverse cylindrical key 20 passes through a suitable opening near the forward end of the starting shaft 16 and is secured thereto by a pin 21. The starting crank 22 is formed with a hollow cylindrical hub 23 which is adapted to laterally fit the forward end of the starting shaft and is provided with oppositely disposed longitudinal slots or key ways 24 in which the projecting ends of the key 20 are adapted to slide. The rear end of the hub 23 is somewhat cut away between the slots 24, thus leaving ears containing those slots, and with this construction it will be seen upon reference to Figs. 1 and 5 that the crank may be drawn forward relative to the shaft 16 from its position shown in Figs. 1 and 2 to the position shown in Fig. 3, and when in said latter position the crank may be turned bodily on the key 20 as a pivot into the position shown in Fig. 4, wherein the hub of the starting crank is at a right angle to the starting shaft. As the shaft 16 is wholly within the forward edge of the beam and its plate 10, the starting crank when folded to the position shown in Fig. 4 is also within the forward edge of said beam and may be then turned to the position shown in Fig. 5 in full lines, and secured against the beam by spring clip 25. For convenience in holding the starting crank closer to the beam, an opening 26 is made in the wood to house the handle 27 of the starting crank as shown in

Fig. 5. The construction of the spring clip 25 and the method of securing the handle in position underneath the beam is fully shown in the drawings and need not be further described.

It will be noted that a rearward force applied to the crank will lock the same against folding movement on the starting shaft while a forward movement will unlock the same, so that it can be moved to folded position. This is a convenient arrangement since a rearward movement is necessarily given to the crank and the starting shaft, so as to clutch the starting shaft with the crank shaft. Therefore by applying a rearward force to the crank, the crank is simultaneously locked on the starting shaft, and the starting shaft is thrown into engagement with the crank shaft.

It will thus be seen that this invention provides a very convenient starting crank which is accessible for operation and can at any time be moved to a position where it will be protected by the beam 11 against damage.

Although this invention is specially applicable to motor vehicles, it will be seen that it is not necessarily limited to such an application, but may be used wherever a starting crank is desirable. It is further obvious that various changes may be made in the details of construction without departing from this invention, and it is, therefore, to be understood that this invention is not to be limited to the specific construction shown and described.

Having thus described the invention, what is claimed is:

1. The combination with a hydrocarbon motor, of a normally-idle starting shaft therefor, and a folding starting crank secured to said shaft, and adapted to move about an axis at right angles to said shaft in moving to and away from folded position.

2. The combination with a hydrocarbon motor, of a normally-idle starting shaft therefor, and a folding starting crank pivoted to the end of said shaft and adapted to swing about an axis at right angles to the shaft to folded position.

3. The combination with a hydrocarbon motor, of a normally-idle starting shaft therefor, a starting crank having a hub, a sleeved connection between said shaft and hub, and means whereby said crank may be moved at right angles to said shaft to folded position.

4. The combination with a hydrocarbon motor, of a normally-idle starting shaft therefor, a starting crank having a hub with a sleeved end, a pin and slot connection between said shaft and hub, and means, connecting the crank and hub, permitting the crank to be moved about said pin to folded position.

5. The combination with a hydrocarbon motor, of a normally-idle starting shaft therefor, a folding crank secured to said shaft and slidable axially thereon, and means for locking said crank in operative position on said shaft when the crank is moved axially of the shaft.

6. The combination with a hydrocarbon motor, of a normally-idle starting shaft therefor, a folding crank secured to said shaft and slidable axially thereon, and means, for locking said crank in operative position on said shaft, adapted to be released by an axial movement of the crank on the shaft.

7. The combination with a hydrocarbon motor, of a starting shaft therefor, a folding starting crank, and a fixed pivot pin extending transversely of said shaft and forming a pivot for said crank.

8. The combination with a starting shaft, of a starting crank having a sleeve slidably engaging the end of said shaft and keyed to rotate therewith, means for limiting the sliding movement of said sleeve, and means permitting the folding of said sleeve and crank at right angles to the shaft when they reach the limit of their forward movement.

9. The combination with a starting shaft, of a starting crank having a sleeve slidably engaging the end of said shaft and keyed to rotate therewith, ears upon opposite sides of said sleeve projecting beyond the end thereof, and embracing said shaft, and pivotal connection between said ears and the end of said shaft whereby the crank may be folded when in its forward position.

10. The combination with a shaft, of a crank having a sleeve slidably engaging the end of said shaft, oppositely disposed ears upon said sleeve projecting beyond the end thereof, the said sleeve and ears being provided with longitudinal slots, and a cross pin in the end of said shaft working in said slots whereby the crank may be folded when in its forward position without being disconnected from said shaft.

11. The combination with a shaft, of a crank having a sleeve slidably engaging the end of said shaft and keyed to turn therewith, and means pivotally connecting said sleeve to the shaft when it reaches the outer limit of its sliding movement, the said sleeve having a cutaway portion at its end permitting it to fold at right angles to the shaft.

12. The combination with a starting shaft, of a starting crank therefor, a protective member, and means whereby said crank may be folded to a position within the margin of said member.

13. The combination with a starting shaft, of a starting crank therefor, a protective member, means whereby said crank may be folded to a position within the margin of said member, and means for securing the folded crank to said member.

14. The combination with a starting shaft, of a starting crank therefor having a handle, a protective member provided with a recess, and means whereby said crank may be folded to a position within the margin of said member with the handle in the recess.

15. The combination with the crank shaft of an automobile, of a longitudinally movable starting crank pivotally supported by the automobile and adapted to be swung around an axis at right angles to the crank shaft.

16. The combination with the crank shaft of an automobile, of a longitudinally movable starting crank pivotally supported by the automobile and adapted to be swung around an axis at right angles to the crank shaft to an inoperative position, and means for holding the crank in said position.

In testimony whereof I affix my signature in presence of two witnesses.

VINCENT LINK.

Witnesses:
AUSTIN L. RICHARDSON,
S. E. LYONS.

Copies of this patent may be obtained for five cents each, by addressing the "Commissioner of Patents, Washington, D. C."

D12186

DESIGN.

S. D. WALDON.

VEHICLE BODY.

APPLICATION FILED APR. 11, 1910.

41,544. Patented July 4, 1911.

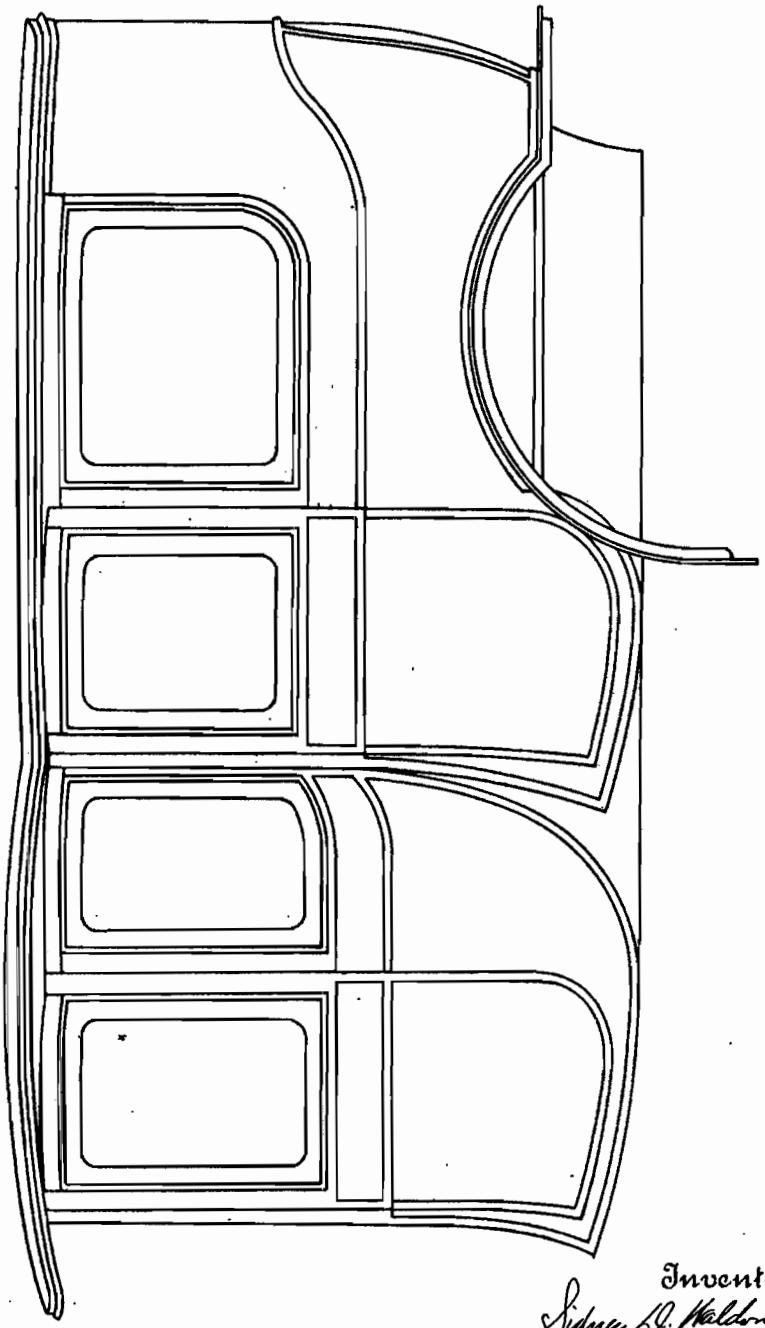

Witnesses
J. G. Stinkel
Milton Ottenberg.

Inventor
Sidney D. Waldon.
by Foster Freeman Watson & Coit
Attorneys

COLUMBIA PLANOGRAPH CO., WASHINGTON, D. C.

UNITED STATES PATENT OFFICE.

SIDNEY D. WALDON, OF DETROIT, MICHIGAN, ASSIGNOR TO PACKARD MOTOR CAR COMPANY, OF DETROIT, MICHIGAN, A CORPORATION OF MICHIGAN.

DESIGN FOR A VEHICLE-BODY.

41,544. Specification for Design. Patented July 4, 1911.

Application filed April 11, 1910. Serial No. 554,886. Term of patent 7 years.

To all whom it may concern:

Be it known that I, SIDNEY D. WALDON, a citizen of the United States, residing at Detroit, in the county of Wayne and State of Michigan, have invented a new, original, and ornamental Design for a Vehicle-Body, of which the following is a specification, reference being had to the accompanying drawing, forming a part thereof.

The figure is a side elevation of a vehicle body showing my new design.

I claim—

The ornamental design for a vehicle body as shown.

SIDNEY D. WALDON.

Witnesses:

G. L. LOOMIS,

N. V. LAMEY.

Copies of this patent may be obtained for five cents each, by addressing the "Commissioner of Patents, Washington, D. C."

A. LOOMIS.

MOTOR VEHICLE.

APPLICATION FILED MAY 23, 1910.

1,131,395.

Patented Mar. 9, 1915

2 SHEETS SHEET 1.

Fig. 1

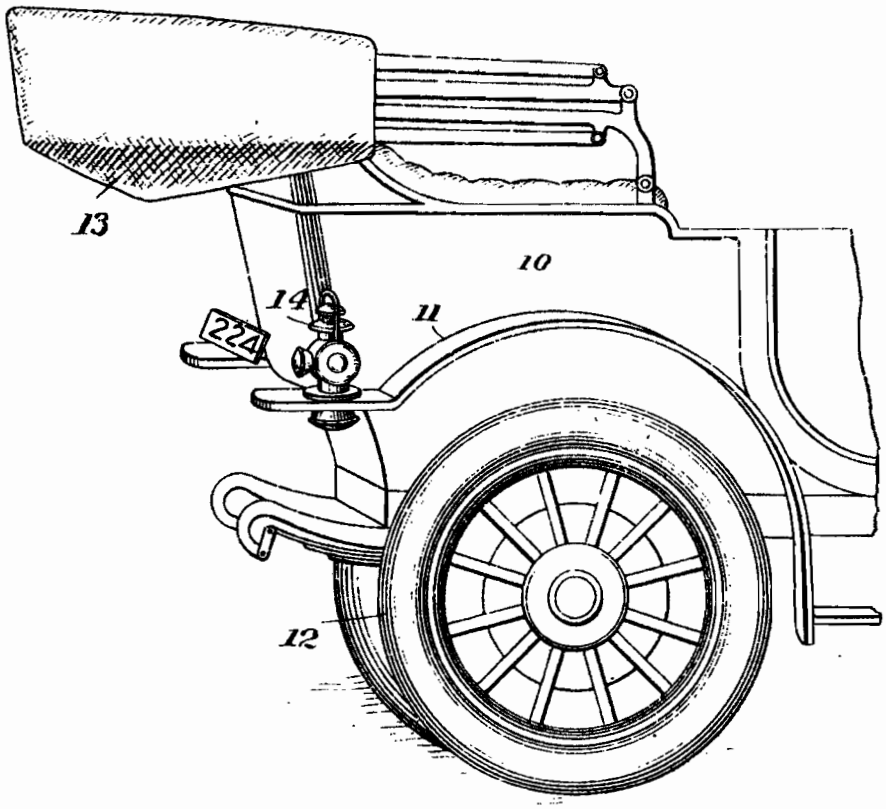

Witnesses

J. G. Hinkel

Cyril Brown.

Inventor

Allen Loomis.

by Foster Freeman Watson & Coit

Attorneys

A. LOOMIS.

MOTOR VEHICLE.

APPLICATION FILED MAY 23, 1910

1,131,395.

Patented Mar. 9, 1915

2 SHEETS—SHEET 2

Fig. 2.

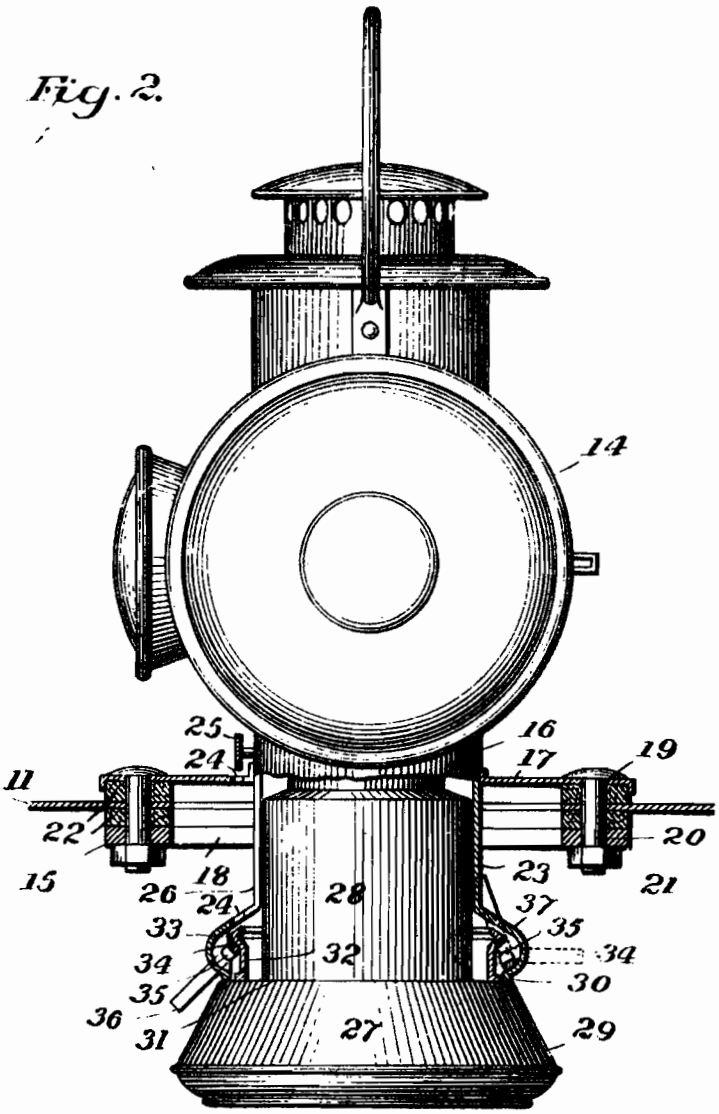

Witnesses

J. J. Stinkel

Cyril Brown.

Inventor

Allen Loomis

by Foster Freeman Watson & Coit

Attorneys

UNITED STATES PATENT OFFICE.

ALLEN LOOMIS, OF DETROIT, MICHIGAN, ASSIGNOR TO PACKARD MOTOR CAR COMPANY, OF DETROIT, MICHIGAN, A CORPORATION OF MICHIGAN.

MOTOR-VEHICLE.

1,131,395. Specification of Letters Patent. Patented Mar. 9, 1915.

Application filed May 23, 1910. Serial No. 563,029.

To all whom it may concern:

Be it known that I, ALLEN LOOMIS, a citizen of the United States, and resident of Detroit, county of Wayne, State of Michigan, have invented certain new and useful Improvements in Motor-Vehicles, of which the following is a specification.

This invention relates to motor vehicles and particularly to the lamps therefor and the means of attachment of the lamps to the vehicle.

The particular type of lamp in connection with which the invention is illustrated is the "tail lamp" which is usually suspended at the rear of the vehicle.

One of the objects of the invention is to construct a lamp and attaching means of simple and convenient form permitting the lamp to be securely attached to the body of the vehicle insuring it against excessive vibration and also permitting of the easy removal of the lamp from its support and of the fount from the lamp proper.

Another object of the invention is to so place the tail lamp on the vehicle rear fender, which fender is usually directly beneath a part of the vehicle top when the latter is in lowered position, that the main portion of the lamp, including the lenses, will be above the fender away from mud and dirt thrown up by the wheels and yet so that the lamp will be as low as possible on the vehicle to prevent the heat from the lamp scorching the top directly above it. This object is accomplished by extending the lower portion of the lamp through the fender and attaching the fount underneath the same.

Referring to the drawings, Figure 1 is a perspective view of a portion of a motor vehicle showing my invention incorporated therein; and Fig. 2 is an enlarged section through the tail lamp and the contiguous parts of the vehicle fender, some of the parts of the lamp being shown in elevation.

The vehicle body is shown at 10 and to this the rear fenders 11 are secured in suitable positions over the rear wheels 12. The top 13 is shown in lowered position with an envelop covering the same. It will be noticed that a portion of this top is directly above the tail lamp 14 which is mounted on one of the fenders 11, but since the lower portion of the lamp is dropped through the fender the lamp is thus placed so low that there is no danger of scorching the material of the top.

In Fig. 2 the fender is shown at 11 and it is in part supported by a bracket 15 which is properly secured to the body of the vehicle, and this bracket 15 is of perforated disk form, the opening therein being large enough to receive the lower portion of the lamp. The body portion 16 of the lamp has a radially extending flange 17 secured thereto by any suitable means such as soldering, and this flange is somewhat larger than the opening 18 formed in the disk portion of the bracket 15 and forms the support for the lamp proper. Suitable holes 19 are drilled in the flange 17 to register with similar holes in the fender 11 and bracket 15 and these parts are all secured together by bolts 20 and nuts 21 with suitable wood or cork washers 22 respectively between the flange 17 and the fender 11 and the fender and the bracket 15, as shown particularly in Fig. 2.

The downwardly extending portion 23 of the lamp body is somewhat flared near its lower edge and this flared portion is provided with a T-shaped slot 24 as is also the flange 17 to permit the passage therethrough of the wick-turning spindle 25, and a vertical slot 26 is provided in the body portion for the same purpose. The fount 27 comprises an upper portion 28 which extends within and is surrounded by the body portion 23, and a lower enlarged portion 29 which may abut against the lower edge 30 of the body portion 23.

Secured to the shoulder 31 formed between the upper and lower portions of the fount is a ring 32 having an outwardly flared part forming a shoulder 33 against which the eccentric portions 34 of a pair of clamps 35 are adapted to rest when in the clamped position shown at the left in Fig. 2. The clamp is shown in inoperative position at the right in Fig. 2 and it may be moved from one position to the other by the handle 36. This clamping means alone is of well known construction. It will be understood that the clamping pieces 35 are journaled in the enlarged portions 37 of the lower flared part of the body portion 23 of the lamp. Thus the fount is detachably connected with the lower portion 23 of the lamp body without any rotative movement of the

fount relative to the body as is required with a bayonet joint lock and similar constructions.

What I claim and desire to secure by Letters Patent is:

The combination with a support having an opening therethrough, of a lamp having a body portion adapted to extend through the opening and having a flange on the body portion larger than the opening and adapted to be secured to the support, said flange being arranged on the body portion above the bottom thereof, a fount extending into the body portion and removable from below said support, means below the support for detachably securing the fount to the body portion, and an adjusting device for the lamp above said flange.

In testimony whereof I affix my signature in presence of two witnesses.

ALLEN LOOMIS.

Witnesses:
R. H. ALLEN,
A. H. KNIGHT.

A. H. KNIGHT.

MOTOR VEHICLE.

APPLICATION FILED JULY 22, 1910.

1,052,485. Patented Feb. 11, 1913.

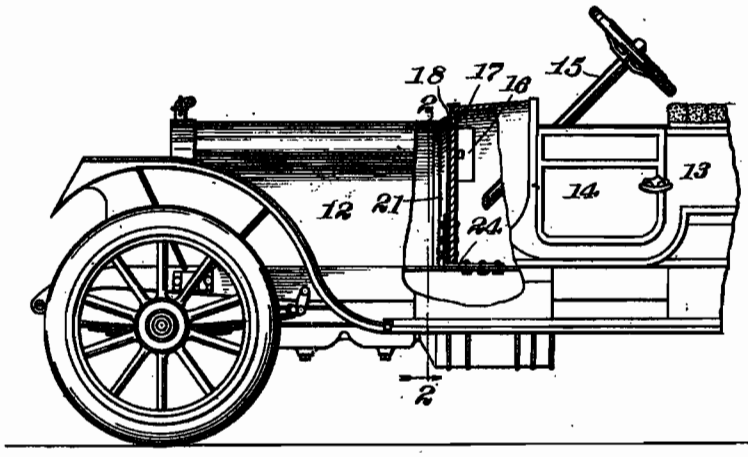

Fig. 1.

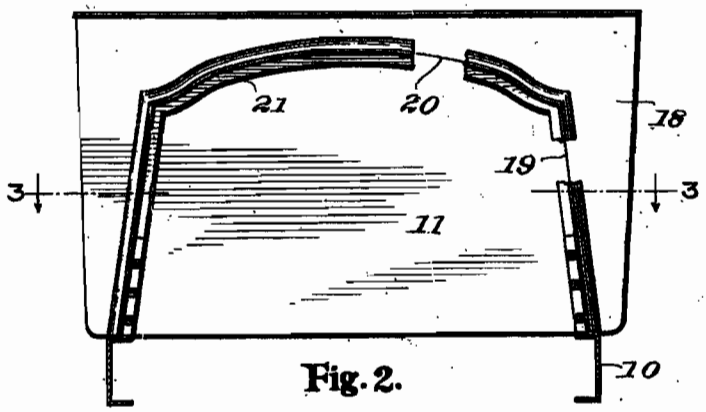

Fig. 2.

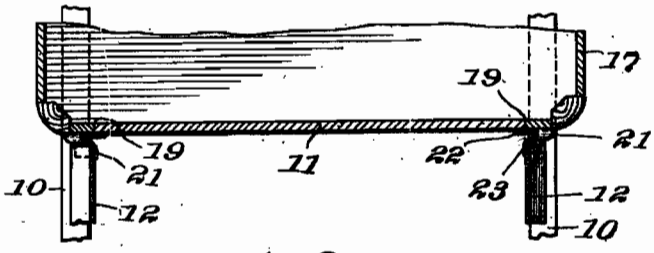

Fig. 3.

Inventor
Alfred H. Knight

Witnesses
J. H. Bruninga.
C. S. Brown.

By Foster Freeman Watson & Coit
Attorneys

UNITED STATES PATENT OFFICE.

ALFRED H. KNIGHT, OF DETROIT, MICHIGAN, ASSIGNOR TO PACKARD MOTOR CAR COMPANY, OF DETROIT, MICHIGAN, A CORPORATION OF MICHIGAN.

MOTOR-VEHICLE.

1,052,485. Specification of Letters Patent. Patented Feb. 11, 1913.

Application filed July 22, 1910. Serial No. 573,343.

To all whom it may concern:

Be it known that I, ALFRED H. KNIGHT, a citizen of the United States, and resident of Detroit, county of Wayne, State of Michigan, have invented certain new and useful Improvements in Motor-Vehicles, of which the following is a specification.

This invention relates to motor vehicles and particularly to the chassis and body construction, and more particularly to that type in which the body is detachable from the chassis.

In detachable body construction as now used, the sill of the body extends forwardly to a point adjacent the dash, so that the front of the sill abuts against the dash. While this is satisfactory in those constructions in which the body between the front seat and dash is open, it is not satisfactory where bodies are housed in and provided with doors between the front seat and the dash, for in such a case it is necessary to provide a joint between the dash and the body.

One of the objects of this invention therefore is to construct a detachable body so that a joint is provided between the dash and the forward part of the body, and to conceal this joint so that it is not exposed.

Further objects will appear from the detail description, taken in connection with the accompanying drawings, in which—

Figure 1 is a side elevation and part section, showing a part of a motor vehicle embodying this invention; Fig. 2 is a section on the line 2—2, Fig. 1, looking rearwardly, the bonnet being removed; and Fig. 3 is a section on the line 3—3, Fig. 2, looking in the direction of the arrow, Fig. 2.

Referring to the drawings, the side bars of the frame or chassis are indicated by the reference character 10, 11 designates the dash, 12 the motor bonnet or hood, 13 the body which extends forwardly of the front seat and is provided with a swinging fore door 14, between the dash and the front seat, 15 the steering post, and 16 the coil box mounted upon the dash. The dash is cut down to conform to the shape of the bonnet, and the forward portion 17 of the body, which is provided with the front portion 18, is cut to conform to the dash so as to extend around and over its side and top edges and make joints 19, 20 therewith. A molding 21 preferably of sheet metal is mounted at the forward side of the dash and is provided with a flange portion 22, which extends over and around and conceals the joint 19, and with a forwardly projecting portion 23 which forms a ledge or support for the bonnet. This molding is secured in position by means of bolts passing through upper limbs of brackets 24 secured to the side members 10. The bolts pass through the brackets, the molding, and the dash, so as to securely clamp the molding between the brackets and dash, and to the dash, and so as to clamp both the molding and dash to the chassis.

It will thus be seen that this invention provides a very strong and neat construction. The outline of the dash conforms to the bonnet, and the molding 21 conceals the joint between the dash and body. This molding also forms a ledge or support for the bonnet.

It is obvious that various changes may be made in the details of construction, without departing from this invention, and it is, therefore, to be understood that this invention is not to be limited to the specific construction shown and described.

Having thus described the invention, what is claimed is:

1. In a motor vehicle, the combination with a chassis including a frame, a dash secured on the frame, and a motor bonnet, of a detachable body for the chassis including a forward portion making a joint with the dash, and a molding or ledge covering said joint and forming a support for said bonnet.

2. In a motor vehicle, the combination with a chassis including a frame, a dash and a motor bonnet, of a detachable body having a forward portion extending along the top and side edges of the dash and making a joint therewith, and a molding covering said joint and forming a ledge or support for the bonnet.

3. In a motor vehicle, the combination with a frame and a dash secured thereto, of a bonnet ledge conforming to the outlines of the dash and secured thereto so that it projects beyond the edges of the dash, and a detachable body having a forward portion making a joint with the edges of the dash, whereby the bonnet ledge covers the joint.

4. In a motor vehicle, the combination with the side members of the chassis frame and the motor bonnet, of brackets secured to said side members, a dash secured to said brack-

ets, a ledge for the motor bonnet arranged on the front of the dash and projecting beyond the top and sides of the dash, and a detachable body having a forward portion making a joint with the sides and top of the dash, and said bonnet ledge covering and concealing said joint.

5. In a motor vehicle, the combination with a chassis including a frame, a dash, and a motor bonnet conforming to the outlines of the dash, of a detachable body having a forward portion extending along the edges of the dash, and a molding conforming to the bonnet lines connected to the dash but not connected to the body and arranged to conceal the joint between the dash and body.

6. In a motor vehicle, the combination with a chassis including a frame, a dash, and a motor bonnet conforming to the outlines of the dash, of a detachable body having a forward portion extending along the edges of the dash, and a molding connected to the dash but not connected to the body and conforming to the lines of the dash, the bonnet and the body.

In testimony whereof I affix my signature in presence of two witnesses.

ALFRED H. KNIGHT.

Witnesses:
W. H. FINCKEL, Jr.,
C. I. DALE.

Copies of this patent may be obtained for five cents each, by addressing the "Commissioner of Patents, Washington, D. C."

W. L. GLEASON & E. F. ROBERTS.

PACKING RING IMPLEMENT.

APPLICATION FILED JULY 30, 1910

1,099,355. Patented June 9, 1914.

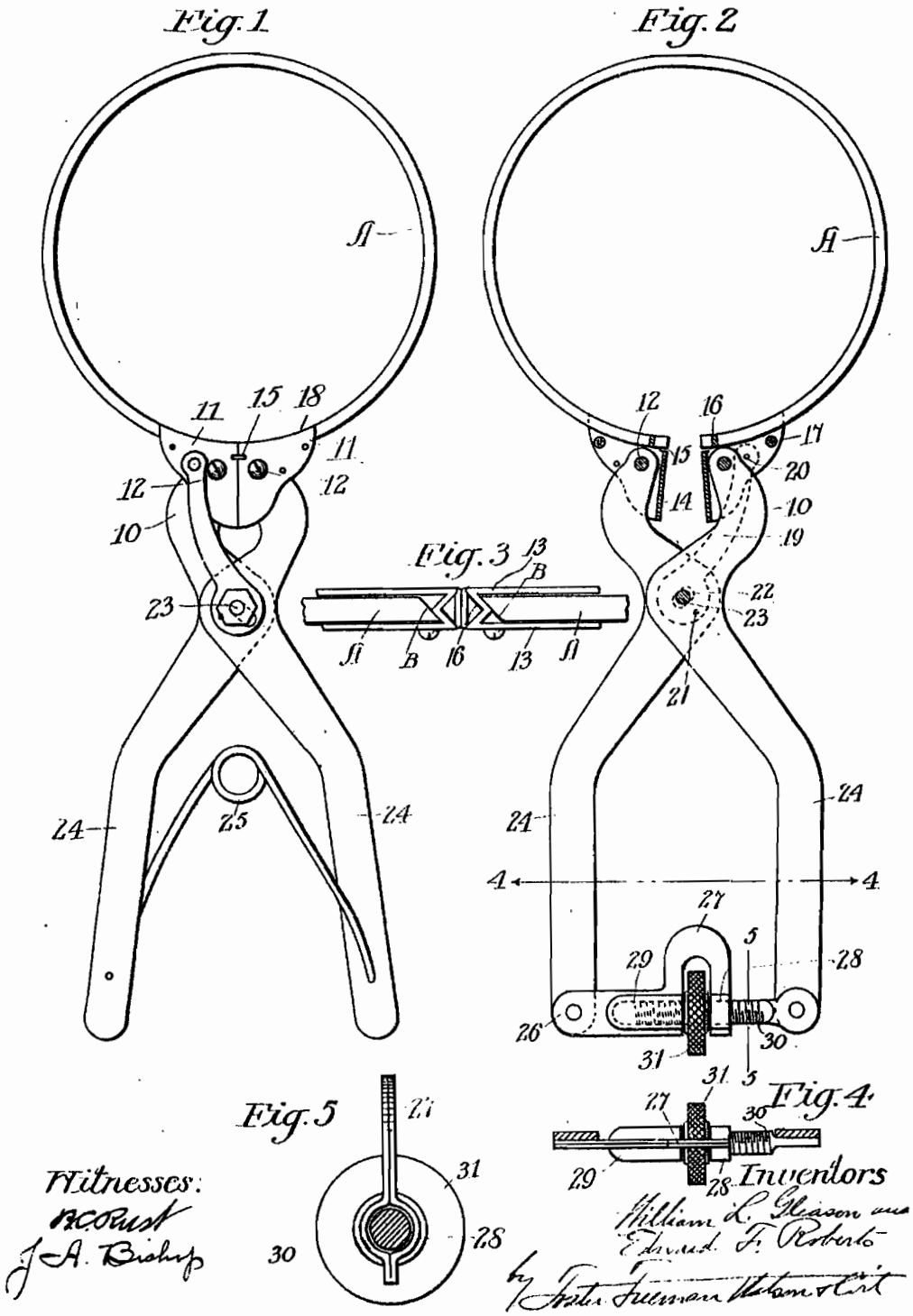

Witnesses:
R. C. Rust
J. A. Bishop

Inventors
William L. Gleason and
Edward F. Roberts
by Foster Freeman Watson & Coit

DESIGN.

S. D. WALDON.

VEHICLE BODY.

APPLICATION FILED APR. 12, 1910.

41,545. Patented July 4, 1911.

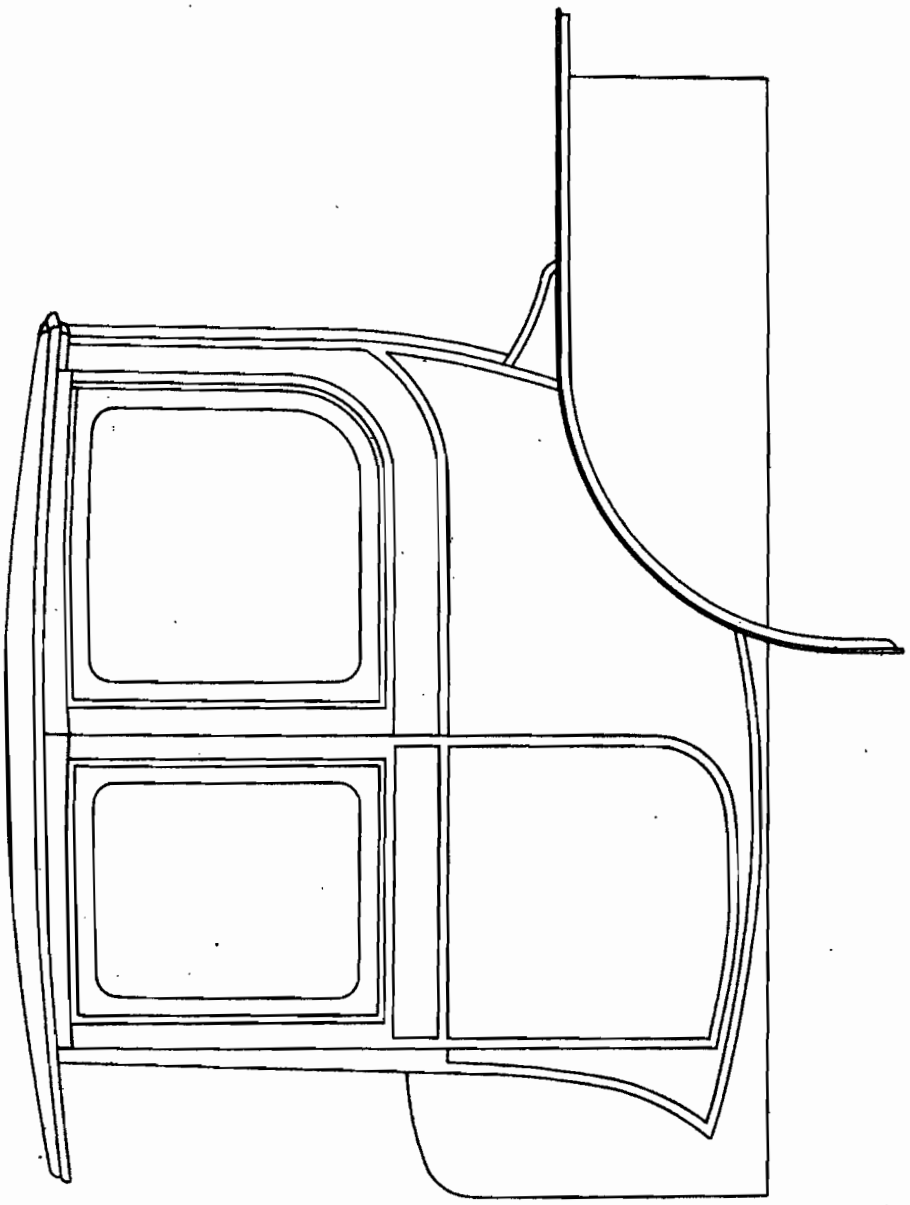

Witnesses

J. G. Stinkel

Milton Ottenberg.

Inventor

Sidney D. Waldon

by Foster Freeman Watson & Coit

Attorneys

COLUMBIA PLANOGRAPH CO., WASHINGTON, D. C.

UNITED STATES PATENT OFFICE.

SIDNEY D. WALDON, OF DETROIT, MICHIGAN, ASSIGNOR TO PACKARD MOTOR CAR COMPANY, OF DETROIT, MICHIGAN, A CORPORATION OF MICHIGAN.

DESIGN FOR A VEHICLE-BODY.

41,545. Specification for Design. Patented July 4, 1911.

Application filed April 12, 1910. Serial No. 555,113. Term of patent 7 years.

To all whom it may concern:

Be it known that I, SIDNEY D. WALDON, a citizen of the United States, residing at Detroit, in the county of Wayne and State of Michigan, have invented a new, original, and ornamental Design for a Vehicle-Body, of which the following is a specification, reference being had to the accompanying drawing, forming a part thereof.

The figure is a side elevation of a vehicle body showing my new design.

I claim—

The ornamental design for a vehicle body as shown.

SIDNEY D. WALDON.

Witnesses:

G. L. LOOMIS,

N. V. LAMEY.

Copies of this patent may be obtained for five cents each, by addressing the "Commissioner of Patents, Washington, D. C."

A. H. KNIGHT.

MOTOR VEHICLE.

APPLICATION FILED JULY 22, 1910.

1,052,485. Patented Feb. 11, 1913.

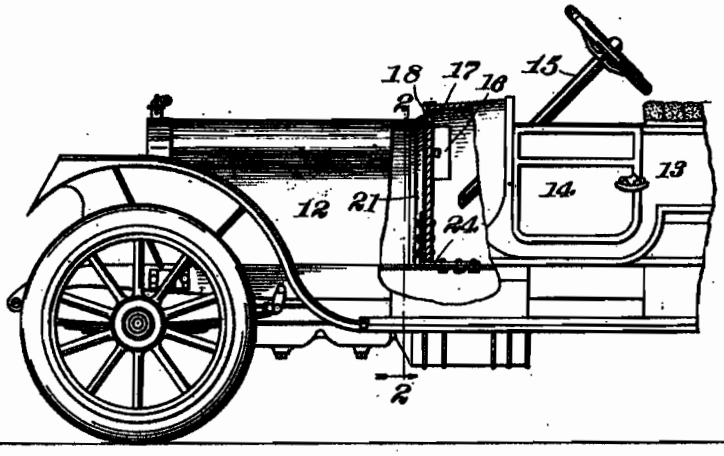

Fig. 1.

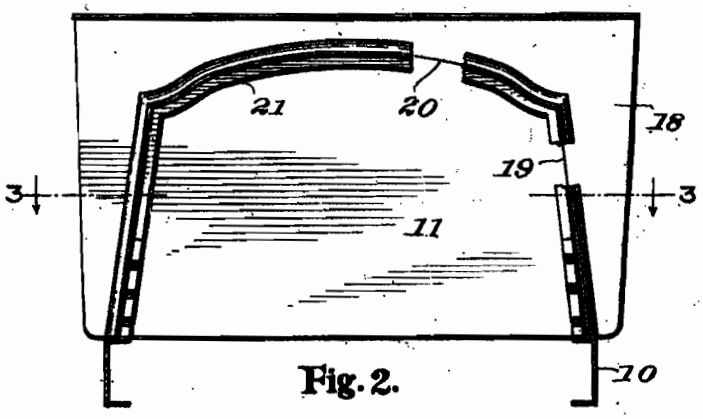

Fig. 2.

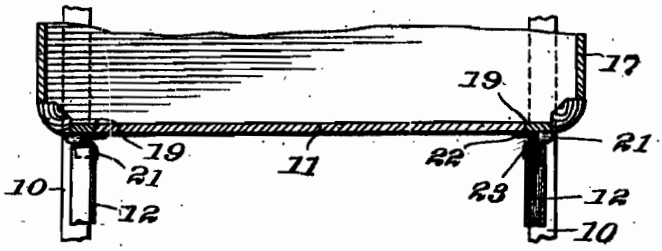

Fig. 3.

Inventor
Alfred H. Knight

Witnesses
J. H. Bruninga.
C. S. Brown.

By Foster Freeman Watson & Coe

Attorneys

UNITED STATES PATENT OFFICE.

ALFRED H. KNIGHT, OF DETROIT, MICHIGAN, ASSIGNOR TO PACKARD MOTOR CAR COMPANY, OF DETROIT, MICHIGAN, A CORPORATION OF MICHIGAN.

MOTOR-VEHICLE.

1,052,485. Specification of Letters Patent. Patented Feb. 11, 1913.

Application filed July 22, 1910. Serial No. 573,343.

To all whom it may concern:

Be it known that I, ALFRED H. KNIGHT, a citizen of the United States, and resident of Detroit, county of Wayne, State of Michigan, have invented certain new and useful Improvements in Motor-Vehicles, of which the following is a specification.

This invention relates to motor vehicles and particularly to the chassis and body construction, and more particularly to that type in which the body is detachable from the chassis.

In detachable body construction as now used, the sill of the body extends forwardly to a point adjacent the dash, so that the front of the sill abuts against the dash. While this is satisfactory in those constructions in which the body between the front seat and dash is open, it is not satisfactory where bodies are housed in and provided with doors between the front seat and the dash, for in such a case it is necessary to provide a joint between the dash and the body.

One of the objects of this invention therefore is to construct a detachable body so that a joint is provided between the dash and the forward part of the body, and to conceal this joint so that it is not exposed.

Further objects will appear from the detail description, taken in connection with the accompanying drawings, in which—

Figure 1 is a side elevation and part section, showing a part of a motor vehicle embodying this invention; Fig. 2 is a section on the line 2—2, Fig. 1, looking rearwardly, the bonnet being removed; and Fig. 3 is a section on the line 3—3, Fig. 2, looking in the direction of the arrow, Fig. 2.

Referring to the drawings, the side bars of the frame or chassis are indicated by the reference character 10, 11 designates the dash, 12 the motor bonnet or hood, 13 the body which extends forwardly of the front seat and is provided with a swinging fore door 14, between the dash and the front seat, 15 the steering post, and 16 the coil box mounted upon the dash. The dash is cut down to conform to the shape of the bonnet, and the forward portion 17 of the body, which is provided with the front portion 18, is cut to conform to the dash so as to extend around and over its side and top edges and make joints 19, 20 therewith. A molding 21 preferably of sheet metal is mounted at the forward side of the dash and is provided with a flange portion 22, which extends over and around and conceals the joint 19, and with a forwardly projecting portion 23 which forms a ledge or support for the bonnet. This molding is secured in position by means of bolts passing through upper limbs of brackets 24 secured to the side members 10. The bolts pass through the brackets, the molding, and the dash, so as to securely clamp the molding between the brackets and dash, and to the dash, and so as to clamp both the molding and dash to the chassis.

It will thus be seen that this invention provides a very strong and neat construction. The outline of the dash conforms to the bonnet, and the molding 21 conceals the joint between the dash and body. This molding also forms a ledge or support for the bonnet.

It is obvious that various changes may be made in the details of construction, without departing from this invention, and it is, therefore, to be understood that this invention is not to be limited to the specific construction shown and described.

Having thus described the invention, what is claimed is:

1. In a motor vehicle, the combination with a chassis including a frame, a dash secured on the frame, and a motor bonnet, of a detachable body for the chassis including a forward portion making a joint with the dash, and a molding or ledge covering said joint and forming a support for said bonnet.

2. In a motor vehicle, the combination with a chassis including a frame, a dash and a motor bonnet, of a detachable body having a forward portion extending along the top and side edges of the dash and making a joint therewith, and a molding covering said joint and forming a ledge or support for the bonnet.

3. In a motor vehicle, the combination with a frame and a dash secured thereto, of a bonnet ledge conforming to the outlines of the dash and secured thereto so that it projects beyond the edges of the dash, and a detachable body having a forward portion making a joint with the edges of the dash, whereby the bonnet ledge covers the joint.

4. In a motor vehicle, the combination with the side members of the chassis frame and the motor bonnet, of brackets secured to said side members, a dash secured to said brack-

ets, a ledge for the motor bonnet arranged on the front of the dash and projecting beyond the top and sides of the dash, and a detachable body having a forward portion making a joint with the sides and top of the dash, and said bonnet ledge covering and concealing said joint.

5. In a motor vehicle, the combination with a chassis including a frame, a dash, and a motor bonnet conforming to the outlines of the dash, of a detachable body having a forward portion extending along the edges of the dash, and a molding conforming to the bonnet lines connected to the dash but not connected to the body and arranged to conceal the joint between the dash and body.

6. In a motor vehicle, the combination with a chassis including a frame, a dash, and a motor bonnet conforming to the outlines of the dash, of a detachable body having a forward portion extending along the edges of the dash, and a molding connected to the dash but not connected to the body and conforming to the lines of the dash, the bonnet and the body.

In testimony whereof I affix my signature in presence of two witnesses.

ALFRED H. KNIGHT.

Witnesses:
W. H. FINCKEL, Jr.,
C. I. DALE.

Copies of this patent may be obtained for five cents each, by addressing the "Commissioner of Patents, Washington, D. C."

UNITED STATES PATENT OFFICE.

WILLIAM L. GLEASON AND EDWARD F. ROBERTS, OF DETROIT, MICHIGAN, ASSIGNORS TO PACKARD MOTOR CAR COMPANY, OF DETROIT, MICHIGAN, A CORPORATION OF MICHIGAN.

PACKING-RING IMPLEMENT.

1,099,355. Specification of Letters Patent. Patented June 9, 1914.

Application filed July 30, 1910. Serial No. 574,747.

To all whom it may concern:

Be it known that we, WILLIAM L. GLEASON and EDWARD F. ROBERTS, citizens of the United States, and residents of Detroit, Wayne county, State of Michigan, have invented certain new and useful Improvements in Packing-Ring Implements, of which the following is a specification.

This invention relates to an implement which is adapted to be utilized for removing and replacing packing rings.

In the construction of packing ring joints, more especially in the piston rings for the pistons of engines, the support for the packing ring or the piston is provided with grooves for the reception of the rings. The rings are elastic and are constructed and proportioned so as to spring outwardly against the cylinder walls. The grooves are however of such a depth that the ring, which is split, must be sprung outwardly in order to be placed in position. It is very difficult to remove such a ring and to replace it, especially since the ends are cut diagonally or on a bevel, thereby rendering their engagement by a tool exceedingly difficult.

One of the objects of this invention is to construct an implement by means of which a packing ring can be sprung apart, and thus easily removed or replaced.

Another object is to construct the jaws of such an implement so that they will support the ring as well as spread it, whereby the ring may be handled with and supported by the tool entirely.

Further objects will appear from the detail description, taken in connection with the accompanying drawings, in which—

Figure 1 is an elevation of one form of implement shown in engagement with a packing ring, the ring being in collapsed position; Fig. 2 is a similar view showing a slightly modified form of implement, the implement jaws being shown in section, and the ends of the packing ring being sprung apart; Fig. 3 is a plan view of the jaws of the implement shown in Figs. 1 and 2, the ends of the packing ring being shown in position in the jaws; Fig. 4 is a section along the line 4—4, Fig. 2; and Fig. 5 is a section along the line 5—5, Fig. 2.

The packing ring A is of the usual form and is split so as to form diagonal or beveled ends B.

The implement comprises a pair of pivotally connected members 10 provided with a pair of jaws 11, pivotally connected to the members 10 by means of pivot pins 12. The jaws 11 are preferably formed of sheet metal bent to form side walls 13 and an end wall 14. The jaws are slotted as shown at 15, and the walls 14 above these slots are stamped inwardly so as to form V-shaped portions 16. Pins 17 connect the side walls 13 and form stops which engage the piston ring as shown in Fig. 2, and the jaws are curved as shown at 18, so as to conform to the contour of the ring. A pair of links 19 are pivotally connected to the jaws at 20 and to the members 10 at 21. The lower ends of the links are provided with slots 22 for the pivot pin or bolt 23 which pivotally connects the members 10.

In the construction shown in Fig. 1, the members 10 are provided with arms 24 forming handles and the spring 25 is interposed between these handles so as to normally close the jaws 11.

The link connection between the jaws 11 and their supporting members 10 causes these jaws to remain substantially in parallel relation throughout the extent of their normal movement. The channeled construction of the jaws permits them to receive the ends of the rings, and the V construction 16 conforms to the beveled ends of the ring so that the implement will not only firmly engage the ends of the ring but will also support the same.

The operation in applying and removing a ring will be obvious from the drawing. The jaws of the implement are arranged to engage the ring as shown, and the ring can then be expanded so that it can be easily slipped over the piston and allowed to contract in its groove. Similarly the ring can be expanded so as to remove the same. The curved construction of the jaws permits them to clear the support for the ring when the ring is to be placed in position, and the provision of the spring 25 permits the tool to be handled with one hand. The jaws will engage the ring so as not only to expand it but the frictional engagement is suffi-

cient to permit this ring to be supported by and handled with the implement entirely. The recessed and parallel arranged construction of the jaws insures a firm engagement between the jaws and the ring. The rings can thus be easily slipped into and out of position.

In the construction shown in Figs. 2, 4 and 5, means are provided for spreading apart the jaws and for holding them in any desired position. This means comprises a link 26 pivotally connected to one of the arms 24 and provided with suitable adjusting mechanism engaging coöperating adjusting mechanism on the opposite arm. The link 26 is preferably formed of a single piece of sheet metal bent double and forming a yoke 27. The material is stamped out so as to form recessed portions or bearings 28 and 29 for the reception of a threaded link 30 pivotally connected to the other arm 24. An adjusting nut 31 is mounted on the threaded link 30 in the yoke 27. By means of this construction, the jaws of the implement can be spread apart and locked in adjusted position. It will thus be seen that a simple and cheap adjusting means is provided for adjusting and locking the jaws so that the removal and replacement of the packing ring can be easily accomplished.

It is obvious that various changes may be made in the details of construction without departing from this invention, and it is, therefore, to be understood that this invention is not to be limited to the specific construction shown and described.

Having thus described the invention, what is claimed is:

1. In a packing ring implement, the combination with a pair of jaws, of means on said jaws having channels the walls of which are adapted to simultaneously engage the sides and ends of a packing ring, and means for operating said jaws.

2. In a packing ring implement, the combination with a pair of jaws, said jaws having beveled surfaces adapted to engage the ends of a packing ring and to support them laterally, and means for operating said jaws.

3. In a packing ring implement, the combination with a pair of movable members, of jaws on said members comprising side members constructed to embrace the ends of a packing ring.

4. In a packing ring implement, the combination with a pair of movable members, of jaws on said members comprising plates bent to form channel like members.

5. In a packing ring implement, the combination with a pair of movable members, of jaws on said members comprising plates bent to form channel like members, one of the walls of each of said jaws being pressed in to a V-form.

6. In a packing ring implement, the combination with a pair of jaws, said jaws being provided with recesses to receive the ends of a packing ring, the ends of the recesses being constructed to conform to the beveled ends of the packing ring, and means for operating said jaws.

7. In a packing ring implement, the combination with a pair of movable members, of a jaw on one of said members constructed to form side and end walls, and a stop pin connecting said side walls.

8. In a packing ring implement, the combination with a pair of movable members, of a jaw pivotally mounted on one of said members, said jaw being constructed to form a channel for receiving the end of a packing ring.

9. In a packing ring implement, the combination with a pair of pivotally connected members, of jaws pivoted on said members and constructed to engage the ends of a packing ring, and links eccentrically connected with said members and jaws.

10. In an implement of the class described, the combination with a pair of movable members, of adjusting means therefor including a link stamped to form a yoke, an adjusting nut in said yoke, and a screw engaging said nut.

11. In an implement of the class described, the combination with a pair of movable members, of adjusting means therefor including a member formed of sheet metal bent and stamped to form a yoke and recesses, an adjusting nut in said yoke, and a screw engaging said nut and located in said recesses.

12. In an implement of the class described, the combination with a pair of movable members, of adjusting means therefor including a member formed of sheet metal stamped and bent double to form a recess, and adjusting means engaging said recess.

13. In an implement of the class described, the combination with a pair of movable members, of adjusting means therefor including a member formed of sheet metal stamped and bent double to form a yoke and recesses, and adjusting means in said yoke and recesses.

In testimony whereof we affix our signatures in presence of two witnesses.

WILLIAM L. GLEASON.
EDWARD F. ROBERTS.

Witnesses:
W. H. WORKMAN,
F. A. TUCKER.

M. TIBBETTS.

HYDROCARBON ENGINE.

APPLICATION FILED AUG. 1, 1910.

1,197,566.

Patented Sept. 5, 1916.

3 SHEETS—SHEET 1.

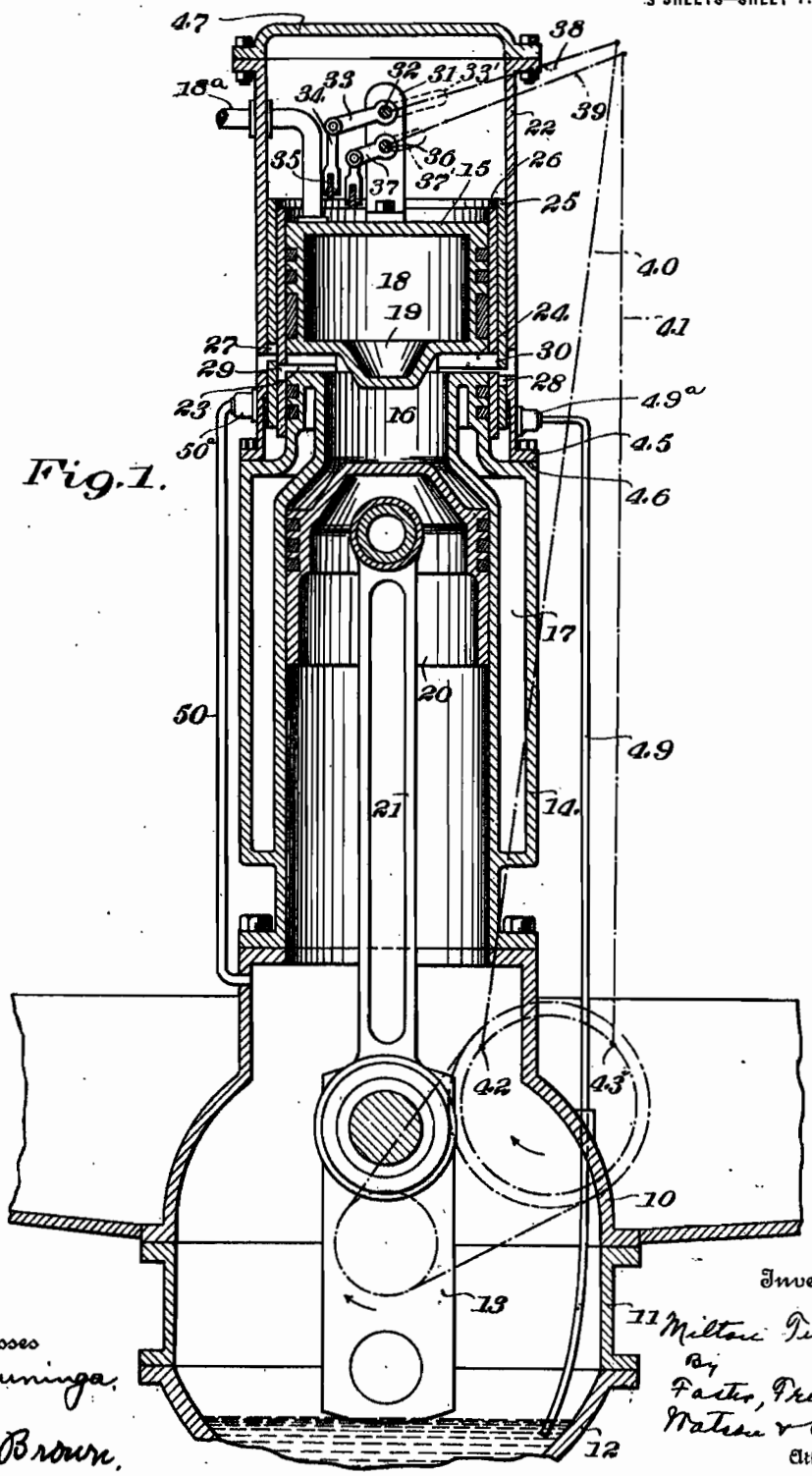

Fig. 1.

Witnesses
J. H. Bruninga.
C. S. Brown.

Inventor
Milton Tibbetts
By
Foster, Freeman
Watson & Coit
Attorneys

M. TIBBETTS.

HYDROCARBON ENGINE.

APPLICATION FILED AUG. 1, 1910.

1,197,566.

Patented Sept. 5, 1916.

3 SHEETS—SHEET 2.

Fig. 2.

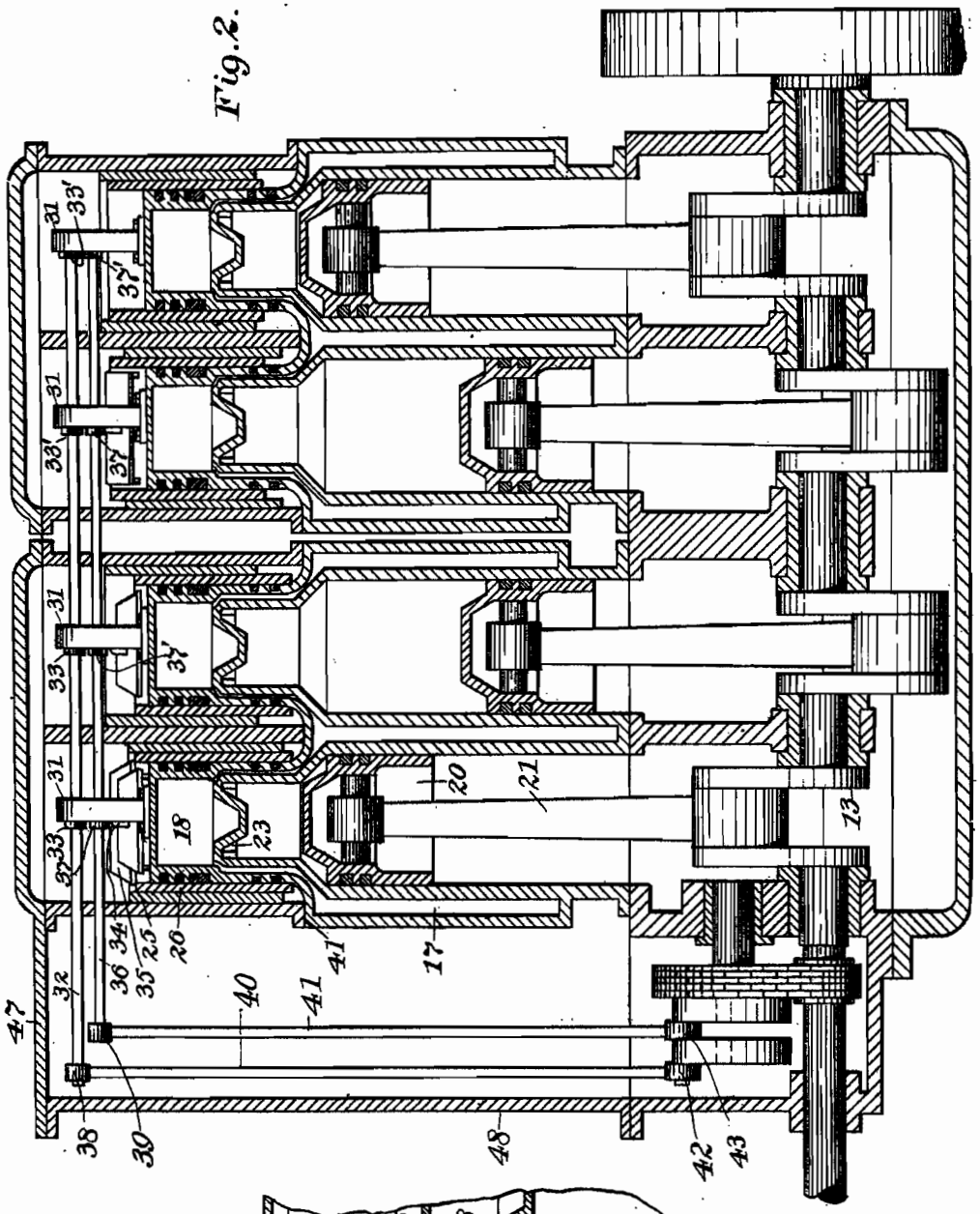

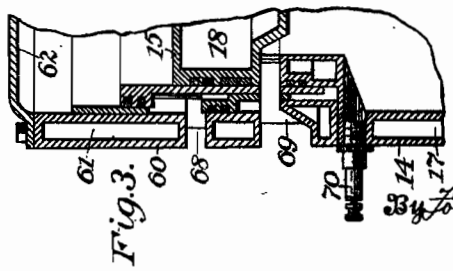

Fig. 3.

Witnesses

J. N. Bruninga.

C. S. Brown.

Inventor

Milton Tibbetts

By Foster Freeman Watson & Coit

Attorneys

M. TIBBETTS.

HYDROCARBON ENGINE.

APPLICATION FILED AUG. 1, 1910.

1,197,566.

Patented Sept. 5, 1916.

3 SHEETS—SHEET 3.

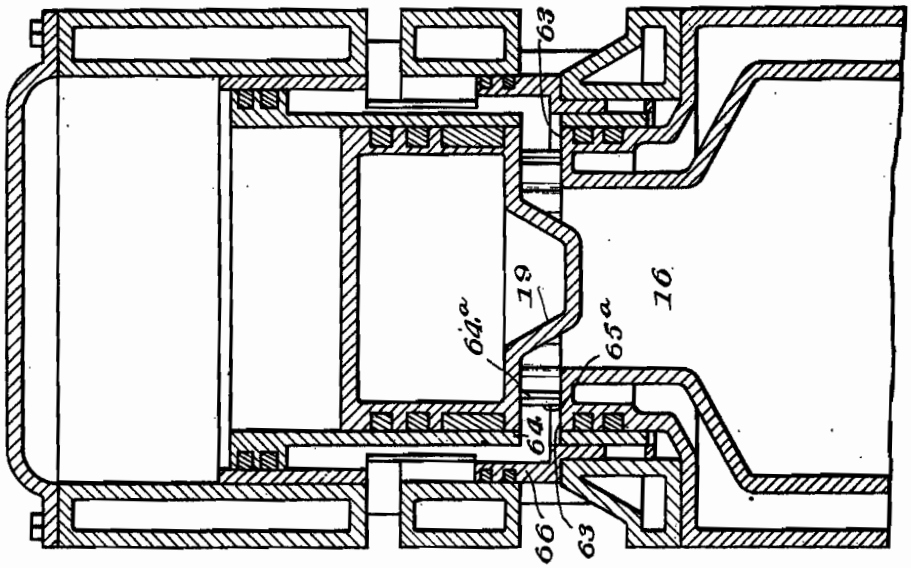

Fig. 5.

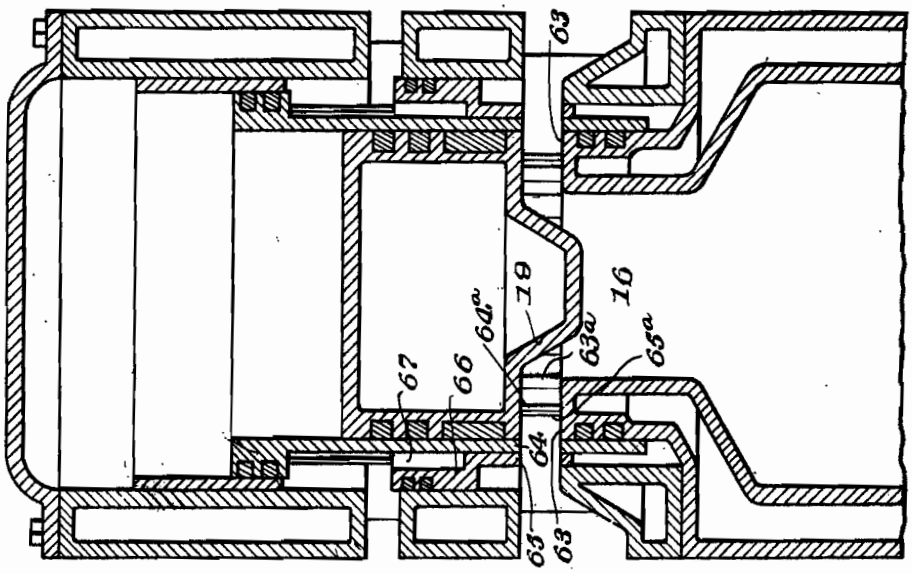

Fig. 4.

Inventor

Milton Tibbetts

Witnesses

J. H. Bruninga.

C. S. Brown

By Foster, Freeman, Watson & Coit

Attorney

UNITED STATES PATENT OFFICE.

MILTON TIBBETTS, OF DETROIT, MICHIGAN, ASSIGNOR TO PACKARD MOTOR CAR COMPANY, OF DETROIT, MICHIGAN, A CORPORATION OF MICHIGAN.

HYDROCARBON-ENGINE.

1,197,566. Specification of Letters Patent. Patented Sept. 5, 1916.

Application filed August 1, 1910. Serial No. 574,985.

To all whom it may concern:

Be it known that I, MILTON TIBBETTS, a citizen of the United States, and resident of Detroit, Wayne county, State of Michigan, have invented certain new and useful Improvements in Hydrocarbon-Engines, of which the following is a specification.

This invention relates to hydrocarbon motors and particularly to the type employing sleeve valves to control the operation thereof.

In the present constructions of sleeve valve motors, the valves are mounted between the piston and the cylinder walls, and therefore are subject to hot gases and have not been effectively cooled and lubricated.

One of the objects of this invention is to locate the sleeves away from the combustion chamber, so that they are not subject to the direct action of the hot gases and may be effectively cooled and lubricated.

It is usual to operate valves of this type by eccentrics located in the crank case and connected to the valve sleeves by connecting rods. It has also been proposed to operate the valves by an eccentric shaft on top of the cylinder. This latter method of operation is objectionable due to the noise and wear of the gears, at least two pairs of bevel gears being required in order to transmit the motion from the crank shaft to the shaft on top of the engine.

Another object of this invention therefore is to provide an operating mechanism for the valves which will not be open to the above objections.

Further objects will appear from the detail description, taken in connection with the accompanying drawings, in which—

Figure 1 is a vertical section through one of the cylinders of a motor embodying this invention; Fig. 2 is a vertical longitudinal section showing a multi-cylinder motor; Fig. 3 is a section of a part of one of the cylinders of the motor, embodying another form of valve mechanism; and Figs. 4 and 5 are additional views illustrating the form shown in Fig. 3.

In Figs. 1 and 2, the invention is shown as applied to a four-cylinder motor. In this type of motor, the cylinders are usually cast in pairs and bolted on a single crank case, in which operates the crank shaft. The crank case is composed of an upper section 10, an intermediate section 11, and a lower section 12, which latter section forms the oil well in which the cranks of the crank shaft 13 dip for the purpose of lubricating the motor according to the splash lubricating system. One of the cylinders is indicated in Fig. 1 by the reference character 14, and is provided with an extension 15 which is preferably contracted so as to be of smaller diameter than the rest of the cylinder, and which forms a combustion chamber 16 of smaller diameter than the cylinder proper. The cylinder wall is water jacketed as shown at 17 and communicates with the water jacket 18 in the head or contracted portion 15, the water jacket or water space 18 being separated from the combustion chamber by a partition 19. The water is discharged from the cylinder by means of a pipe 18a. A piston 20 reciprocates in the cylinder and is connected to the crank shaft by means of a connecting rod 21. A casing 22 surrounds the contracted portion 15 and forms therewith an annular valve chamber. Inlet and exhaust ports 23, 24 respectively, extend through the walls of the cylinder directly below the partition 19 as shown, and these ports are controlled by a pair of valve sleeves 25 and 26, which slide on the contracted portion 15 of the cylinder and connect the cylinder ports with the inlet and exhaust manifolds. The outer valve sleeve 25 is provided with inlet and exhaust ports 27 and 28 respectively, and the inner sleeve with inlet and exhaust ports 29 and 30 respectively. The contracted portion of the cylinder is provided with piston rings so as to make a good gas tight joint between the valve sleeves and the cylinder. The cylinder heads have each mounted upon them a support 31 in which are mounted a pair of shafts 32 and 36 which extend across the upper ends of the cylinders as shown in Fig. 2. The shaft 32 has mounted upon it a pair of arms 33 which connect by links 34 with cross bars 35 connected to the outer sleeve of cylinder 1 and inner sleeve of cylinder 2, and a pair of arms 33′ which have a similar connection to inner sleeve of cylinder 3 and outer sleeve of cylinder 4. A pair of arms 37 on shaft 36 have a similar connection with the inner sleeve of cylinder 1 and outer sleeve of cylinder 3, and a pair of arms 37′ have a similar connection with the outer sleeve of cylinder 2 and the inner sleeve of cylinder 4. The rock shafts 31 and 32 have secured thereto a pair of arms 38 and 39 connected by links 40 and 41 with eccentrics 42 and 43. These eccentrics are

displaced 90° and are mounted upon an eccentric shaft which is driven from the crank shaft by a two-to-one chain gearing, so as to drive the eccentric shaft at half speed. This construction is shown in detail in Fig. 2, and diagrammatically in Fig. 1. The casing 22 is provided with a flange 45 which is bolted to a shoulder 46 on the cylinder, and is further provided with a cover plate 47. The arms 38, 39 and the connections to the eccentric shaft including the chain gearing, are preferably inclosed by a housing 48, which may be integral with one pair of cylinders and with the crank case. The annular valve chamber formed between the casing 22 and the extended part of the cylinder 15 is supplied with oil through the pumping action of the sleeves in connection with the inlet pipe 49 leading from the lower part of the crank case and having a check valve 49ª therein, and the outlet or overflow pipe 50 leading to the crank case and having a check valve 50ª which permits the oil to flow outwardly but not inwardly.

The operation of the valve sleeves will be obvious, the ports in these sleeves operating to control the motor on the four-stroke cycle, and in the order 1—2—4—3. The valve sleeves are located outside of the cylinder and out of direct contact with the hot gases in the cylinder and the combustion chamber, and a water jacket is interposed between the entire intervening space between the cylinder and the sleeves. This insures that the valve sleeves will be kept cool, preventing sticking due to expansion, etc. By contracting the head, the total diameter of the cylinder is not increased beyond the normal, and thus the cylinders can be placed close together which is desirable especially in motor vehicle practice.

In view of the fact that the eccentrics are placed 90° apart, it is possible to operate all the valves of a four cylinder motor with two rock shafts, and the practically direct connection between the eccentrics and the rock shaft by means of the links will obviate the noise and wear of the bevel gears present in the prior constructions.

In the operation of the motor, in view of the fact that the valve sleeves are less than 180° apart, the atmosphere in the annular valve chamber below the valves will be alternately rarefied and compressed. The sleeves will therefore operate as a pump to pump the oil from the crank case into the valve chamber. The pipe 50 acts as an overflow pipe.

Figs. 3, 4 and 5 show a construction in which the casing 22 itself is water jacketed, and in which a single port performs the functions of both inlet and exhaust ports so that the total port area can be a maximum. The casing surrounding the valve sleeves is here indicated by 60, and the water jacket by 61, which is in communication with the main water jacket 17 of the cylinder and in effect constitutes an extension thereof. The contracted upper or head portion 15 of the cylinder is of similar construction to that shown in Fig. 1, except that in this case the cylinder, that is the contracted portion thereof, is provided with a single set of ports 63 which extend practically entirely around the cylinder, the upper portion containing the partition 19 being supported from the main portion of the cylinder by a series of ribs 63ª or in any other suitable manner. The inner and outer valve sleeves are provided with ports 64 and 65 which also extend practically around the entire cylinder, the parts of the sleeve being connected by portions 64ª and 65ª. The upper end of the outer sleeve is enlarged at 66 so as to form a space 67 between the sleeves. The valve casing 60 is provided with inlet passages 68 and exhaust passages 69, connected with the inlet and exhaust manifolds respectively. When the valves are in the positions shown in Figs. 3 and 4, the interior of the cylinder will be in communication with the exhaust manifold, while when the valves are in the position shown in Fig. 5, the interior of the cylinder will be in communication with the inlet manifold. The sleeves are operated at approximately 90° apart and therefore the single port in the inner sleeve is always moving past the cylinder port at the time the outer sleeve is in its two extreme positions. It will thus be seen that with this construction a single cylinder port performs the function of both inlet and exhaust ports, and therefore the opening of this port can be a maximum since it extends practically entirely around the cylinder, thus providing for a maximum admission of the charge and the quick and perfect exhaust of the burnt gases, and thereby increasing the power and efficiency of the motor. Fig. 3 shows at 70 an igniter plug and the method of mounting the same in the cylinder.

It is obvious that various changes may be made in the details of construction without departing from this invention, and it is therefore to be understood that this invention is not to be limited to the specific construction shown and described.

Having thus described the invention, what is claimed is:

1. In a hydrocarbon motor, the combination with a crank shaft and a plurality of cylinders located in line, of valve sleeves for said cylinders, a pair of rock shafts extending across the tops of said cylinders and connected to operate said sleeves, and means for operating said rock shafts from said crank shaft.

2. In a hydrocarbon motor, the combination with a crank shaft and a plurality of

cylinders located in line, of a pair of valve sleeves for each cylinder, a pair of operating shafts extending across the tops of said cylinders, means operatively connecting each of said shafts with one valve sleeve of each of said cylinders, and means for operating said operating shafts from said crank shaft.

3. In a hydrocarbon motor, the combination with four cylinders thereof and a crank shaft, of a plurality of sliding valves for each cylinder, a pair of rock shafts mounted on the upper parts of the cylinders, connections from said rock shafts to the valves of the four cylinders for operating said valves, and means for operating the rock shafts from the crank shaft.

4. In a hydrocarbon motor, the combination with four cylinders thereof and a crank shaft, of a plurality of sliding valves for each cylinder, a pair of rock shafts mounted on the upper parts of the cylinders, connections from said rock shafts to the valves of the four cylinders for operating said valves, and means for operating the rock shafts from the crank shaft including two-to-one gearing whereby the motor is operated on the four stroke cycle.

5. In a hydrocarbon motor, the combination with four cylinders thereof and a crank shaft, of a plurality of sliding valves for each cylinder, a pair of rock shafts mounted on the upper parts of the cylinders, arms extending from both sides of said rock shafts, connections from said arms to said valves for operating them, and means for operating the rock shafts from the crank shaft.

6. In a hydrocarbon motor, the combination with a cylinder having a single inlet and outlet port, of valve sleeves surrounding the upper end of the cylinder and controlling the inlet and outlet of gases through said port, and a piston operating in said cylinder below said sleeves.

7. In a hydrocarbon motor, the combination with a cylinder having a contracted portion and a single inlet and outlet port in said portion, of a piston in said cylinder below said portion, and valve mechanism for controlling the inlet and outlet of gases through said port including a valve sleeve engaging said portion.

8. In a hydrocarbon motor, the combination with a cylinder having a contracted head and a single inlet and outlet port therein, of valve sleeves surrounding said head and controlling the inlet and outlet of gases through said port, and a piston operating in said cylinder.

9. In a hydrocarbon motor, the combination with a cylinder having a contracted portion, of a piston in said cylinder below said portion, a casing surrounding said portion and forming therewith an annular valve chamber, valve mechanism including a valve sleeve in said chamber, a crank case, an oil conduit connecting said crank case and chamber, and means for operating said valve sleeve.

10. In a hydrocarbon motor, the combination with a cylinder, of valve sleeves surrounding the upper end of the cylinder, a piston operating in the cylinder entirely below the sleeves, and a detachable water jacketed casing of no greater diameter than the cylinder surrounding said sleeves.

11. In a hydrocarbon motor, the combination with a cylinder having a contracted portion, of a piston in said cylinder below said portion, a detachable water jacketed casing surrounding said portion and forming therewith an annular valve chamber, the diameter of the outer wall of which is less than the outer diameter of the cylinder wall, and valve mechanism including a valve sleeve in said chamber.

12. In a hydrocarbon motor, the combination with a cylinder having a contracted portion of a piston in said cylinder below said portion, a casing surrounding said portion and forming therewith an annular valve chamber, valve mechanism including a valve sleeve in said chamber, means including said valve sleeve as an active element for lubricating the bearing surfaces within said valve chamber, and means for operating said valve sleeve.

13. In a hydrocarbon motor, the combination with a plurality of cylinders each comprising a portion in which the piston operates and two cylindrical portions arranged concentrically above the piston portion and one of which forms an integral extension of the piston portion and the other of which is detachably secured to the piston portion making a tight joint therewith, said cylindrical portions being separated from each other to form an annular valve chamber therebetween, and said cylindrical portions having coöperating ports, of a sleeve valve arranged in said annular chamber and adapted to control said ports, an operating shaft common to two or more of said cylinders, bearings for said operating shaft on the said integral cylindrical portion of said cylinders, and connections from said shaft to the valves of two or more of said cylinders for operating the valves, and means for actuating the shaft from the motor crank shaft.

In testimony whereof I affix my signature in presence of two witnesses.

MILTON TIBBETTS.

Witnesses:
W. H. FINCKEL, Jr.,
C. J. DALE.

R. HUFF.

CONTROLLING MECHANISM FOR MOTOR VEHICLES.

APPLICATION FILED AUG. 13, 1910.

1,121,838. Patented Dec. 22, 1914.

2 SHEETS—SHEET 1.

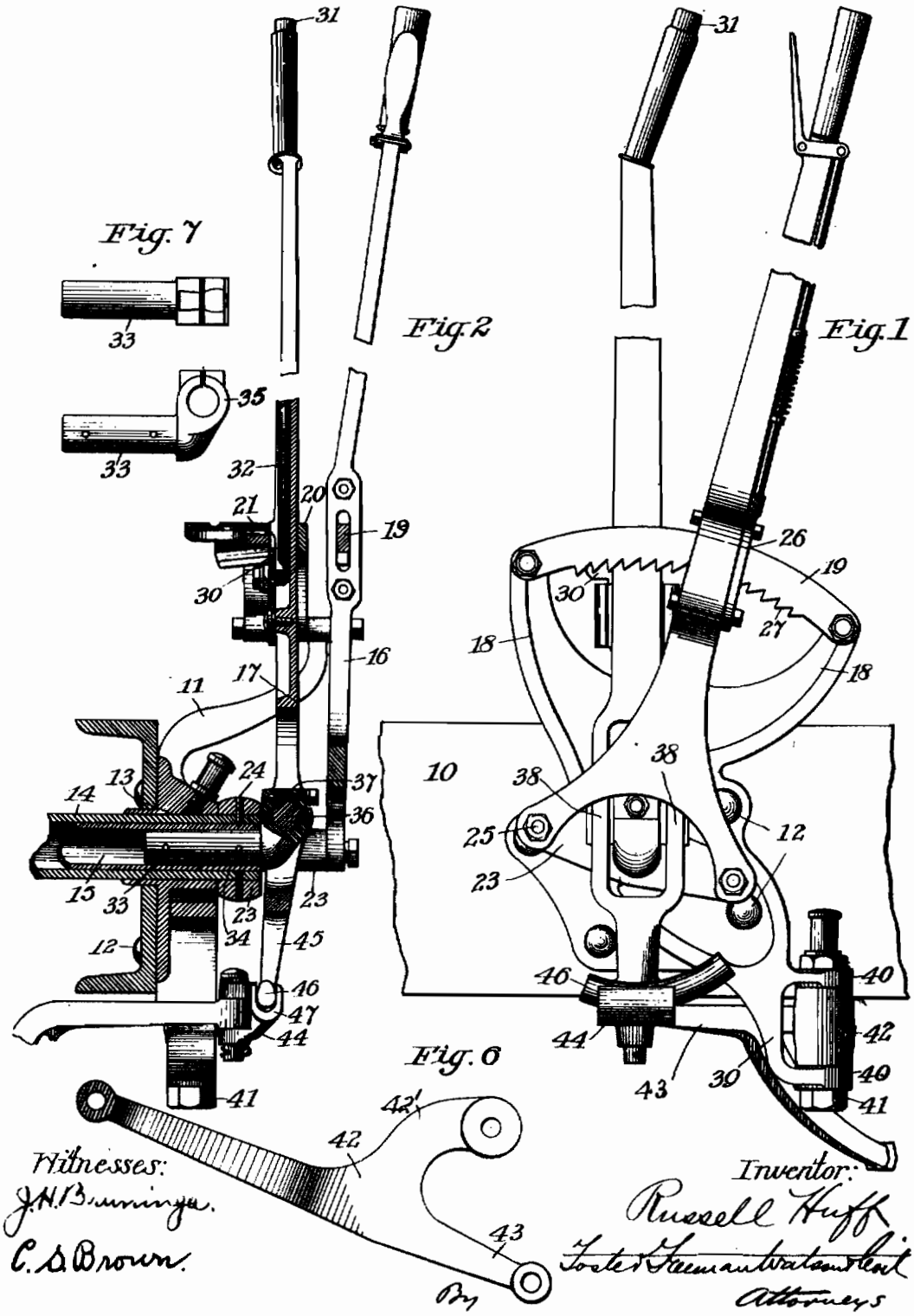

R. HUFF.

CONTROLLING MECHANISM FOR MOTOR VEHICLES.

APPLICATION FILED AUG. 13, 1910.

1,121,838. Patented Dec. 22, 1914.

2 SHEETS—SHEET 2.

Fig. 3

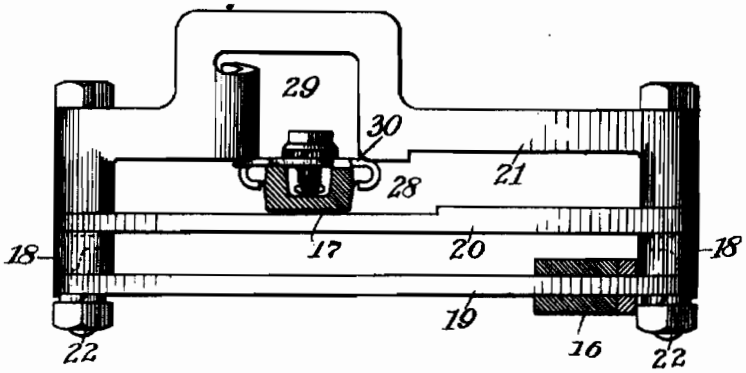

Fig. 5

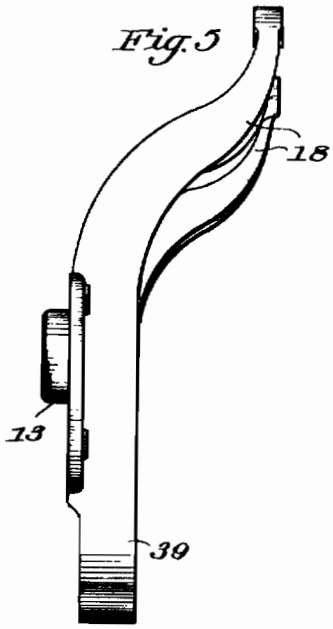

Fig. 4

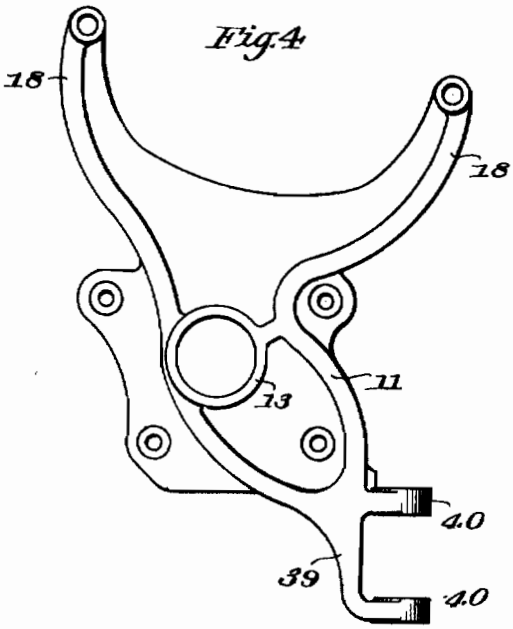

Witnesses:

J. N. Cunningham

C. S. Brown

Inventor:

Russell Huff

By Foster Freeman Watson & Coit

Attorneys

UNITED STATES PATENT OFFICE.

RUSSELL HUFF, OF DETROIT, MICHIGAN, ASSIGNOR TO PACKARD MOTOR CAR COMPANY, OF DETROIT, MICHIGAN, A CORPORATION OF MICHIGAN.

CONTROLLING MECHANISM FOR MOTOR-VEHICLES.

1,121,838. Specification of Letters Patent. Patented Dec. 22, 1914.

Application filed August 13, 1910. Serial No. 577,053.

To all whom it may concern:

Be it known that I, RUSSELL HUFF, a citizen of the United States, and resident of Detroit, Wayne county, State of Michigan, have invented certain new and useful Improvements in Controlling Mechanism for Motor-Vehicles, of which the following is a specification.

This invention relates to controlling mechanism and more particularly to such mechanism as is employed for controlling the gears, the brake, or other controlled mechanism of a motor vehicle.

The object of this invention is to simplify the construction of such mechanism and to arrange the parts in a most compact and efficient form.

The invention will be described in connection with the accompanying drawings, in which:

Figure 1 is a side elevation of a portion of a motor vehicle with a controlling mechanism embodying my invention; Fig. 2 is a vertical section through the parts shown in Fig. 1 and showing some of the parts in elevation; Fig. 3 is a plan view of the lever guiding members showing the levers in section; Figs. 4 and 5 are side and end views, respectively, of the lever bracket; and Figs. 6 and 7 are detail views of parts.

Referring to the drawings, 10 represents one of the side members of a motor vehicle frame, to which a bracket 11 of peculiar form is secured as by rivets 12. This bracket 11 is provided with a main transverse bearing 13 in which are mounted a pair of concentric or nested shafts 14 and 15 connected respectively with the brake lever 16 and the gear shifting or controlling lever 17. The bracket 11 is further provided with a pair of separated upwardly extending arms 18 to which the guide members 19, 20 and 21 are secured by bolts 22 as shown particularly in Fig. 3. These guide members form the guides for the controlling and brake levers.

A yoke 23 is secured to the outer end of the shaft 14 as by brazing and pins 24. The brake lever has its lower bifurcated end secured to the ends of the yoke by bolts 25 so that the outer shaft can be rocked by the brake lever. It will be understood that the outer shaft is suitably connected to the brake mechanism. This construction permits the gear shifting lever 17 to be connected to the inner shaft 15 and mounted inside of the brake lever whereby the brake lever shaft which must bear the greater strains may be the outer and stronger of the two nested shafts. The brake lever 16 is provided with a latch 26 which coöperates with the teeth 27 on the guiding member 19 for setting the brake in various positions.

The gear shifting lever 17 is adapted to move forwardly and backwardly in a slot 28 formed between the guide members 20 and 21 to obtain various forward speeds of the vehicle and is also adapted to be moved laterally or transversely into the notch or recess 29 formed in the guide member 21 to mesh the reverse gears of the vehicle. A suitable latch 30 operated by a thumb piece 31 and a rod 32 may be provided to prevent the gear shifting lever being moved into reverse position inadvertently.

In the end of the operating shaft 15, which may be connected with the forward speed gears of the vehicle, is a plug 33 brazed or secured to the shaft 15 by pins 34, and this plug projects slightly from the shaft and is formed with a pair of jaws 35 adapted to clamp between them a trunnion piece 36, the clamping action being obtained by a bolt 37. Thus the trunnion piece 36 is securely held against either rotary or endwise movement and no cotter pins or other securing devices are necessary.

The gear shifting lever 17 is divided adjacent its connection with the plug 33 and is formed with trunnion bearings 38 which fit the trunnion piece 36 and it will be seen that this connection causes the operating shaft 15 to be rocked by the forward and backward movements of the lever 17 and permits an independent movement of the lever 17 into the notch 29, this latter movement being accomplished by rocking the lever on the trunnion piece 36.

The bracket 11 is further provided with an integral forwardly extending lug 39 upon which are two separated ears 40 forming a bearing for the pivot bolt 41 and the operating lever 42. This operating lever has an arm 43 which is connected by a link 44 with the downwardly extending end 45 of the gear shifting lever 17. The lever 42 is also provided with an arm 42′ which is connected with the reverse gear shifting mechanism. Said end 45 is formed with a segmental piece 46 which moves in a groove

or slideway 47 in the link 44 whereby the backward and forward movements of the lever 17 are not conveyed to the operating lever 42, but the transverse movement of the lever 17 causes the lever 42 to rock upon its pivot and through other suitable connections, not shown, to operate the reverse gears of the vehicle.

It will thus be seen that all the bearings for the levers together with the guides are supported on a single bracket and that all these bearings are integral therewith whereby the bearings and the other parts may be accurately machined and the parts may be easily assembled with a minimum of expense. The lug 30 and the ears 40 thereon project forwardly so as to lie in substantially the same plane with the body of the bracket so that the bearing lugs will not project beyond the bracket any more than necessary, thereby not only improving appearances but also rendering the structure more compact since the operating lever 42 can be located below the side member with the greater part of it within the outside limits of the side member. It will be seen that the operating lever is curved so as to permit this construction.

By connecting the controlling lever to the inner shaft and the brake lever to the outer shaft the controlling lever can be located inside of the brake lever nearest the chauffeur so that the operation thereof will be facilitated. This is of special advantage in view of the fact that the controlling lever is moved inwardly and therefore away from the brake lever for reversing. This construction also permits the outer shaft to become the brake shaft and thereby can be made much stronger for the same amount of material. This arrangement of the levers and shafts results in a very compact and simple arrangement.

It is obvious that various changes may be made in the details of construction without departing from this invention, and it is therefore to be understood that this invention is not to be limited to the specific construction shown and described.

Having thus described my invention, what I claim is:

1. In a controlling mechanism for motor vehicles, the combination with a controlling lever pivotally mounted between its ends and adapted to move forward and backward and transversely, of an operating lever connected with the controlling lever below the pivot thereof and adapted to be actuated by the transverse movement of the controlling lever, and a single bracket for supporting both of said levers.

2. In a controlling mechanism for motor vehicles, the combination with a bracket, of a controlling lever supported thereby, an operating lever, actuating connections between said levers, and a bearing for said operating lever on said bracket below the point of support of the controlling lever.

3. In a controlling mechanism for motor vehicles, the combination with a bracket, of a rock shaft supported on said bracket, a controlling lever supported on said shaft to rock the same and to swing transversely, a lever connected to said controlling lever to be operated thereby, and a bearing for said lever on said bracket below said rock shaft.

4. In a controlling mechanism for motor vehicles, a lever bracket provided with a transverse bearing, a pair of guide supporting arms above said bearing, and a pivotal bearing lug below said bearing.

5. In a controlling mechanism for motor vehicles, a lever bracket provided with a transverse bearing, a pair of spaced upwardly extending arms above said bearing, and a pivotal bearing lug below said bearing and integral therewith.

6. In a controlling mechanism for motor vehicles, a lever bracket provided with a transverse bearing, a pair of guide supporting arms above said bearing, and a forwardly extending pivotal bearing lug below said bearing.

7. In a controlling mechanism for motor vehicles, a lever bracket provided with guide supporting means, means for supporting a lever thereon, and a bearing lug located in substantially the same plane as the bracket body.

8. In a controlling mechanism for motor vehicles, a lever bracket provided with a transverse bearing, a pair of guide supporting arms above said bearing, and a bearing lug below said bearing and provided with a pair of vertically separated ears located in substantially the same plane as the bracket body.

9. In a controlling mechanism for motor vehicles, the combination with a side member of the vehicle, of a bracket secured thereto, a controlling lever mounted thereon, a bearing lug on said bracket, and a lever mounted on said bearing lug extending below said side member and connected to be operated by said controlling lever.

10. In a controlling mechanism for motor vehicles, the combination with a side member of the vehicle, of a bracket secured thereto, a controlling lever mounted thereon, a bearing lug on said bracket and extending below said side member, and a lever on said bearing lug and connected to be operated by said lever.

11. In a controlling mechanism for motor vehicles, the combination with a plurality of concentric shafts, of a controlling lever connected to operate the inner one of said shafts by a backward and forward movement, and movable transversely, mechanism

operated by the transverse movement of said lever, and an additional lever connected to operate the outer one of said shafts.

12. In a controlling mechanism for motor vehicles, the combination with a plurality of concentric shafts, of a controlling lever connected to operate the inner one of said shafts and movable forward and backward and transversely to operating positions, and a brake lever mounted outside of said controlling lever and connected to operate another of said shafts.

13. In a controlling mechanism for motor vehicles, the combination with a plurality of concentric shafts, of a controlling lever mounted for transverse movement on the inner shaft, an additional lever mounted outside of said controlling lever, and a yoke connecting said last lever to the outer shaft.

14. In a controlling mechanism for motor vehicles, the combination with a plurality of concentric shafts, of a controlling lever mounted for transverse movement on the inner shaft and adapted to rock the same by a forward and backward movement, an additional lever mounted outside of said controlling lever, and a yoke connecting said last lever to the outer shaft.

15. In a controlling mechanism for motor vehicles, the combination with a plurality of concentric shafts, of a controlling lever mounted for transverse movement on the inner shaft and adapted to rock the same by a forward and backward movement, an arm on said controlling lever extending below said shafts, mechanism connected to said arm and operated by a transverse movement of said controlling lever, an additional lever mounted outside of said controlling lever, and a yoke connecting said last lever to the outer shaft.

16. In a controlling mechanism for motor vehicles, the combination with a bracket, of a plurality of concentric tubular shafts mounted in said bracket, a plug secured in the end of the inner shaft, a transverse pivot on said plug, a controlling lever mounted on said pivot, and an additional lever connected to operate the outer shaft.

17. In a controlling mechanism for motor vehicles, the combination with a bracket, of a plurality of concentric tubular shafts mounted in said bracket, a plug secured in the end of the inner shaft, a transverse pivot on said plug, a controlling lever mounted on said pivot, an additional lever outside of said controlling lever, and a yoke connecting said second lever to the outer shaft.

18. In a controlling mechanism for motor vehicles, the combination with a bracket having spaced arms and a lug, and a guide extending between said arms, of a controlling lever supported by said bracket and adapted to move along said guide, an operating lever, actuating connections between said levers, and a bearing for said operating lever on said lug below the controlling lever support.

19. In a controlling mechanism for motor vehicles, the combination with a bracket, a tubular shaft supported therein, a plug secured in the end of said shaft and having jaws, a trunnion piece removably clamped in said jaws against rotary and endwise movement, and a controlling lever pivoted on said trunnion piece.

20. In a controlling mechanism for motor vehicles, the combination with a bracket, of a tubular shaft mounted in said bracket, a support on said shaft extended beyond the end thereof, a brake lever secured upon the outer end of said support, a shaft nested within said tubular shaft, a piece on said second shaft having a pair of clamping jaws, a trunnion piece removably secured in said jaws, and a controlling lever arranged inside of said brake lever and mounted upon said trunnion piece.

In testimony whereof I affix my signature in presence of two witnesses.

RUSSELL HUFF.

Witnesses:

W. H. FINCKEL, JR.,

MAYME RYAN.

Correction In Letters Patent No. 1,121,838.

It is hereby certified that in Letters Patent No. 1,121,838, granted December 22, 1914, upon the application of Russell Huff, of Detroit, Michigan, for an improvement in "Controlling Mechanism for Motor-Vehicles," an error appears in the printed specification requiring correction as follows: Page 2, line 16, for the reference-numeral "30" read *39;* and that the said Letters Patent should be read with this correction therein that the same may conform to the record of the case in the Patent Office.

Signed and sealed this 9th day of February, A. D., 1915.

[SEAL.]

J. T. NEWTON,

Acting Commissioner of Patents.

R. HUFF.

MOTOR VEHICLE.

APPLICATION FILED OCT. 13, 1910.

1,082,026.

Patented Dec. 23, 1913.

2 SHEETS—SHEET 1.

Fig. 1.

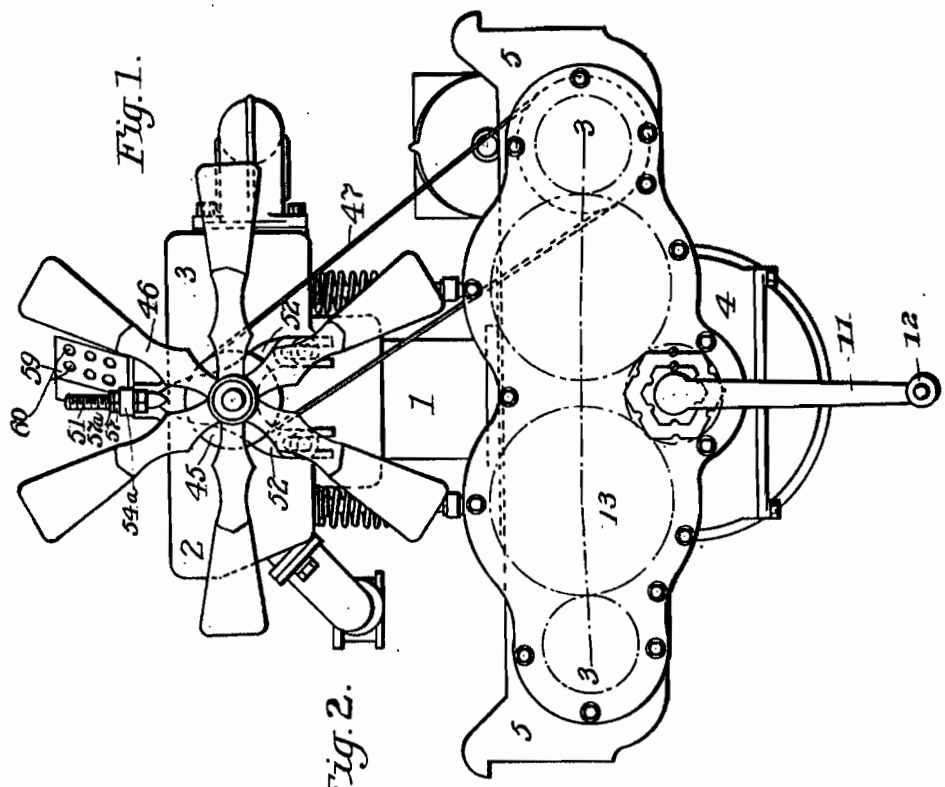

Fig. 2.

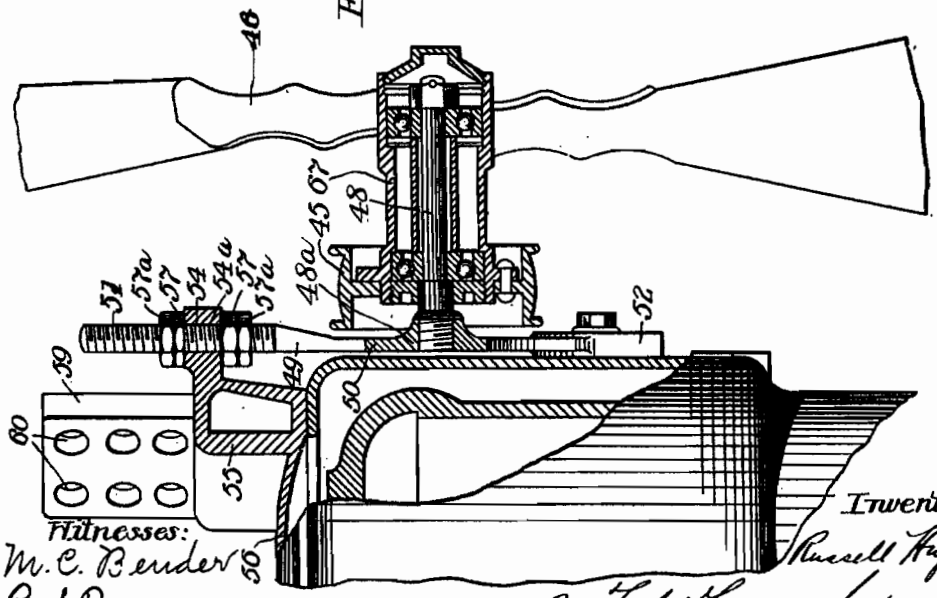

Witnesses:
M. C. Bender
C. S. Brown.

Inventor:
Russell Huff
By Foster Freeman Watson & Coit
Attorneys.

THE NORRIS PETERS CO., PHOTO-LITHO., WASHINGTON, D. C.

R. HUFF.

MOTOR VEHICLE.

APPLICATION FILED OCT. 13, 1910.

1,082,026.

Patented Dec. 23, 1913.

2 SHEETS—SHEET 2.

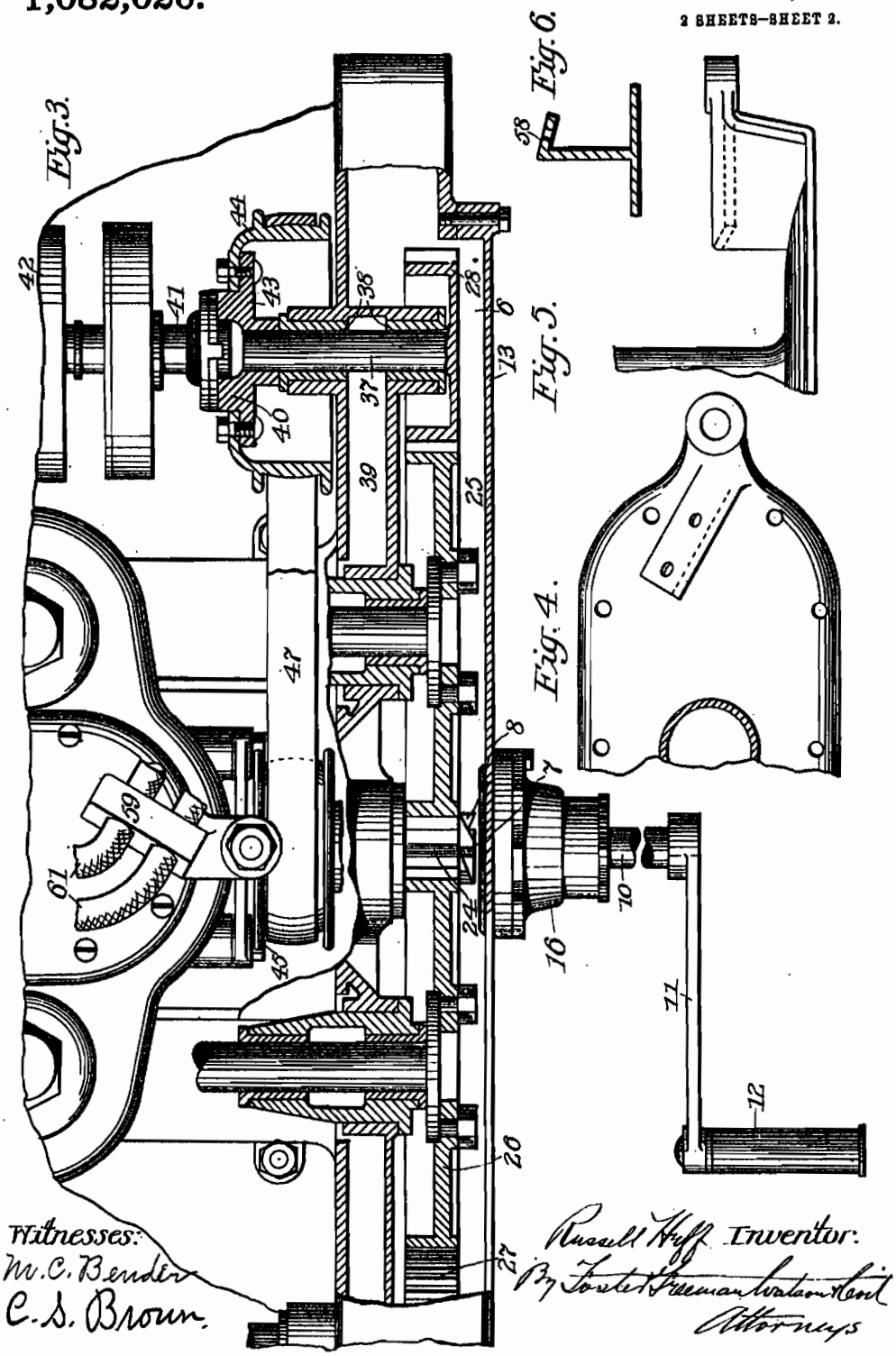

Witnesses:
W. C. Bender
C. S. Brown.

Russell Huff Inventor:
By Foster Freeman Watson & Coit
Attorneys

THE HARRIS PETERS CO., PHOTO-LITHO., WASHINGTON, D. C.

UNITED STATES PATENT OFFICE.

RUSSELL HUFF, OF DETROIT, MICHIGAN, ASSIGNOR, BY MESNE ASSIGNMENTS, TO PACKARD MOTOR CAR COMPANY, OF DETROIT, MICHIGAN, A CORPORATION OF MICHIGAN.

MOTOR-VEHICLE.

1,082,026. Specification of Letters Patent. Patented Dec. 23, 1913.

Original application filed June 27, 1908, Serial No. 440,699. Divided and this application filed October 13, 1910. Serial No. 586,912.

To all whom it may concern:

Be it known that I, RUSSELL HUFF, a citizen of the United States, and resident of Detroit, Wayne county, State of Michigan, have invented certain new and useful Improvements in Motor-Vehicles, of which the following is a specification.

This application is a division of my application, Serial No. 440,699, filed June 27, 1908.

This invention relates to motor vehicles and particularly to the supporting means for the cooling fan and the associated parts of such means. It has special reference to the arrangement of the adjustable fan bracket and the supporting means for the high tension wires of the motor.

One of the objects of my invention is to construct a fan bracket that is of simple design and is readily adjustable.

Another object of my invention is to construct a supporting bracket for the fan bracket which will also act as a supporting means for the high tension wires of the motor.

Other objects and features of my invention will be apparent from the following description.

In the accompanying drawings, Figure 1 is a front elevation of a motor embodying my invention; Fig. 2 is a view partly in vertical section of the fan and its adjustable bracket; Fig. 3 is a cross section on the line 3—3 of Fig. 1; Fig. 4 is a plan view of a portion of the cover of the water jacket of the cylinder showing my improved bracket support; Fig. 5 is a detail side view of what is shown in Fig. 4; and Fig. 6 is a cross section of the bracket shown in Fig. 5.

In the drawings, 1 represents one of the cylinders of a hydrocarbon motor which is provided with the inlet and exhaust chambers 2, 3. The crank case 4 has preferably at its front end the laterally extending hollow arms 5, the ends of which are adapted to rest upon the side bars of the motor vehicle frame, as will be understood. These hollow arms form a gear case 6 in which are mounted a train of gears for driving the cam shafts, water pump and magneto for properly operating the motor. The crank shaft 7 extends through the crank case into the gear case 6 and there terminates, carrying upon its end the clutch teeth 8 with which the clutch teeth of the starting shaft 10 coöperate. The starting shaft is provided with the usual crank arm 11 and handle 12 for manually operating it to start the engine. The front end of the gear case 6 is provided with a removable cover 13 to which is secured a sleeve 16 in which the starting shaft 10 is mounted. For a further description of this starting shaft, reference may be had to the above mentioned parent application.

On the end of the crank shaft 7 is secured a driving gear 24 which meshes with the cam shaft gears 25, 26, which latter gears drive the gears 27, 28, on the pump and magneto shafts respectively. The magneto shaft 37 is mounted in spaced bearings 38 in the crank case arm and is oiled by the spray from the crank case reaching it through the channel 39. On the rear end of the shaft 37 is mounted one of the members 40 of a universal coupling by which it is connected with the armature shaft 41 of the magneto 42. The member 40 has an annular flange 43 formed integral therewith and to this flange is bolted the web of a pulley 44, which pulley extends forwardly from said shaft. The pulley 44 is arranged in a vertical plane with the pulley 45 which is secured to the hub of the fan 46 so that the fan may be driven by a belt 47 passing over these pulleys.

The fan and its pulley are mounted upon a bracket on the front side of the forward motor cylinder, and this bracket is adjustably secured to a bracket carried by the cover of the water jacket of the cylinder. As will be seen by reference to Fig. 2, the hub 67 of the fan surrounds the spindle 48 and is mounted on ball bearings thereon. This spindle 48 projects forwardly from the bracket 49, being rigid therewith and formed in any suitable way. As shown, it is screwed into a suitable boss 48ª on the bracket. The bracket 49 is formed of a central vertical portion 50 which carries the spindle 48, an upwardly extending screw-threaded portion or arm 51, and two downwardly extending separated arms 52 which are bifurcated at their lower ends forming slots parallel with the arm 51. The arms 52 are adjustably secured to the end wall of the cylinder by bolts 53 fastened in the bosses in the cylinder through the slots. The arm 51 passes through an opening 54

formed in a forward extension 54ᵃ of a bracket 55 carried by the water jacket cover 56, and is adjustably secured to said latter bracket by the two nuts 57 arranged on opposite sides of the extension 54ᵃ. By adjusting these nuts the bracket may be raised or lowered and may be held firmly in adjusted position by the nuts 57ᵃ and the bolts 53, thus permitting tension adjustment of the belt 47.

The bracket 55 carried by the water jacket cover 56 may be integral with the cover or may be secured thereto in any suitable way. This bracket has a suitably inclined ledge 58 upon which is mounted a support 59 for the high tension wires of the motor, this support being preferably composed of fiber block with suitable openings 60 therein for the passage of the ignition wires 61 which are adapted to be connected with the magneto. Thus it will be seen that the water jacket cover 56 has formed integral with it or rigidly secured thereto a bracket for holding the supporting means for the ignition wires and an extension for supporting the upper end of the fan bracket.

Having thus described my invention, what I claim is:

1. A fan bracket comprising a central portion carrying a rigid shaft at right angles thereto constituting a fan bearing, an end portion in the form of a screw-threaded rod, and an end portion opposite the screw-threaded portion made up of spaced arms, the ends of which are bifurcated and parallel to the screw-threaded portion.

2. The combination with a casing, of a bracket fitting against said casing and having an end in the form of a screw-threaded rod, an arm projecting from said casing and provided with an opening through which said screw-threaded portion extends, nuts on said screw-threaded portion on opposite sides of said arm, spaced arms on said bracket parallel with the screw-threaded portion and having bifurcated ends, bolts on said casing engaging said bifurcated ends, and a fan carried by said bracket.

3. In a device of the class described, the combination with a hydrocarbon motor, of a bracket supported on the casing of the motor cylinder, a support for high tension electric cables on said bracket, an arm on said bracket extending beyond the cylinder and a fan bracket adjustably connected to said arm.

4. In a device of the class described, the combination with a hydrocarbon motor, of a bracket supported on the cover of the motor cylinder, a support for high tension electric cables mounted on said bracket, an arm on said bracket extending beyond the edge of the cylinder and provided with a vertical hole, a fan bracket on the side of said cylinder having an upper screw-threaded portion extending through said arm, and nuts on said screw-threaded portion on opposite sides of said arm.

5. In a device of the class described, the combination with a hydrocarbon motor, of a bracket supported on the cover of the motor cylinder comprising an upright web, a transverse flange and an end arm projecting beyond the edge of the cylinder, a support for high tension electric cables secured on said transverse flange, and a fan bracket at the side of said cylinder having its upper end secured to said arm.

6. In a device of the class described, the combination with a hydrocarbon motor, of a crank shaft, operating mechanism including a magneto shaft connected by gearing to said crank shaft, a vertically movable bracket having spaced arms making sliding engagement with the cylinder of said motor, means on said cylinder for vertically adjusting said bracket, a rigid shaft carried by said bracket parallel with the magneto shaft, a fan mounted on said rigid shaft and provided with a pulley, and a pulley on said magneto shaft adapted to drive the fan by belt connection.

7. In a device of the class described, the combination with a hydrocarbon motor, of a crank shaft, operating mechanism including a magneto shaft connected by gearing to said crank shaft, a vertically movable bracket one end of which is screw-threaded and the other end of which is made up of spaced arms provided with vertical slots, bolts on the cylinder of said motor working in said slots, an arm on said cylinder having a perforation through which the screw-threaded portion of the bracket extends, a rigid shaft carried by said bracket parallel with the magneto shaft, a fan mounted on said rigid shaft and provided with a pulley, and a pulley on said magneto shaft adapted to drive the fan by belt connection.

In testimony whereof I affix my signature in presence of two witnesses.

RUSSELL HUFF.

Witnesses:
C. I. Dale,
W. H. Finckel, Jr.

Copies of this patent may be obtained for five cents each, by addressing the "Commissioner of Patents, Washington, D. C."

A. LOOMIS.

TRANSMISSION MECHANISM FOR MOTOR VEHICLES.

APPLICATION FILED NOV. 3, 1910.

1,157,015. Patented Oct. 19, 1915.

2 SHEETS—SHEET 1.

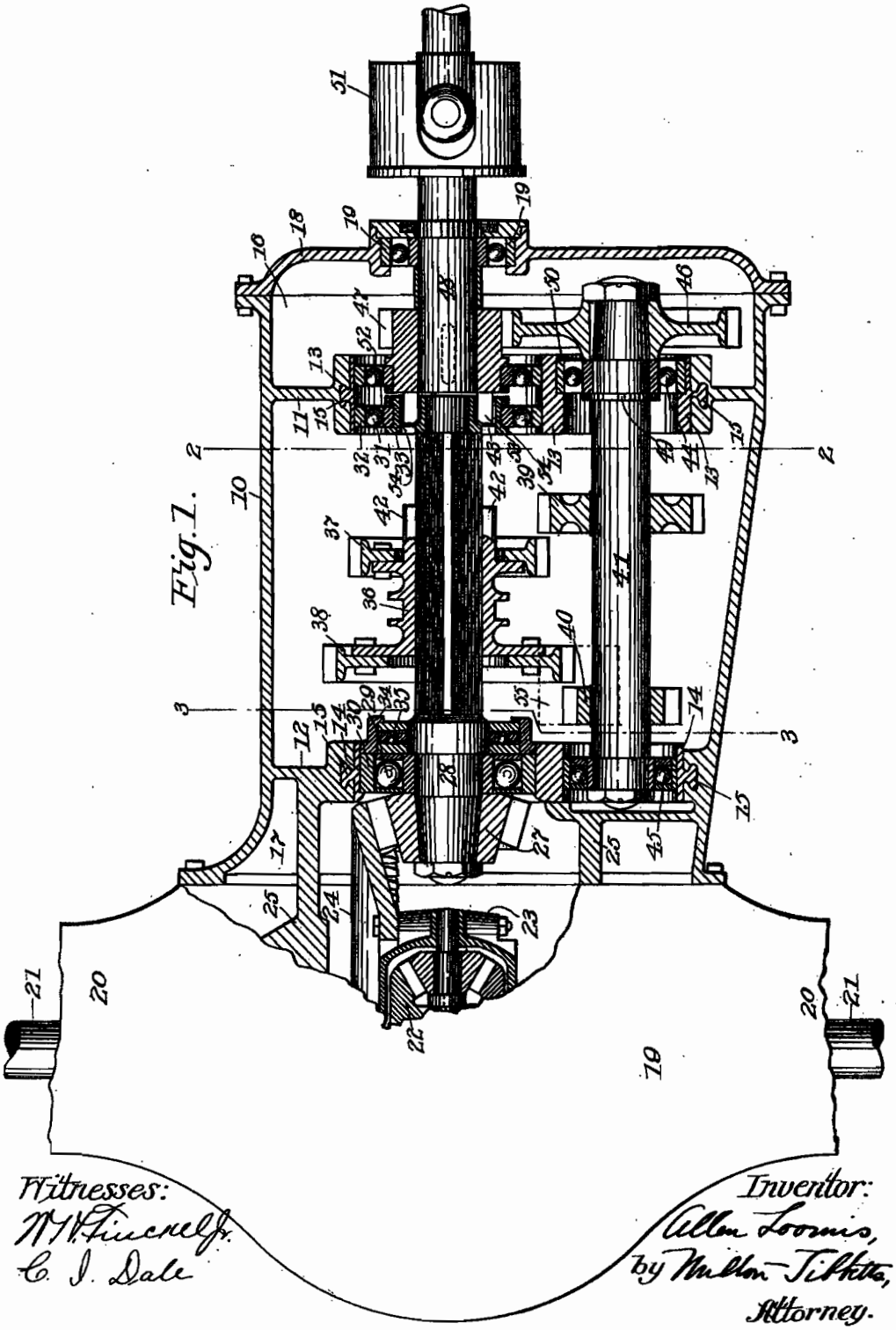

Fig. 1.

Witnesses:
W. H. Finckel Jr.
C. I. Dale

Inventor:
Allen Loomis,
by Milton Tibbetts,
Attorney.

A. LOOMIS.

TRANSMISSION MECHANISM FOR MOTOR VEHICLES.

APPLICATION FILED NOV. 3, 1910.

1,157,015. Patented Oct. 19, 1915.

2 SHEETS—SHEET 2.

Fig. 2.

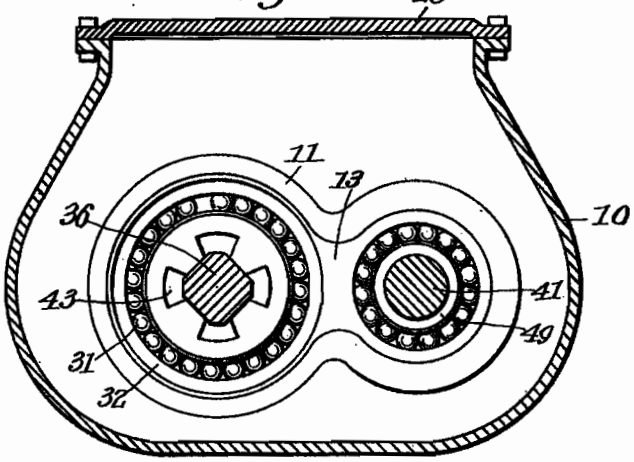

Fig. 3.

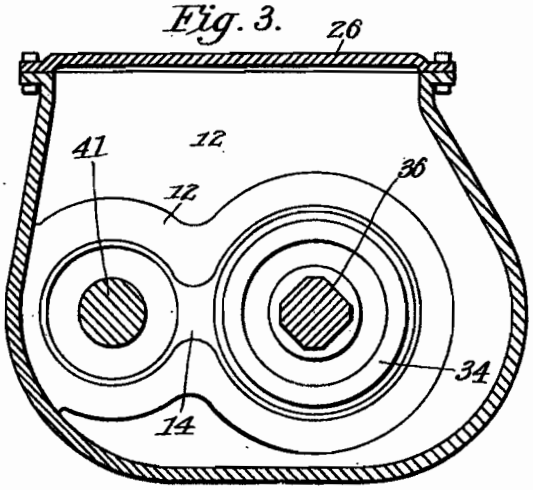

Fig. 4.

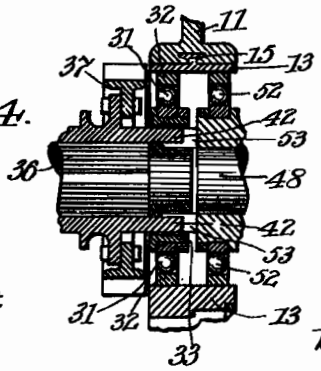

Witnesses:
W. H. Finckel Jr.
C. I. Dale

Inventor:
Allen Loomis,
by Milton Tibbetts,
Attorney.

COLUMBIA PLANOGRAPH CO., WASHINGTON, D. C.

UNITED STATES PATENT OFFICE.

ALLEN LOOMIS, OF DETROIT, MICHIGAN, ASSIGNOR TO PACKARD MOTOR CAR COMPANY, OF DETROIT, MICHIGAN, A CORPORATION OF MICHIGAN.

TRANSMISSION MECHANISM FOR MOTOR-VEHICLES.

1,157,015. Specification of Letters Patent. Patented Oct. 19, 1915.

Application filed November 3, 1910. Serial No. 590,583.

To all whom it may concern:

Be it known that I, ALLEN LOOMIS, a citizen of the United States, and resident of Detroit, Wayne county, State of Michigan, have invented certain new and useful Improvements in Transmission Mechanism for Motor-Vehicles, of which the following is a specification.

This invention relates to transmission mechanism for motor vehicles and particularly to the change speed gearing usually employed between the motor and rear axle of a motor vehicle.

In the construction of the modern automobile one of the chief considerations is quietness of the operating parts, and one of the most troublesome parts in this respect is the gear box. To attain quietness of bevel and spur gears it is absolutely necessary, in addition to having the gears cut correctly, to have them mounted in perfect alinement and in bearings that permit of practically no play. It is, of course, impossible to produce a bearing that has absolutely no play, so that it becomes the aim of every designer to so place his bearings and gears that the play in the bearings will produce the least amount of play in the gears, that is, he works to eliminate magnifying the play as is the case where a gear is mounted on one end of a shaft and the shaft is supported on a pair of bearings, both of which are separated from the gear. Any radial thrust on the gear then causes play of the shaft several times that of the combined play in the two bearings, depending of course upon the distance the gear is set away from its nearest bearing and the distance the bearings are separated from each other. It is also desirable to have every annular bearing set directly in the casing or other supporting structure, or in other words, it is undesirable to have one shaft mounted in bearings in a second alined shaft and said second shaft mounted in the casing. In this latter structure the gears are subjected to the combined play of the two bearings. It is undesirable also to mount the outer ring of an annular ball bearing in a collar screwed into the casing for the reason that it is impossible to thread the necessary large opening and the collar accurately enough to give good results. The cutting die will frequently find one side softer than the other and the result is an eccentric bearing.

The present invention is designed to overcome the various objectionable features outlined above, and the structure by which the objects of the invention are obtained will be described in connection with the accompanying drawings, in which—

Figure 1 is a horizontal sectional view through a motor vehicle transmission mechanism with the differential casing in plan; Fig. 2 is a transverse section on the line 2—2 of Fig. 1; Fig. 3 is a transverse section on the line 3—3 of Fig. 1; and Fig. 4 is a fragmentary view showing the gears of Fig. 1 in direct driving position.

Referring to the drawings, 10 represents the main supporting structure or casing of the transmission mechanism, which casing is tubular in form and provided adjacent its ends with transverse walls 11 and 12, which walls form supports for the bearings of the change speed gearing.

Cast or otherwise rigidly secured in the walls 11, 12, are steel supporting members 13, 14, of S-shape, the two annular openings in each of these supports being machined out to receive the bearings of the change speed gearing as will be more fully hereinafter described. As shown, these supporting members are provided with integral dove tails 15 whereby the cast metal of the casing 10 securely locks the supporting members in place and they thereby become as an integral part of the casing. This arrangement is such that the supporting members 13, 14, may be machined after the casing 10 has been made and the openings for the bearings will therefore be true as nearly as it is possible to make them with accurate machining. This construction permits of using aluminum for the main part of the casing with a harder metal such as steel for the bearing supporting members.

The casing 10 is formed with open ends 16, 17, and the former is closed by a removable cover 18 in which is a bearing 19 coaxial with one of the openings in the supporting member 13. The rear end 17 of the casing is closed by the differential casing

19, which latter casing has laterally extending sleeves 20 forming the stationary rear axle or jack shaft of the motor vehicle. The axle sections 21 extend into this casing and are suitably connected with the differential gearing 22, upon the housing 23 of which is secured the bevel driving gear 24. The differential housing may be supported in bearings in lugs 25 extending rearwardly from the casing 10 thereby insuring proper alinement with the bearings of the change speed gearing. It will be understood that the casing 10 is provided with a suitable detachable cover 26 in the upper wall thereof for assembling and removing the gears and shafts arranged between the walls 11, 12.

Arranged to mesh with the gear 24 is a driving pinion 27 secured on the end of the driven shaft 28 which shaft is supported in an annular ball bearing 29, the outer ring 30 of which rests directly in one of the openings in the supporting member 14, and an annular ball bearing 31, the outer ring 32 of which rests directly in the supporting member 13, as will be clearly seen from the drawings. The inner ring of the bearing 31 may rest upon an integral part of the shaft 28, which part would preferably be in the form of a flange, or an annulus 33 may be secured to the end of the shaft 28, as by pressing it thereon so that it will turn with the shaft, for the purpose of seating the bearing 31. It will be understood that in the event the annulus 33 is formed integral with the shaft 28, the other end of the shaft will be machined small enough to permit the sliding gears, hereinafter referred to, to be assembled from that end. The annular bearing 29 is retained in place by a ring 34 threaded into the member 14 and a thrust bearing 35 is also retained thereby for the purpose of taking the end thrust of the pinion 27. It will thus be seen that the driven shaft 28 upon which the driving pinion 27 is mounted, is supported in comparatively widely separated bearings of ample size directly in the walls of the casing 10, the bearings resting in the steel supporting members 13, 14, which are machined true in the casing. Perfect alinement is thereby secured and the least amount of play possible is allowed the pinion 27.

Between its supporting bearings the shaft 28 is preferably squared or otherwise provided with key-ways and upon this part of the shaft is a shiftable member 36 having a squared opening whereby it is caused to turn with the shaft 28 and permitted to slide thereon. On the member 36 are mounted gears 37 and 38 which are adapted to mesh respectively and at different times with gears 39 and 40 on the countershaft 41. The member 36 is also provided on its forward end with jaws 42 which are adapted to extend through openings 43 formed in line therewith in the web of the annulus 33. The countershaft 41 is mounted in bearings 44 and 45 in the other openings of the supporting members 13, 14, and on the forward end of this shaft which projects through the wall 11 is a gear 46 which meshes constantly with a gear 47 on the driving shaft 48. The countershaft is retained against endwise movement by securing the inner race of the bearing 44 between a flange 49 and the gear 46 on the countershaft and securing the outer race between a shoulder on the supporting member 13 and a ring 50 threaded into said supporting member. Thus it will be seen that the bearings 44, 45, of the countershaft are also supported directly in the members 13, 14, similar to the method of supporting the shaft 28.

The driving shaft 48 with the universal joint 51 on its forward end is supported in the bearing 19 heretofore referred to and in a bearing 52 in the supporting member 13. As heretofore suggested, this shaft 48 is in direct alinement with the shaft 28, and besides having the gear 47 keyed thereon it is also provided with clutching jaws 53 which are shown extending into an annular recess 54 formed in the annulus 33, thus arranging the jaws adjacent the openings 43 in said annulus. With this arrangement of bearings it will be seen that the driving shaft 48 and the driven shaft 28 are supported independently of each other and the bearings for both shafts are sufficiently separated to insure proper alinement, the bearings for the shaft 48 being mounted in the casing on opposite sides of the constant mesh gear 47, and one of them being between said gear and the clutching jaws 53.

From the above it will be observed that the sliding member 36 may be moved to the left to mesh the gear 38 with the gear 40 whereby the shaft 28 will be driven through gears 47, 46, 40 and 38 at a considerably reduced speed; that the sliding member 36 may be moved to the right to mesh the gear 37 with the gear 39 whereby the shaft 48 will drive the shaft 28 through gears 47, 46, 39 and 37 at a lesser reduced speed; and that the sliding member 36 may be moved farther to the right so that the gears 37 and 38 are out of mesh and the jaws 42 extend through the openings 43 and engage the clutching jaws 53 of the shaft 48 within the bearing 31, whereby the shaft 28 is directly driven by the shaft 48 and the countershaft 41 runs idle. It will be understood that the member 36 may be moved to its various positions by suitable connections, not shown.

A reverse gear 55 is shown in dotted lines and is arranged to be moved to position to simultaneously mesh with the gears 38 and 40 when these gears are in the neutral position shown in the drawing, thereby driving the shaft 28 at a reduced speed in the re-

verse direction from the shaft 48. Connections, not shown, for moving the reverse gear, may be provided.

Having thus described my invention, what I claim is:

1. In a transmission mechanism for motor vehicles, the combination of a casing having transverse end walls and a transverse intermediate wall, alined driving and driven shafts mounted independently in bearings in the end walls and intermediate wall, a countershaft mounted in the casing, gears connecting said shafts and including sliding gears adapted to move into and out of mesh, and means for directly connecting said alined shafts.

2. In a transmission mechanism for motor vehicles, the combination of a casing having transverse end walls and a transverse intermediate wall, alined driving and driven shafts mounted independently in bearings in the end walls and intermediate wall, a counter-shaft mounted in the casing, gears connecting said shafts and including sliding gears adapted to move into and out of mesh, and means shiftable with said sliding gears for directly connecting said alined shafts when said sliding gears are out of mesh.

3. In a transmission mechanism for motor vehicles, the combination of a casing having transverse end walls and a transverse intermediate wall, alined driving and driven shafts mounted independently in bearings in the end walls and intermediate wall, a counter-shaft mounted in the casing, gears connecting said shafts and including sliding gears adapted to move into and out of mesh, and a clutch operated by said sliding gears for connecting said alined shafts for direct drive of one by the other.

4. In a transmission mechanism for motor vehicles, the combination with a driving shaft, an alined driven shaft, a shiftable member on the driven shaft adapted to connect said shafts for direct transmission, a bevel pinion on said driven shaft, and a bevel gear in mesh therewith, of a casing for the gearing, and bearings in the casing for said driven shaft on either side of said shiftable member.

5. In a transmission mechanism for motor vehicles, the combination with a casing, of a driving shaft in said casing adjacent one end thereof, an alined driven shaft, a shiftable member on the driven shaft adapted to connect said shafts for direct transmission, a bevel pinion on said driven shaft, a bevel gear in mesh therewith, and bearings in the casing for said driven shaft on either side of said shiftable member.

6. In a transmission mechanism for motor vehicles, the combination with a casing, of gearing mounted therein comprising a bevel pinion, a bevel gear meshing therewith, a gear shaft upon which said pinion is secured, sliding gears on said gear shaft, a driving shaft in said casing alined with said gear shaft, a direct drive clutch between said shafts and bearings in the casing for said gear shaft on either side of said sliding gears.

7. In a transmission mechanism for motor vehicles, the combination with a driving shaft, an alined driven shaft, means for directly connecting and disconnecting said shafts and a counter shaft, of constantly meshing gears on the driving and counter shafts, a second gear on the countershaft, a sliding gear on the driven shaft adapted to mesh with said second gear, and a bearing at each end of the driven shaft independent of the driving shaft.

8. In a transmission mechanism for motor vehicles, the combination with a driving shaft, an alined driven shaft, means for directly connecting and disconnecting said shafts and a counter shaft, of constantly meshing gears on the driving and counter shafts, a second gear on the counter-shaft, a sliding gear on the driven shaft adapted to mesh with said second gear, and a bearing for the end of the driven shaft adjacent the driving shaft but independent thereof.

9. In a transmission mechanism for motor vehicles, the combination with a casing having separated transverse walls therein, of alined driving and driven shafts, a countershaft, gears on the shafts, bearings in the casing walls supporting both ends of the driven and counter shafts independently of the driving shaft, and means for connecting the alined shafts to drive direct.

10. In a transmission mechanism for motor vehicles, the combination with a casing having transverse walls and an end cover, of change speed gearing in the casing comprising alined driving and driven shafts, gears on said shafts, bearings for said shafts in said casing walls and cover, the bearings of each shaft being mounted in the casing independently of those of the other shaft, and means for connecting the alined shafts to drive direct.

11. In a transmission mechanism for motor vehicles, the combination with a casing having bearing supporting walls, of alined driving and driven shafts and a counter shaft, gears on the shafts, bearings in the casing walls for supporting independently the adjacent ends of the alined shafts, and means for connecting the alined shafts for direct drive from one to the other.

12. In a transmission mechanism for motor vehicles, the combination with a driving shaft, a driven shaft alined therewith, a pair of separated bearings for the driving shaft, and a pair of separated bearings for the driven shaft, one of the bearings of one of said shafts being mounted adjacent, but

independently of, one of the bearings of the other shaft, of a casing, means in the casing for supporting said bearings, and means for connecting the shafts for direct drive.

13. In a transmission mechanism for motor vehicles, the combination with a casing having bearing supporting walls, of alined driving and driven shafts and a counter shaft, gears on the shafts, bearings in the casing walls for directly supporting both ends of the alined shafts, and means for connecting the alined shafts for direct drive from one to the other.

14. In a transmission mechanism for motor vehicles, the combination with a casing having bearing supporting walls, of alined driving and driven shafts and a counter shaft, gears on the shafts, bearings in the casing walls for supporting the remote ends of the alined shafts, bearings for directly and independently supporting the adjacent ends of the alined shafts, and a clutch operating within said latter bearings for directly connecting the alined shafts.

15. In a transmission mechanism for motor vehicles, the combination with a driving shaft, a driven shaft alined therewith, a counter shaft, gears on said shafts, and bearings for said shafts, of a bearing supporting member arranged to independently support one of the bearings for each of said shafts, and means for directly connecting said alined shafts.

16. In a transmission mechanism for motor vehicles, the combination with a driving shaft, a driven shaft alined therewith, a counter shaft, and gears and bearings for said shafts, of a bearing supporting member arranged to support one of the bearings for each of said shafts, another supporting member arranged to support a bearing for the driven shaft and a bearing for the counter shaft, means for directly connecting the alined shafts, and a casing containing said supporting members.

17. In a transmission mechanism for motor vehicles, the combination with a driving shaft having clutching jaws, and a driven shaft alined therewith, a bearing annulus at one end of said driven shaft and having openings longitudinally of the shafts, of a shiftable member keyed to said driven shaft and having jaws adapted to extend through said openings and clutch with said clutching jaws on the driving shaft.

18. In a transmission mechanism for motor vehicles, the combination with a driving shaft having clutching jaws, a pair of separated bearings therefor, a driven shaft alined therewith, an annulus at one end of said driven shaft and having openings longitudinally of the shafts, and a pair of separated bearings for said driven shaft, one of which bearings is seated upon said annulus, of a shiftable member keyed to said driven shaft and having jaws adapted to extend through said openings and clutch with said clutching jaws on the driving shaft.

19. In a transmission mechanism for motor vehicles, the combination with two alined shafts, an annulus on one of said shafts provided with an opening longitudinally of the shafts, and bearings for said shafts including a bearing seated on said annulus, of a shiftable member on one of said shafts having a jaw adapted to extend through said opening, and a jaw on said other shaft adapted to be clutched by said first jaw.

20. In a transmission mechanism for motor vehicles, the combination of a driving shaft, an alined driven shaft, said shafts being arranged with adjacent ends, supporting bearings for each of said shafts, one of said bearings being arranged adjacent said ends, and a direct drive clutch adapted to connect said shafts, said clutch engaging within said adjacent bearing.

21. In a transmission mechanism for motor vehicles, the combination with a casing having bearing supporting walls, of alined driving and driven shafts having adjacent ends, bearings in the casing walls for supporting the adjacent end of one of the alined shafts, a clutch operating within said latter bearings for directly connecting the said alined shafts, and bearings for the adjacent end of the other of said alined shafts.

22. In a transmission mechanism for motor vehicles, the combination with a casing, a driving shaft, an alined driven shaft, means for connecting and disconnecting said shafts, a countershaft and constantly meshing gears on the driving and countershafts, of bearings for said driving shaft mounted in said casing on opposite sides of said constantly meshing gear on said driving shaft, said bearings being mounted independently of said driven shaft, and bearings in the casing for both ends of the driven shaft.

23. In a transmission mechanism for motor vehicles, the combination of a constant-mesh gear shaft, a shaft alined therewith and supported independently thereof, and a countershaft, constant mesh gears on said constant mesh gear shaft and said counter shaft, relatively sliding gears on said alined shaft and said counter shaft, a direct drive clutch for connecting said constant-mesh gear shaft and said alined shaft, and a supporting bearing for said contant mesh-gear shaft between its constant mesh gear and said clutch.

24. In a transmission mechanism for motor vehicles, the combination of a constant-mesh gear shaft, a shaft alined therewith and supported independently thereof, and a countershaft, constant mesh gears on said constant-mesh gear shaft and said counter shaft, relatively sliding gears on said alined

shaft and said counter shaft, a direct drive clutch for connecting said constant-mesh gear shaft and said alined shaft, and a supporting bearing for said constant-mesh gear shaft on either side of its constant mesh gear.

In testimony whereof I affix my signature in presence of two witnesses.

ALLEN LOOMIS.

Witnesses:

GRACE G. LOOMIS,

EDITH HECKMANN.

Copies of this patent may be obtained for five cents each, by addressing the "Commissioner of Patents, Washington, D. C."

R. HUFF.

MOTOR VEHICLE.

APPLICATION FILED NOV. 18, 1910.

1,073,073.

Patented Sept. 9, 1913.

3 SHEETS—SHEET 1.

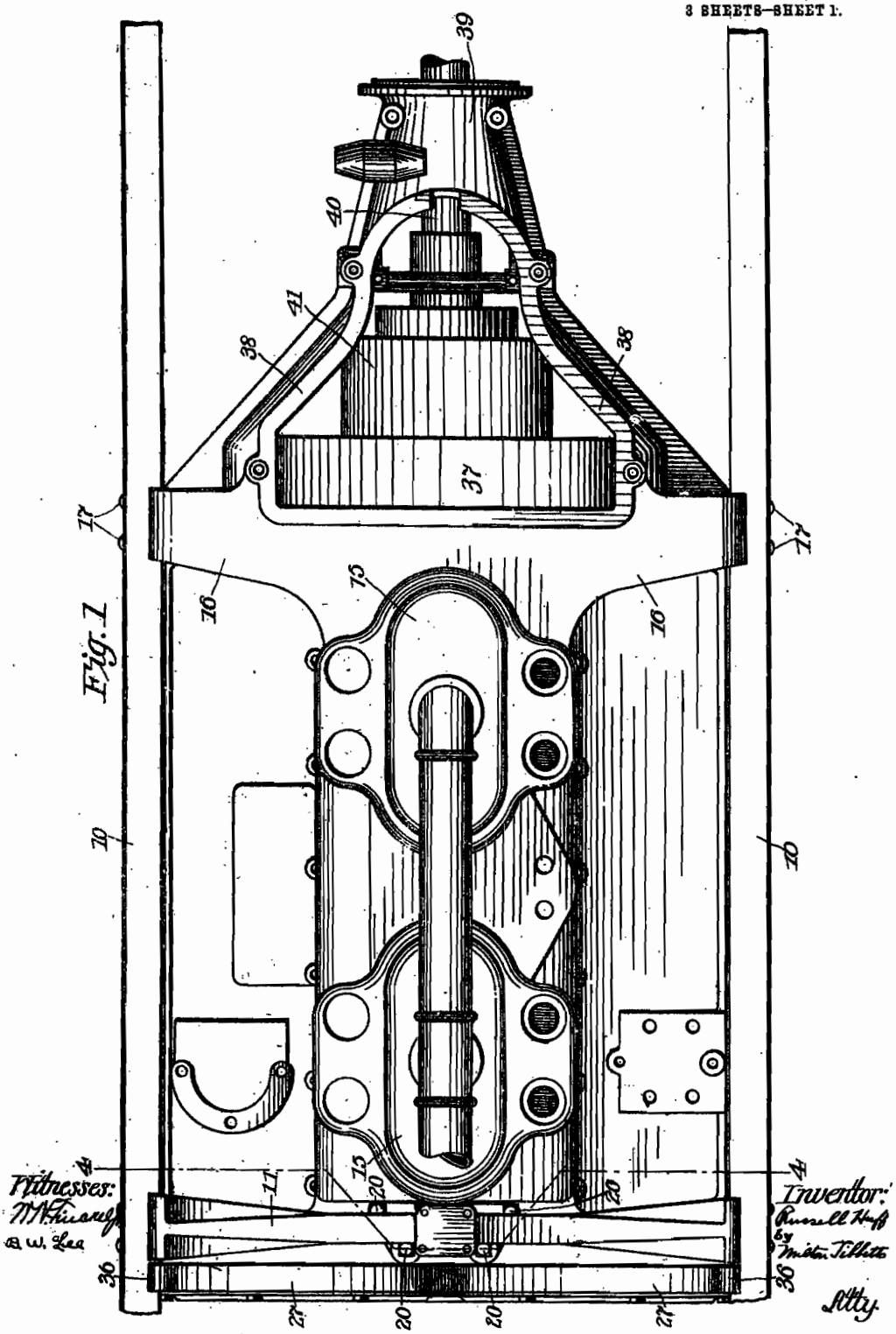

Fig. 1

R. HUFF.

MOTOR VEHICLE.

APPLICATION FILED NOV. 18, 1910.

1,073,073.

Patented Sept. 9, 1913.

3 SHEETS—SHEET 2.

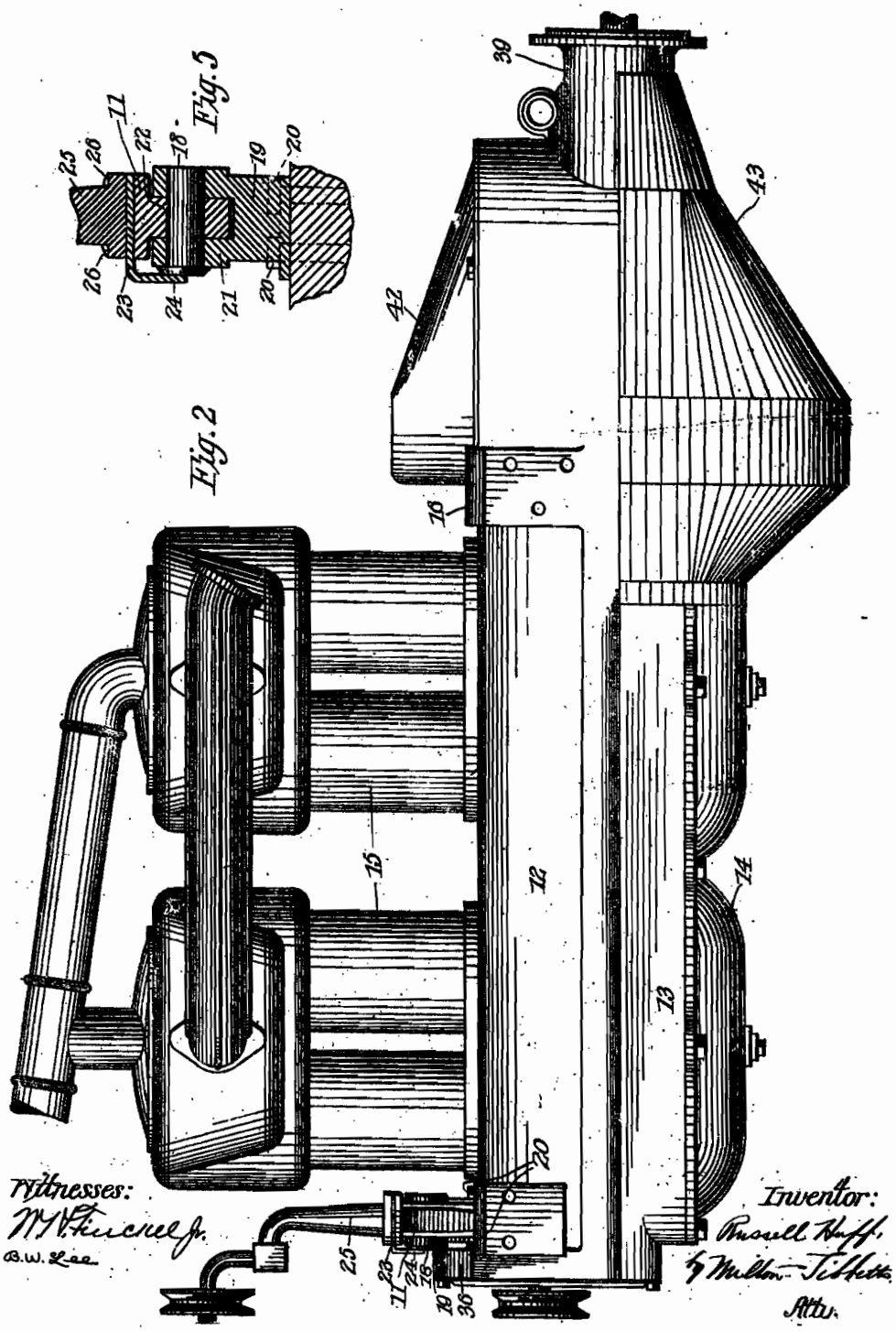

R. HUFF.

MOTOR VEHICLE.

APPLICATION FILED NOV. 18, 1910.

1,073,073. Patented Sept. 9, 1913.

3 SHEETS—SHEET 3.

Fig. 3

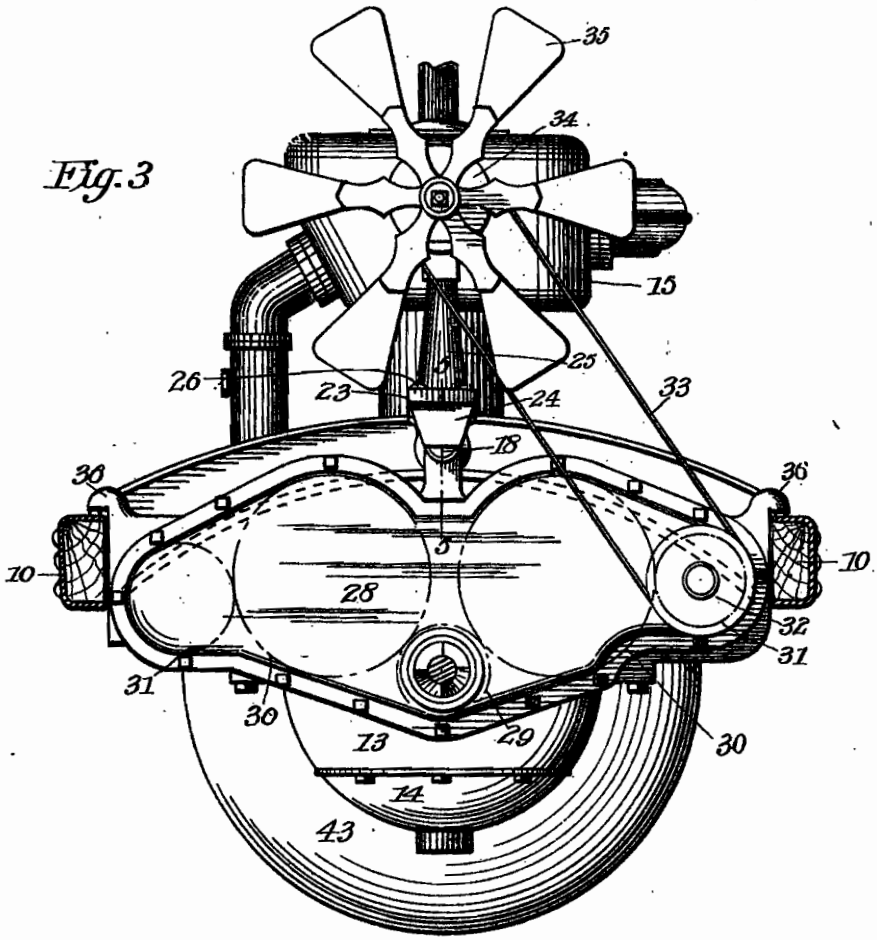

Fig. 4

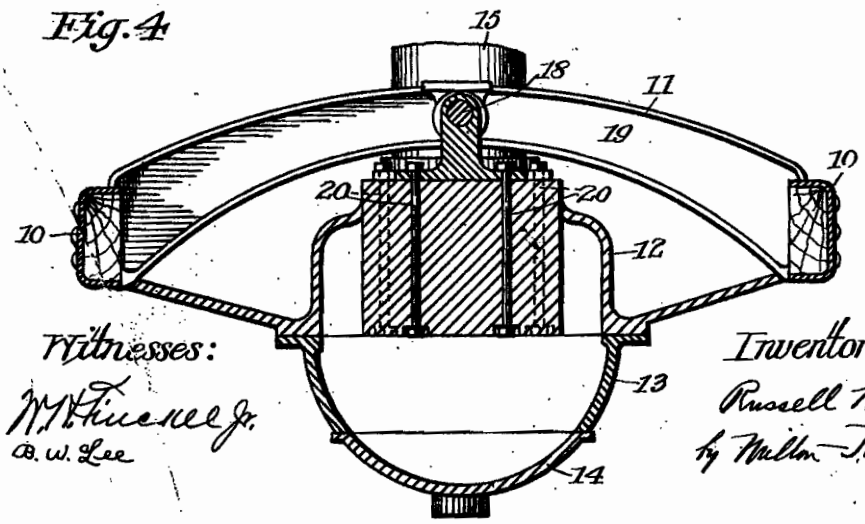

Witnesses:

W. H. Finckel Jr.

B. W. Lee

Inventor:

Russell Huff,

by Milton Tibbitts,

Atty.

3 POW ENG

UNITED STATES PATENT OFFICE.

RUSSELL HUFF, OF DETROIT, MICHIGAN, ASSIGNOR TO PACKARD MOTOR CAR COMPANY, OF DETROIT, MICHIGAN, A CORPORATION OF MICHIGAN.

MOTOR-VEHICLE.

1,073,073. Specification of Letters Patent. Patented Sept. 9, 1913.

Application filed November 18, 1910. Serial No. 593,036.

To all whom it may concern:

Be it known that I, RUSSELL HUFF, a citizen of the United States, and resident of Detroit, Wayne county, State of Michigan, have invented certain new and useful Improvements in Motor-Vehicles, of which the following is a specification.

This invention relates to motor vehicles and particularly to the motor and clutch thereof and their means of support on the frame of the vehicle.

One of the objects of the invention is to support the motor and clutch on the vehicle frame rigidly at two points and by a pivotal connection at a third point, the latter point preferably being at the front of the motor, thus permitting a slight warping of the front end of the frame without seriously affecting the alinement of the motor and its crank shaft.

Other objects will appear from the following specification and claims taken in connection with the drawings which form a part of the specification, and in which—

Figure 1 is a plan view of a portion of a vehicle frame with a motor and clutch supported thereon in conformity with the present invention; Fig. 2 is a side elevation of the motor and clutch shown in Fig. 1 with the side members of the frame removed; Fig. 3 is a front view of the motor with the side members of the vehicle frame in section; Fig. 4 is a vertical section approximately on the line 4—4 of Fig. 1 except that the cross beam is shown in full; and Fig. 5 is a fragmentary vertical section on the line 5—5 of Fig. 3.

In the drawings, 10 represents the two side members of the motor vehicle frame and 11 is a cross beam resting on and secured to the side members 10 preferably near the front end thereof.

12 represents the motor base and crank case which also comprises the intermediate member 13 and the bottom cover 14. Upon this crank case are supported the motor cylinders 15 and the other parts of the motor, and this motor support has integral arms 16 extending laterally from a point adjacent the rear of the cylinders 15 to the side members 10 of the frame, upon which latter these arms rest and to which they are rigidly secured as by bolts 17.

The forward end of the support 12 is hung from the middle part of the cross beam 11 by a longitudinal pivot pin 18. This connection is made through a bracket 19 secured to the support 12 by four long bolts 20 extending entirely through the upper part of the support as shown particularly in Fig. 4. The pin 18 passes through the ears 21 of the bracket 19 and through the alined opening 22 in the cross beam 11, the pin being retained in place by a plate 23 secured to the cross beam directly above the opening 22 and having a finger 24 in contact with the head of the pin. Preferably a fan bracket 25 is supported on top of this plate 23 and the cross beam as by bolts 2 passing through a flange on the bracket and through the plate and the cross beam.

The forward end of the motor base or crank case is formed with hollow laterally extending arms 27 forming a gear case having a front cover 28 and housing the gear 29 on the crank shaft, the cam shaft gears 30, and the auxiliary gears 31, one of the latter of which drives a fan pulley 32 connected by a belt 33 with a pulley 34 secured to the fan 35 for drawing air through the radiator as is well known. This gear case formed by the hollow arms 27 is provided at the extremities of the arms with lugs 36 which are positioned slightly above the frame members 10 in the normal position of the parts and so arranged that they will rest upon the said frame members 10 and support the crank case in the event of failure of the pivotal connection, and for the further purpose of temporarily supporting the front end of the crank case in assembling the motor and frame. It will be understood that these lugs 36 are sufficiently above the frame members 10 in the normal position of the motor so that they do not contact with the frame in the usual warping of the latter in the ordinary operation of the vehicle.

The motor fly wheel 37 is mounted on the crank shaft slightly beyond the arms 16, and said arms are provided with preferably integral extensions 38 in the form of a yoke meeting to form a bearing at 39 in which one end of the clutch shaft 40 is supported. The clutch 41, of any suitable design, is mounted on this shaft 40 and the fly wheel 37 so that the clutch also is supported wholly by the motor support or crank case 12. A

top cover 42 and a bottom fly wheel cover 43 are properly secured to the support for completely housing in the fly wheel and clutch.

Having thus described my invention, what I claim is:

1. In a motor vehicle, the combination with the side frame members, of a crank case and motor base comprising a support for the motor cylinders and a pair of integral arms adjacent the rear end thereof resting on said frame members, a beam resting on said frame members adjacent the front end of said support, a longitudinal pivotal connection between said support and said beam, and means at the forward end of said support to support the same from said frame in case of failure of said pivotal connection.

2. In a motor vehicle, the combination with the frame comprising side members and a cross beam, of a motor support having a pivotal connection at its forward end with said cross beam and having arms at its rear end resting on said side members, and means adjacent the forward end of said support for supporting the latter from the frame when the pivotal connection is withdrawn or fails.

3. In a motor vehicle, the combination with the frame comprising side members and a cross beam, of a motor support having a pivotal connection at its forward end with said cross beam and having arms at its rear end resting on said side members, and a pair of arms at the forward end of said support adapted to rest upon said side members when the pivotal connection is withdrawn or fails.

4. In a motor vehicle, the combination with the side frame members, of a crank case and motor base comprising a support for the motor cylinders, a pair of arms at one end of said support resting on said frame members, a fly wheel for the motor located beyond said arms, rearward extensions on said arms around said fly wheel and provided with a bearing, a clutch supported in said bearing and in said fly wheel, a beam resting on said frame members adjacent the other end of said support, and a pivotal connection between said beam and said support.

5. In a motor vehicle, the combination with the side frame members, of a crank case and motor base comprising a support for the motor cylinders, a pair of arms at one end of said support resting on said frame members, a fly wheel for the motor located beyond said arms, rearward extensions on said arms around said fly wheel and provided with a bearing, a clutch supported in said bearing and in said fly wheel, a beam resting on said frame members adjacent the other end of said support, and a pivot pin connecting said support to said beam at the middle of the latter.

6. In a motor vehicle, the combination with the side frame members, of a crank case and motor base comprising a support for the motor cylinders, a pair of arms at one end of said support resting on said frame members, a fly wheel for the motor located beyond said arms, rearward extensions on said arms around said fly wheel and provided with a bearing, a clutch supported in said bearing and in said fly wheel, a beam resting on said frame members adjacent the other end of said support, and a pivot pin arranged longitudinally of the motor connecting said beam to said support.

7. In a motor vehicle, the combination with the side frame members and a cross beam resting thereon, of a motor support having a pivotal connection with said cross beam, a fan mounted on said cross beam, a fan pulley driven by the motor, and a belt connection from said fan pulley to said fan for driving the latter.

In testimony whereof I affix my signature in the presence of two witnesses.

RUSSELL HUFF.

Witnesses:
W. H. Fincall, Jr.,
C. I. Dale.

R. HUFF.

HYDROCARBON MOTOR.

APPLICATION FILED DEC. 22, 1910.

1,080,762.

Patented Dec. 9, 1913.

2 SHEETS—SHEET 1.

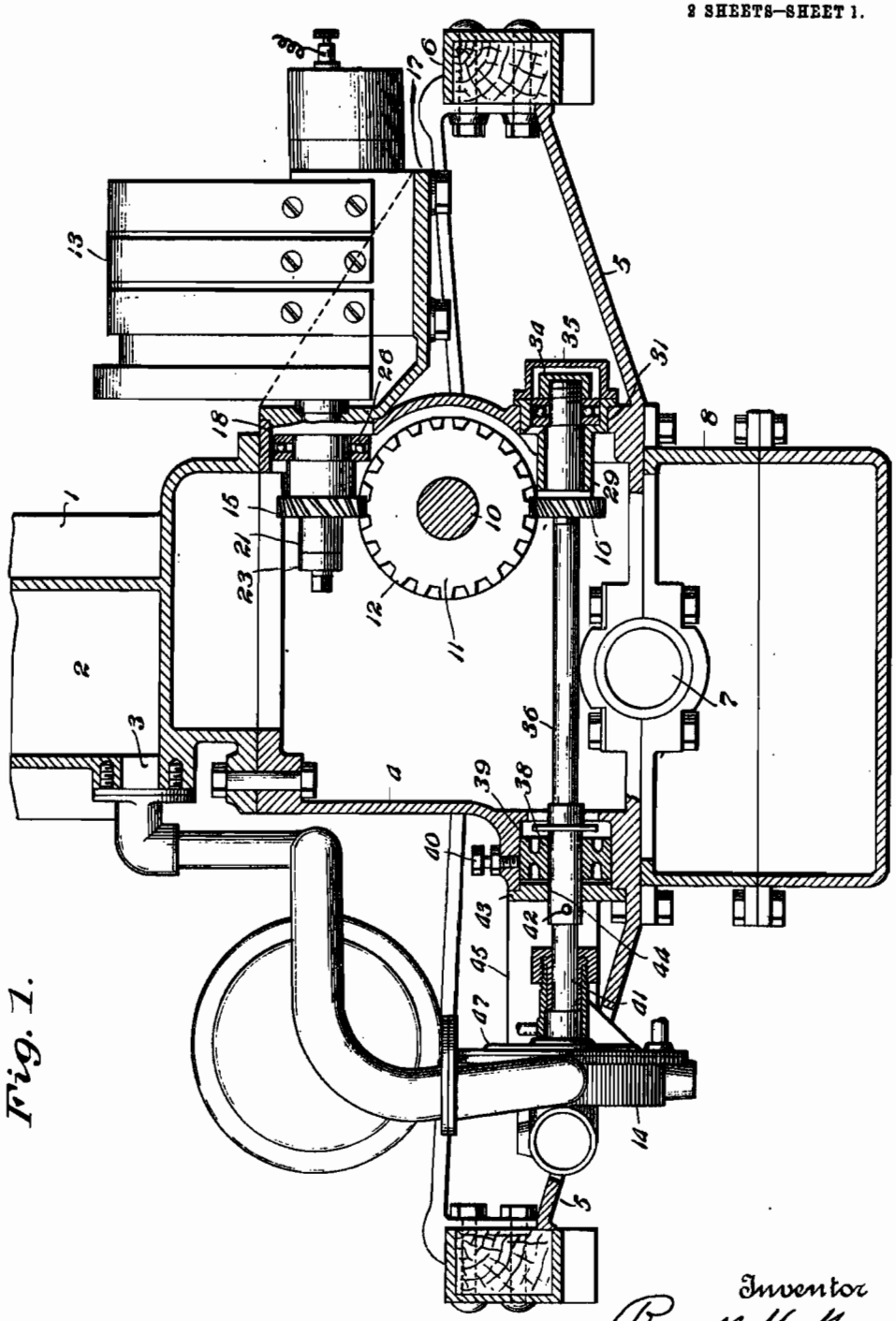

Fig. 1.

Witnesses
J. Adolph Bishop
John A. Donegan

Inventor
Russell Huff
By Foster Freeman Watson & Coit
Attorneys

R. HUFF.

HYDROCARBON MOTOR.

APPLICATION FILED DEC. 22, 1910.

1,080,762.

Patented Dec. 9, 1913.

2 SHEETS—SHEET 2.

Fig. 2.

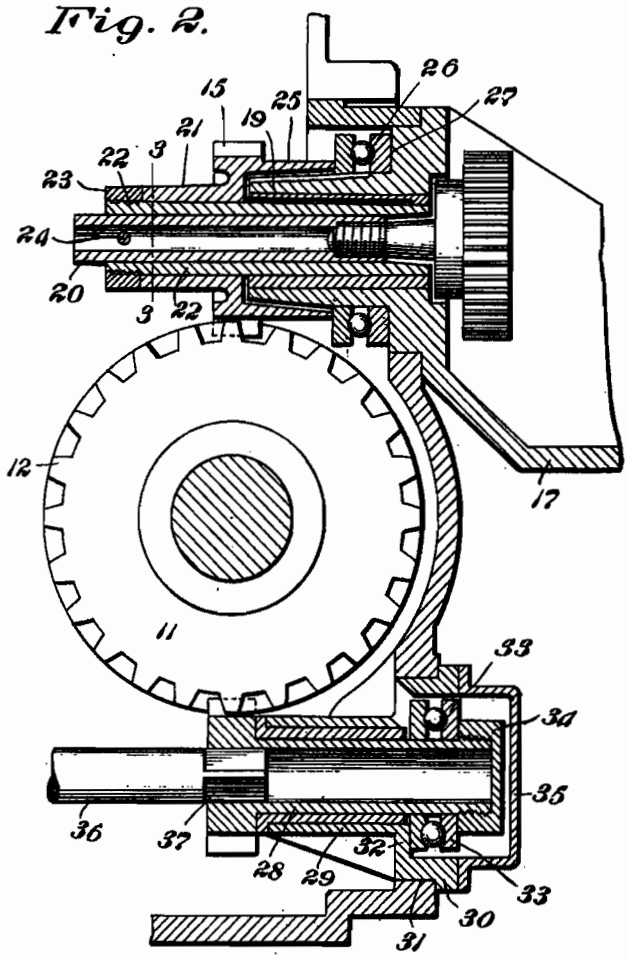

Fig. 3.

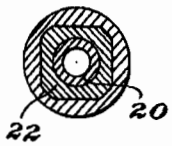

Witnesses

J. Adolph Bishop

John A. Donegan

Inventor

Russell Huff

By Foster Freeman Watson & Coit

Attorneys

UNITED STATES PATENT OFFICE.

RUSSELL HUFF, OF DETROIT, MICHIGAN, ASSIGNOR, BY MESNE ASSIGNMENTS, TO PACKARD MOTOR CAR COMPANY, OF DETROIT, MICHIGAN, A CORPORATION OF MICHIGAN.

HYDROCARBON-MOTOR.

1,080,762. Specification of Letters Patent. Patented Dec. 9, 1913.

Original application filed March 20, 1909, Serial No. 484,833. Divided and this application filed December 22, 1910. Serial No. 598,853.

To all whom it may concern:

Be it known that I, RUSSELL HUFF, a citizen of the United States, and resident of Detroit, in the county of Wayne and State of Michigan, have invented certain new and useful Improvements in Hydrocarbon-Motors, of which the following is a specification.

The present application is a division of my application filed March 20, 1909, Serial No. 484,833, for Letters-Patent for improvements in hydrocarbon motors.

This invention relates to motors for motor vehicles, and particularly to the construction and arrangement of the shafts for driving the pump and magneto in such motors.

The primary object of the invention is the provision of a construction for taking up the end thrust of the magneto and pump shafts whereby displacement of the armature and pump piston will be prevented.

The nature, characteristic features and scope of the invention will be more fully understood from the following description taken in connection with the accompanying drawings forming a part thereof, in which:

Figure 1 is a part sectional view on a transverse plane between two cylinders of a motor vehicle embodying my invention, showing the water jacket in section; Fig. 2 is an enlarged sectional view of the driving gear on the valve shaft and the connected driven shafts and bearings; and Fig. 3 is a section taken on the line 3—3 of Fig. 2.

Referring to the drawings: 1 represents one of the cylinders of a multi-cylinder motor in which the water jacket 2 is common to all cylinders. The water inlet to the jacket is shown at 3. The cylinders 1 are bolted to the top of the supporting section 4 of the crank case, which section has laterally extending arms 5 with ends resting on and bolted to the side members of the vehicle frame 6. The crank shaft bearings 7 are shown suspended between the section 4 and the intermediate section 8 of the crank case, the crank shaft, connecting rods and piston being omitted for clearness. The bottom of the crank case is closed by the cover 9 which forms an oil well for splash lubrication.

Mounted in suitable bearings in the supporting section 4 is a valve operating shaft 10 which is geared by two-to-one gears to the crank shaft in the usual manner. By this means the valve shaft is driven by the crank shaft at one-half the speed thereof, whereby the valves are operated as in the usual four-stroke cycle motor. The shaft 10 is parallel to the crank shaft and is located at one side of the crank case. The gear 11 has on its surface the spiral teeth 12 which are adapted to engage similar spiral teeth on the transversely arranged gears for operating the magneto 13 and pump 14. The gear 15 for the magneto is of such size and the parts are so proportioned that the shaft of the magneto will be driven at twice the speed of the shaft 10 and thus at the same speed as the crank shaft. The gear 16 for driving the pump is preferably made smaller than the gear 15 so that the shaft of the pump will be driven at a greater speed than the magneto shaft and crank shaft, in order to create a proper circulation of water around the cylinders.

The magneto is supported on a bracket 17 which is suitably secured to the supporting section 4 of the crank case and in alinement with an opening 18 formed in the crank case. The bracket is provided with an extended sleeve 19 projecting within the opening 18 and constituting a bearing surrounding the shaft 20 of the magneto. The gear 15 is formed integral with or secured to a short shaft 21 having the bearing sleeve 22 extending within the sleeve 19 and between it and the shaft 20, this sleeve 22 having the outer squared end fitting within the shaft 21 so as to rotate therewith, and having a screw-threaded end adapted to receive a nut 23 for holding the parts together. The sleeve 22 is secured to the shaft 20 by any suitable means such as the pin 24. The shaft 21 has an annular flange 25 surrounding the sleeve 19 and engaging the thrust bearing 26 which is placed against a shoulder 27 on the bracket 17. By this means the end thrust caused by the engagement of the spiral teeth on the gears 11 and 15 is taken up by the bracket 17 through the thrust bearing 26, and is not transmitted to the magneto. The magneto furthermore being carried on the horizontal platform of the bracket 17 has a fixed and definite relation to the bearing formed in the sleeve 19 of the bracket, and therefore the parts may be so adjusted that the shaft of the magneto will accurately fit in the bearing and it is not necessary to have adjustable means for cou-

pling the shaft of the magneto to the shaft which drives it. The driving connection to the shaft of the magneto being made through the squared end of the sleeve 22 permits longitudinal adjustment of the magneto to proper position and there is no thrust on this connection.

The gear 16 for driving the pump is formed with or carried by a short shaft 28 which is mounted to turn in an elongated sleeve 29 of a bracket 30, which bracket is placed in an opening 31 in the supporting section 4 of the crank case, and is secured to that case by any suitable means such as bolts. The sleeve 29 is formed with a shoulder 32, facing outwardly near its end, and a thrust bearing 33 fits against this shoulder and is engaged on the outer side by a cap 34 carried by the outer end of the shaft 28, and thus the end thrust of the shaft 28 caused by the engagement of the inclined or spiral teeth on the gears 11 and 16 is taken up by the bracket 30 through the thrust bearings 33. A cap or cover 35 is placed over the exposed outer end of the shaft 28 and the thrust bearing. Connection between the pump 14 and shaft 28 is established by means of a shaft 36 having a non-cylindrical portion 37 fitting within a similarly shaped socket in the end of the shaft 28, thus forming a slidable driving connection which is sufficiently loose to permit the shaft 36 to bend slightly in relation to the shaft 28, thus furnishing a practical and universal joint between the parts. The opposite end of the shaft 36 is mounted in a bearing 38. The shaft 41 of the pump fits in a socket formed in the end of the shaft 36 and the parts are secured so that they will rotate together by any suitable means, such as a pin 42.

From Fig. 2 it will be observed that the bracket 17, the gear 15, and the parts connecting the gear with the magneto are removable from the crank case without disassembling. It will also be observed that the bracket 30 together with the shaft 28, the gear 16, and the bearing 33 are removable from the crank case without disassembling. This feature is of especial advantage because it permits the parts to be adjusted before they are placed in position on the motor.

Having thus described the invention, what is claimed is:

1. In a motor, the combination with the crank case, of a spiral driving gear therein, brackets secured to said case, parallel shafts mounted to turn in said brackets, spiral gears on said shafts engaging said first mentioned gear, and end thrust bearings for said shafts engaging said brackets, said shafts and bearings being removable from the crank case with said brackets.

2. In a motor, the combination with the crank case, of a spiral driving gear therein, a removable bracket having an elongated sleeve secured in an opening in the wall of said gear case, a shaft in said sleeve, an end thrust bearing between said shaft and bracket, and a spiral gear on said shaft engaging said first mentioned gear, said bracket, the shaft with the gear thereon, and the thrust bearing being removable from the crank case while assembled.

3. In a motor, the combination with a driving shaft having a spiral gear thereon, of a wall adjacent said gear and provided with openings, elongated parallel bearing sleeves carried by said wall in said openings and at the periphery of said gear and on opposite sides thereof, short transverse shafts mounted in said sleeves, gears on said shafts meshing with said first mentioned gear, thrust bearings between said transverse shafts and sleeves, and means at the end of said transverse shafts for making longitudinal sliding connection with alined shafts, said shafts and gears being removable with said sleeves through said openings.

4. In a motor, the combination with a driving shaft having a spiral gear thereon, of a wall adjacent said gear and provided with openings, elongated parallel bearing sleeves carried by said wall in said openings and at the periphery of said gear and on opposite sides thereof, short transverse shafts mounted in said sleeves, gears on said shafts meshing with said first mentioned gear, and thrust bearings between said transverse shafts and sleeves, the said transverse shafts being provided with noncylindrical end sockets at their inner ends and removable with their gears and sleeves through said openings.

5. In a motor, the combination with a driving shaft at one side thereof, of a transverse driven shaft, gear connections between said shafts producing end thrust, a thrust bearing for said driven shaft, a shaft extending to the opposite side of the motor in line with said transverse shaft, and end driving connection between said last mentioned shafts permitting slight universal movement and slight relative longitudinal movement.

6. In a motor, the combination with a driving shaft at one side thereof, of a transverse driven shaft, gear connections between said shafts producing end thrust, a thrust bearing for said driven shaft, a shaft extending to the opposite side of the motor in line with said transverse shaft, one of said shafts being provided with an end socket angular in cross section and the other being provided with a short end portion formed to slidably fit in said socket, thus furnishing a universal joint.

7. In a motor, the combination with the side supports, of a short transverse shaft on

one side between the supports, bearings for maintaining said shaft in position, means for driving said shaft, an auxiliary device on the opposite side, an elongated driving shaft for said device extending across the motor in line with the short shaft, and a driving connection between the ends of said shafts permitting slight relative movement in any direction.

8. In a motor, the combination with the gear case, and side supports therefor, of a short transverse shaft mounted in one side of the case between the supports, bearings for maintaining said shaft in position, means for driving said shaft, an elongated shaft extending across the case and through an opening in said case in line with said short shaft, and a driving connection between the ends of said shafts permitting slight relative movement in any direction.

In testimony whereof I affix my signature in presence of two witnesses.

RUSSELL HUFF.

Witnesses:

W. H. FINCKEL, Jr.,

RICHARD E. MANTON.

475/198

R. HUFF.

TRANSMISSION GEARING FOR MOTOR VEHICLES.

APPLICATION FILED DEC. 31, 1910.

1,033,176. Patented July 23, 1912.

2 SHEETS—SHEET 1.

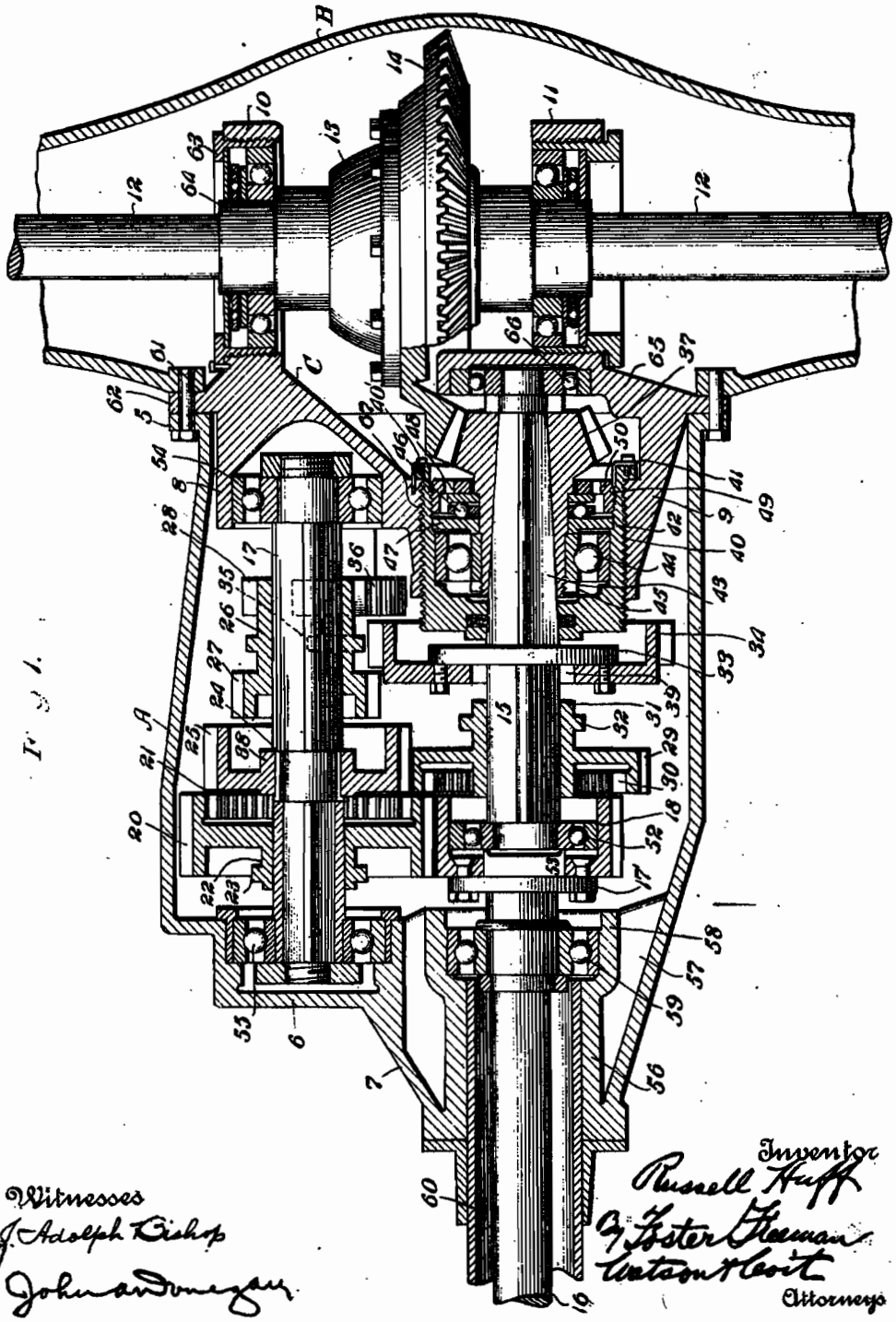

Witnesses
J. Adolph Bishop
John A. Domegan

Inventor
Russell Huff
By Foster Freeman
Watson & Coit
Attorneys

R. HUFF.

TRANSMISSION GEARING FOR MOTOR VEHICLES.

APPLICATION FILED DEC. 31, 1919.

1,033,176. Patented July 23, 1912.

2 SHEETS—SHEET 2.

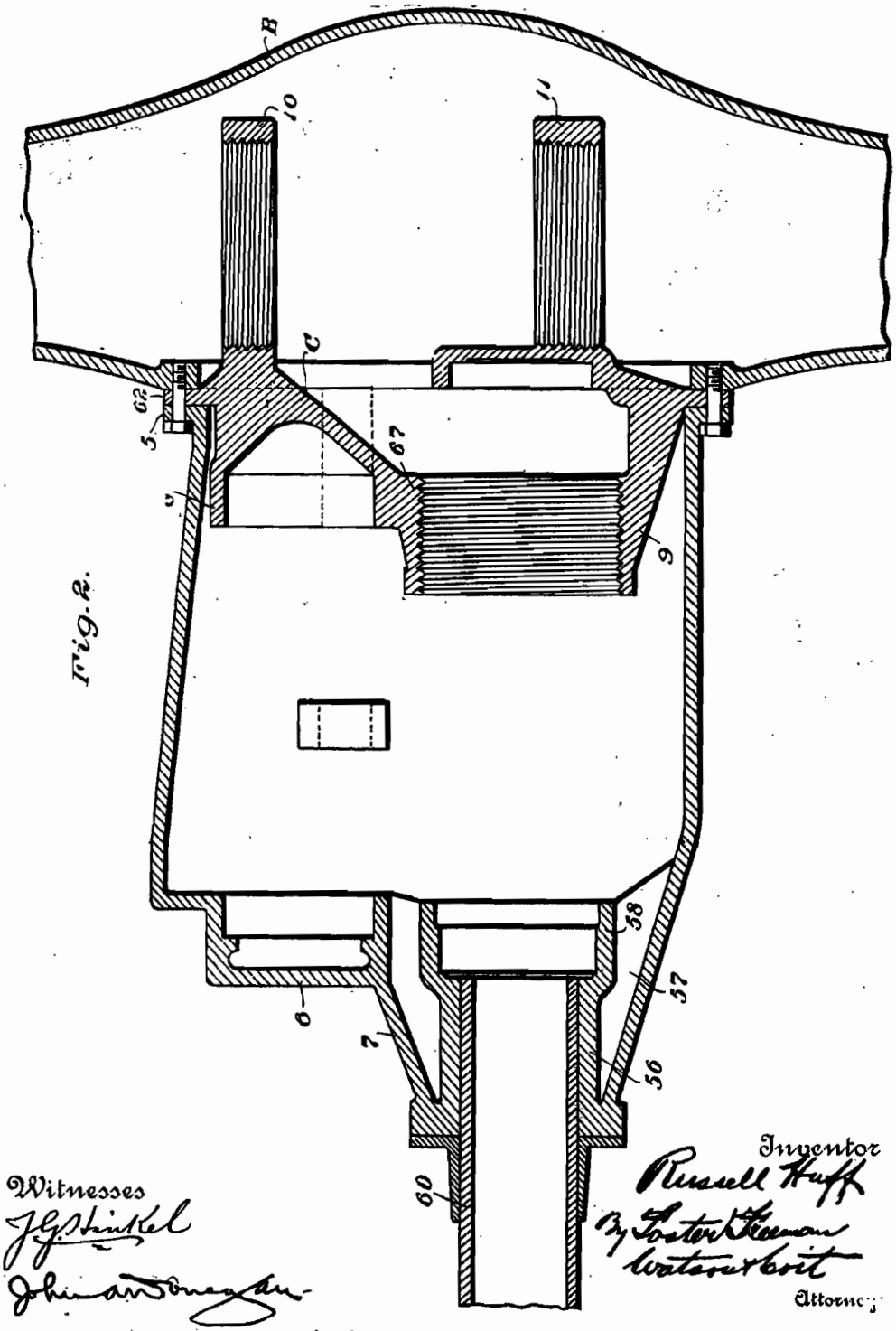

Fig. 2.

Witnesses
J. G. Stinkel
John A. Donegan

Inventor
Russell Huff
By Foster Freeman
Watson & Coit
Attorneys

UNITED STATES PATENT OFFICE.

RUSSELL HUFF, OF DETROIT, MICHIGAN, ASSIGNOR, BY MESNE ASSIGNMENTS, TO PACKARD MOTOR CAR COMPANY, OF DETROIT, MICHIGAN, A CORPORATION OF MICHIGAN.

TRANSMISSION-GEARING FOR MOTOR-VEHICLES.

1,033,176. Specification of Letters Patent. Patented July 23, 1912.

Original application filed May 6, 1909, Serial No. 494,456. Divided and this application filed December 31, 1910. Serial No. 600,349.

To all whom it may concern:

Be it known that I, RUSSELL HUFF, a citizen of the United States, and resident of Detroit, Wayne county, and State of Michigan, have invented certain new and useful Improvements in Transmission-Gearing for Motor-Vehicles, of which the following is a specification.

This invention relates to improvements in transmission gearing for motor vehicles, and this application is a division of a co-pending application, Serial No. 494,456, filed May 6, 1909.

The primary object of the invention is the provision of a three speed transmission gearing of the selective type, certain of the gears of which are always in mesh and so arranged that during the operation of changing speed the gears will engage without noise and the danger of breakage reduced to a minimum.

Another object is the provision of a construction wherein the change speed mechanism will be supported by the rear axle housing, the distance between the end gears of said mechanism corresponding approximately to the width of four gear faces, whereby the flexibility and weight of the parts will be reduced to a minimum.

A still further object is the provision of a relatively short casing for the change speed mechanism, this casing being open at one end and provided with a closure which forms a bearing for the change speed mechanism. With this construction, two advantages are gained, first, the weight of the casing is reduced; and second, access to the speed changing mechanism is simplified.

Other advantages will appear and be more fully understood in the following description, taken in connection with the accompanying drawings, in which—

Figure 1 is a longitudinal sectional view through the change speed and differential mechanism; and Fig. 2 is a horizontal sectional view of the casing.

A designates the change speed casing and B the differential gear casing. The change speed casing is open at one end and at this end is provided with a lateral flange 5. The opposite end of the casing is provided with a pair of forward or outward extensions designated by the numerals 6 and 7, the latter extending beyond the former. A tail piece C nicely fits into the open end of the casing A and on its inner face is provided with bearing lugs 8 and 9 in alinement with the extensions 6 and 7. The opposite face of the tail piece is provided with bearing lugs 10 and 11 which form supports for the rear axles 12 arranged in the casing B. The differential housing 13 receives the inner ends of the axles 12 and is provided with a bevel gear 14.

Arranged in the casing A is a driven shaft 15 in axial alinement with the main driving shaft 16. One end of the main driving shaft connects with the motor (not shown). The counter-shaft 17 is located in the casing A, its opposite ends being supported by the bearing lug 8 and extension 6 in a manner to be presently described. The shaft 16 is provided at its inner end with a flange 17′ to which is bolted a relatively wide gear 18 which meshes with a gear 20 of equal width sliding on the counter shaft 17. The gear 20 is an overhung gear having internal teeth 21 and a sleeve 22, the said sleeve having a collar 23.

A portion of the countershaft 17, upon which the gear 20 is mounted, is non-cylindrical in cross section so that the gear 20 will turn therewith. A portion of the countershaft 17 to the rear of the gear 20 is rounded as shown at 24, and rotatably mounted on the portion 24 is an overhung gear 25 of less diameter than the gear 20 and so positioned that when the gear 20 is moved rearwardly the internal teeth of the latter will mesh with the teeth on the gear wheel 25. Sliding on the countershaft 17 to the rear of the gear wheel 25 is a sleeve 26 provided at its opposite ends with gear wheels 27 and 28 of different diameters. The larger gear wheel 27 lies adjacent to the overhung gear 25 and is of a size to telescope the latter.

The driven shaft 15 is non-cylindrical in contour and sliding on this shaft and turning therewith is an overhung gear 29 located to the rear of the gear 18. The face of the overhung gear 29 is less than the width of the face of the gear 18. The overhung gear 29 meshes with the gear 25, and the said overhung gear is provided with internal teeth 30 to engage the gear 18 when the gear

29 is moved in one direction in the manner to be presently described. The overhung gear 29 is provided on one side with a sleeve 31 having adjacent to its outer end a collar 32. The driven shaft 15 is provided with a flange 33 to which is bolted an overhung gear 34. A sliding sleeve 35 provided with a gear 36 is mounted upon a second countershaft and this sleeve with its gear is connected with the sleeve 26 so as to slide therewith. The gear 36 constantly meshes with the gear 28 at the rear end of the sleeve 26, and is adapted to slide forwardly and mesh with gear 34 for reversing. The rear end of the driven shaft 15 is provided with a bevel pinion 37 which meshes with the bevel gear 14 on the differential housing 13.

As shown in Fig. 1, the gears 18 and 20 are in mesh; so also are the gears 29 and 25, and the gear 34 is positioned between the gears 27 and 28. The gears so arranged will be in neutral position, by virtue of the loose gear 25. Low speed is obtained by shifting 27 into engagement with 34, it being understood that the latter is the largest gear in the casing. When this shift has been made the train will then be 18, 20, 25, 29, 27, and 34. Inasmuch as the gear 25 is loose on the countershaft 17, motion will be imparted to the driven shaft 15 only by the gear 27. The second speed is obtained by shifting 20 into engagement with 25. When this is being done, the gear 29 will move simultaneously with the gear 20 in order to permit the internal teeth of the gear 20 to engage the gear 25. The train will then be 18, 20, 25 and 29. It will be observed that a single shifter may operate both gears 20 and 29, bearings for the shifter being provided by the sleeves 22 and 31, and also by the collars 23 and 32. It will be further observed when the parts are moved from the position shown in Fig. 1, to second speed, that the gears 18 and 20 will never move completely out of mesh, neither will the gears 25 and 29, whereby the shift will be made noiselessly and the danger of the teeth breaking, which sometimes results when the gears are slammed into engagement from one speed to another, will be practically prevented. The third speed or direct drive is obtained by shifting 29 into engagement with 18 during which movement, gear 20 will move simultaneously with gear 29, but in a direction opposite to that described when second speed is to be obtained. The train will then be 18 and 20. Reverse is obtained by sliding the sleeves 26 and 35 so that gear 36 engages with gear 34.

It will be noted that gear 27 is slightly overhung to receive the hub 38 of gear 25, thus permitting a maximum movement for the sleeve 26 with a minimum distance between the gears 27 and 28, and for a similar purpose, the end of the gear 34 which faces the sleeve 31 is provided with an enlarged opening 39 to receive the end of the sleeve 31 when the parts have been shifted for second speed. With this construction, it will be noted that the distance between the attaching webs of the gears 18 and 34 is equal approximately to the width of four gear faces, whereby the total length of the gear casing is reduced to a minimum.

40 is an exteriorly threaded sleeve screwed into the bearing lug 9 of the end piece, C, this sleeve being held in locked position by a locking device 40′. This sleeve is provided on its internal surface with a shoulder 42. The pinion 37 is provided with a shank 43 which surrounds the shaft 15 and extends into the sleeve 42. The shank is provided with a number of shoulders as shown. The sleeve receives the annular roller bearing 44, the outer ring of which tightly fits in the sleeve and the inner ring is secured to the shank 43 by means of the threaded nut 45. The roller thrust bearing 46 is received between the annular rings 47 and 48 and surrounds the shank 43. Ring 47 bears against the shoulder 42 and is restrained thereby. The ring 48 is secured in place by means of an inwardly projecting flange 49 on the threaded sleeve 50. The sleeve 50 is held in adjusted position by means of the locking device 41. The construction of the sleeve 43 and its bearings are such that the thrust of the pinion 37 on the shaft 15 is received in both directions through the roller bearings 46.

The gear 18 has on its interior surface the roller bearing 52 for one end of the shaft 15, and this roller bearing bears against a lug 53 on the flange 17′. The shaft 17 is supported in roller bearing 54 in the lug 8 of the tail piece C, the opposite end of the shaft being supported by roller bearing 55 in the extension 6. The extension 7 of the casing A is provided with an inwardly projecting sleeve 56, webs 57 connecting this sleeve with the extension 7. The sleeve 56 is provided with an enlarged portion 58 to receive the roller bearing 59 which supports one end of the shaft 16. The casing 60 extends into the sleeve 56. This casing surrounds the shaft 16 and is flexibly connected at one end to the frame of the vehicle (not shown) and acts as a torsion rod for the rear axle casing and a housing for the shaft 16.

Referring now to Fig. 1, it will be seen that the casings A and B, are connected by bolts 61 which pass through the flange 5 of the casing A and also through a flange 62 on the end piece C. The bearing lugs 10 and 11 of the end piece C receive the bearing sleeves 63 for the hubs 64 of the differential housing. The outer end of the bearing lug 9 is provided with a lug 65 for sup-

porting the roller bearing 66 for the driven shaft.

The term roller bearing as used in the specification and claims is used in its broadest sense, that is as a generic term including both ball and cylinder anti-friction bearings.

With this construction, it will be manifest when the end piece C is removed, all mechanism can be removed at the end of the casing A. It will be seen that the sleeve 40 is of greater diameter than the pinion 37 so that when the locking device 67 is loosened, the sleeve and its attached parts may be removed as a unit, or if desired, the end piece C with all the parts attached thereto may be removed by removing the bolts 61.

Having thus described the invention, what is claimed is:

1. In transmission gearing, in combination, a shaft, intermediate and opposite end gears arranged on said shaft, said intermediate gear being fixed against axial movement and adapted to telescope within one of said end gears, and the other end gear being adapted to telescope within said intermediate gear.

2. In transmission gearing, in combination, parallel shafts, a gear fixed on one of said shafts, a gear rotatably mounted on the other of said shafts, and internally toothed overhung gears splined on both of said shafts to receive the fixed and rotatable gears.

3. In transmission gearing, in combination, parallel shafts, a gear fixed on one of said shafts, a gear rotatably mounted on the other of said shafts, internally toothed overhung gears splined on both of said shafts to simultaneously receive the fixed and rotatable gears.

4. In transmission gearing, in combination, drive, driven, and counter-shafts, a drive gear fixed on the drive shaft, a gear slidingly mounted on the counter-shaft and meshing with the drive gear, a gear slidingly mounted on the driven shaft, and a gear rotatably mounted on the counter-shaft and meshing with the gear on the driven shaft, the said sliding gears being movable into loose engagement with each other without disengaging from said fixed and rotatably mounted gears.

5. In transmission gearing, in combination, drive, driven, and counter-shafts, a drive gear fixed on the drive shaft, a gear slidingly mounted on the counter-shaft and meshing with the drive gear, a gear slidingly mounted on the driven shaft, and a gear rotatably mounted on the counter-shaft and meshing with the gear on the driven shaft, the sliding gear on the counter-shaft being adapted to positively engage the said rotatably mounted gear and loosely engage the sliding gear on the driven shaft without disengaging from the fixed gear on the drive shaft.

6. The combination with the two alined shafts and the countershaft parallel therewith, of a gear on each of said alined shafts and two gears on said countershaft respectively in mesh with the gears on the alined shafts, means for clutching together and unclutching the gears on the alined shafts, and means for clutching together and unclutching the gears on the countershaft.

7. The combination with the two alined shafts and a countershaft parallel therewith, of a gear on each of said alined shafts and two gears on said countershaft respectively in mesh with the gears on the alined shafts, means for clutching together and unclutching the gears on the alined shafts, and means for clutching together and unclutching the gears on the countershaft without moving any of the gears out of mesh.

8. The combination with alined shafts and a countershaft, of a gear on each of said alined shafts adapted to be brought into clutching relation one with the other whereby one shaft may be directly driven by the other, a gear rotatably mounted on said countershaft and in mesh with one of the gears on the alined shafts, and a sliding gear mounted to turn with said countershaft and adapted to be in constant mesh with the other gear on said alined shafts and to be moved into clutching engagement with the rotatably mounted gear on the countershaft.

9. The combination with alined shafts and a countershaft, of a pair of gears on the alined shafts one of which is slidable and adapted when moved in one direction to be brought into clutching engagement with the other of said gears, and a pair of gears on the countershaft respectively in mesh with the gears on the alined shafts, one of said latter pair of gears being movable in the other direction to effect a clutching engagement with its companion gear.

10. In transmission gearing, the combination with two alined shafts, a parallel countershaft and a parallel reverse shaft, of gears and clutches on said shafts arranged to transmit rotary motion from one alined shaft to the other at three different forward and one reverse speeds and including four longitudinally sliding gears two of which are adapted to be moved from their neutral positions in either direction to obtain two of said speeds and the other two of which gears are adapted to be simultaneously moved from their neutral positions in either direction to obtain the other two speeds.

11. The combination with a driving shaft, a driven shaft, alined therewith, and a parallel countershaft, of a gear fast on the driving shaft, a sliding spur gear on the driven shaft having teeth adapted to engage

coöperating teeth on said driving gear, and gears on said countershaft in constant mesh respectively with the driving gear and spur gear.

12. In transmission gearing, the combination with change speed and differential mechanism; of a casing open at one end and inclosing said change speed mechanism, an end piece forming a closure for the open end of the casing and detachably secured thereto, said end piece having on one face thereof inwardly extending bearings for the change speed mechanism and further having on the opposite face outwardly extending bearings for the differential mechanism.

13. In gearing, alined shafts, a fixed gear on each of said shafts, and sliding means coöperating with said gears for obtaining various speeds, the distance between the remote sides of said gears being approximately equal to the aggregate width of four of the gear faces.

14. In gearing, alined shafts, a fixed gear on each of said shafts, and sliding means coöperating with said gears for obtaining two speeds and a direct drive, the distance between the remote sides of said gears being approximately equal to the aggregate width of four of the gear faces.

15. In gearing, alined shafts, and a countershaft, gears fixed on said alined shafts, and telescoping gears sliding on the countershaft for obtaining various speeds, the distance between the remote sides of the fixed gears on the alined shafts being approximately equal to the aggregate width of four of the gear faces.

In testimony whereof I affix my signature in presence of two witnesses.

RUSSELL HUFF.

Witnesses:
W. H. Finckel, Jr.,
Richard E. Marston.

A. LOOMIS.

IRREVERSIBLE MECHANISM.

APPLICATION FILED DEC. 31, 1910.

1,158,698. Patented Nov. 2, 1915.

Fig. 1

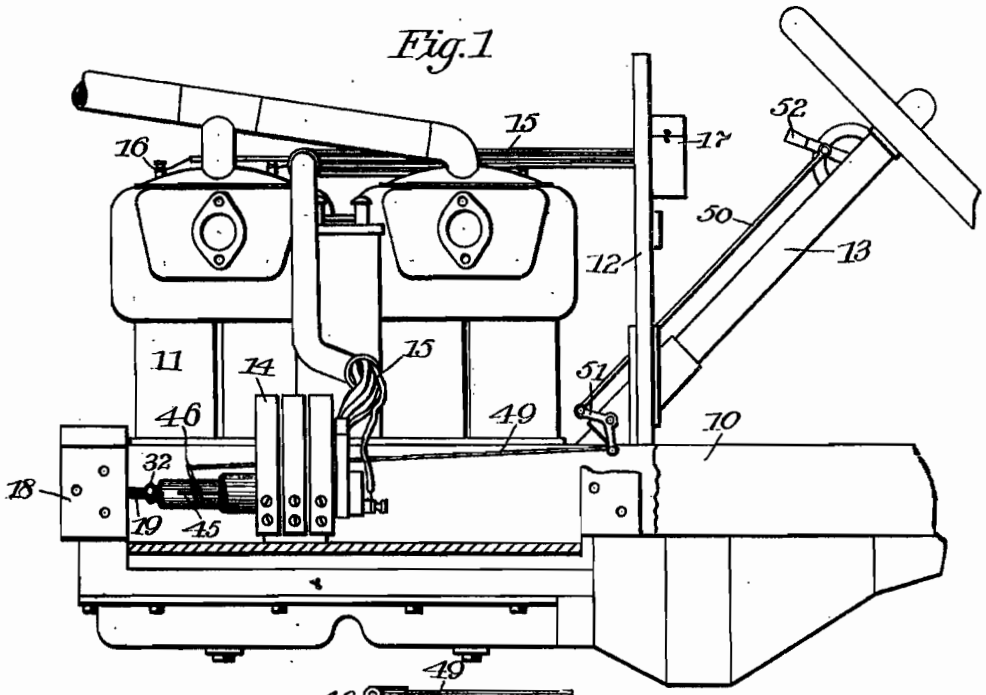

Fig. 2

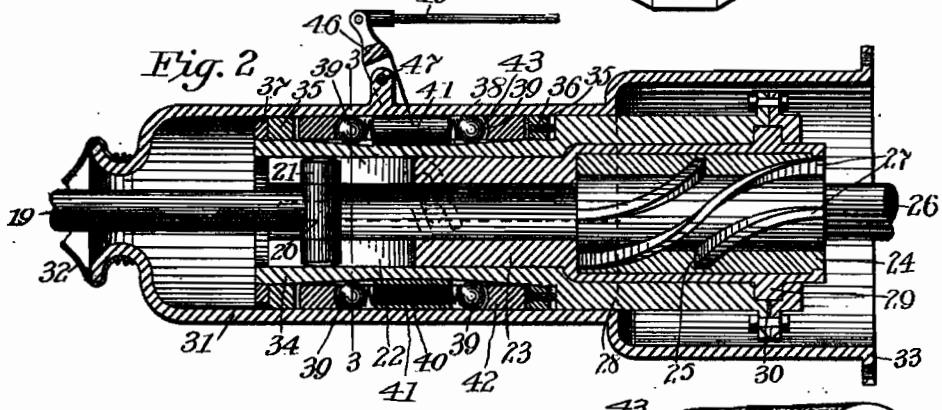

Fig. 4

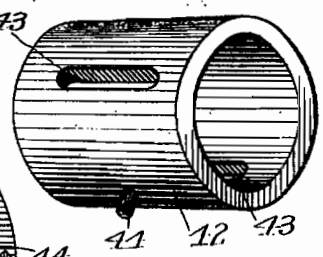

Fig. 3

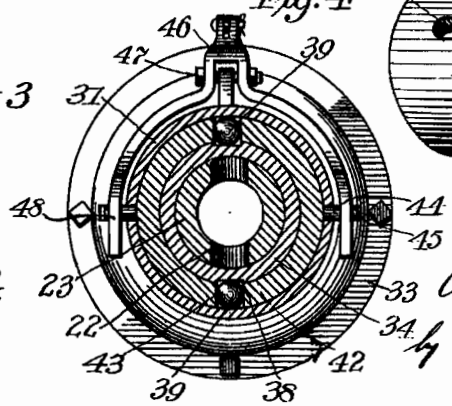

Witnesses
M. N. Finnell Jr.
C. I. Dale

Inventor
Allen Loomis,
by Milton Tibbitts,
Attorney

UNITED STATES PATENT OFFICE.

ALLEN LOOMIS, OF DETROIT, MICHIGAN, ASSIGNOR TO PACKARD MOTOR CAR COMPANY, OF DETROIT, MICHIGAN, A CORPORATION OF MICHIGAN.

IRREVERSIBLE MECHANISM.

1,158,698. Specification of Letters Patent. Patented Nov. 2, 1915.

Application filed December 31, 1910. Serial No. 600,301.

To all whom it may concern:

Be it known that I, ALLEN LOOMIS, a citizen of the United States, and resident of Detroit, Wayne county, State of Michigan, have invented certain new and useful Improvements in Irreversible Mechanism, of which the following is a specification.

This invention relates to irreversible mechanism and more particularly to such mechanism as applied to the spark advance device of a magneto or battery ignition system of an internal combustion motor.

One form of the invention is illustrated in connection with the motor and control mechanism of a motor vehicle.

In a hydrocarbon motor employing a magneto in the ignition system it is customary to support the magneto on some part of the motor frame and connect its armature shaft with one of the motor gears through a coupling in the nature of a universal joint whereby slight disalinement of the magneto shaft and the gear shaft will be readily taken up without strain on the bearings of either shaft. The present invention has combined such a coupling with an irreversible mechanism of the type referred to in the preceding paragraph.

From the foregoing it will be seen that an object of the invention is to bring together in compact form the coupling between the magneto and its driving shaft and the spark advance mechanism of the magneto.

In magneto driving mechanism as heretofore constructed a spiral spark advance device has been used and the shifting member thereof has been operated by a lever mechanism usually extending to the steering wheel when the motor is employed on a motor vehicle, and this mechanism is usually provided with a locking device such as a pawl-and-ratchet by which the shifting member may be maintained in its adjusted position. Since this pawl-and-ratchet mechanism must, in order to be released by the operator, be arranged on the steering column or in a position within easy reach of the operator, all of the play in the various joints between the locking device and the shifting member may be taken up by the latter, and because of the irregular driving action of the magneto a constant vibration and rattle are thereby set up in the spiral advance device.

Another object of the invention, therefore, is to arrange the locking device for the spark advance mechanism at the magneto instead of at some distant point therefrom, and for this purpose a special locking and unlocking mechanism is designed.

The invention as illustrated includes a spiral spark advance device and a universal coupling connecting the magneto driving shaft and the magneto armature shaft, and the shifting member of said device is moved by a reciprocating but non-rotating sleeve which is provided with a locking mechanism which clamps the sleeve to the casing surrounding both the mechanism and the coupling. A manually controlled shifting lever is so connected with the sleeve and locking device that its initial movement unlocks the sleeve and its further movement carries the sleeve with it to the desired position of adjustment where the sleeve is again automatically locked by the locking device. Thus the thrust in either direction is taken on the casing through the locking device and none of it is conveyed through the connecting rods to the controlling lever on the motor vehicle steering post.

Referring to the drawings: Figure 1 is a side elevation of the forward end of a motor vehicle chassis showing the motor, magneto, and operating connections; Fig. 2 is a longitudinal section through the coupling and spark advance mechanism of the magneto illustrated in Fig. 1; Fig. 3 is a section on the line 3—3 of Fig. 2; and Fig. 4 is a perspective view of a detail.

The frame of the motor vehicle is shown at 10; 11 is the motor, 12 the dash, 13 the steering column, 14 the magneto, and 15 the high tension wires leading from the magneto to the spark plugs 16 and coil and switch box 17, as is well understood. A forward arm 18 of the motor forms a casing for the gears which drive the motor cam shafts and the other accessories of the motor. One of these gears is connected to the magneto driving shaft 19 and the free end of this shaft is provided with a yoke 20 having rollers 21 which are adapted to slide in ways 22 in the forward end of a coupling piece 23 thus forming a universal joint connection therewith. The other end of this coupling piece 23 is formed with a soft metal lining 24 in which are spiral grooves 25.

The armature shaft 26 of the magneto is best shown in Fig. 2 and its forward end is provided with spiral ribs 27 conforming with the spiral grooves 25 in the lining 24. It will be seen that a longitudinal movement

of the piece 23, which permits the rollers 21 to slide in the ways 22, will effect an angular adjustment of the armature shaft 26 relative to the driving shaft 19. It will also be seen that the armature shaft 26 will be driven by the shaft 19 through the yoke 20, coupling piece 23 and the spiral connection referred to. Because of the spiral connection it is evident that there will be some end thrust on the coupling piece 23 and if this coupling piece were connected directly to the hand control lever this thrust would be conveyed to said lever through the various links and bell cranks, making it difficult to shift the coupling piece and necessitating a locking device for said control lever.

In the present invention the coupling piece 23 is surrounded by a non-rotating sleeve 28 by which it is shifted longitudinally through the annular flange 29 on the coupling piece and an annular groove 30 in said sleeve. The sleeve 28 is in turn surrounded by a casing 31 which extends forwardly to a point beyond the universal coupling and its forward end is provided with a dust cover 32 which fits around the driving shaft 19 whereby dust is excluded from the casing and oil may be retained therein. The casing 31 may be secured to a non-rotating part of the magneto as by the flange 33, or if preferred, it may be reversed and secured to the motor arm 18.

The forward end 34 of the sleeve 28 is somewhat smaller than the surrounding wall of the casing 31 and this end is provided with spaced abutments 35 which are adjustable to vary the space between them. These abutments may be locked in adjusted position by lock screws 36 and lock nut 37.

This end 34 is also provided with one or more longitudinal grooves 38, which grooves taper from their middle portions toward their ends, and a locking device in the form of a pair of rollers or balls 39 separated by springs 40 is located in each of these grooves. Each of the springs 40 is shown as surrounded by a small tube 41 for retaining it in position and it will be seen that this spring in acting to separate the balls 39 causes them to impinge against the inner wall of the casing 31 and cause a wedging action which resists the longitudinal movement of the sleeve 28 in either direction. This forms an effectual automatic lock for the sleeve 28 and it can only be shifted from this locked position by first relieving the balls 39 from their wedging action between the sleeve and the casing.

Means for releasing the locking device may be provided in the form of a lock releasing sleeve or ring 42 which surrounds the end 34 of the sleeve 28 between the abutments 35 and it is of such length as to have a slight movement longitudinally between said abutments. This ring is formed with a longitudinal slot 43 for each of the grooves 38 and the locking devices above referred to are adapted to be arranged in this slot as shown particularly in Figs. 2 and 3. The slot is of such length as to allow the balls 39 to obtain their full locking action and there is sufficient movement of the ring 42 between the abutments 35 to permit the ring, when moved in either direction, to release one of the locking balls 39 before said ring strikes one of said abutments. It will be understood that the continued movement of the ring after it has released the ball will carry with it the sleeve 28 and the coupling piece 23 and thereby cause an angular adjustment of the armature shaft 26 relative to the driving shaft 19.

The ring 42 may be manually shifted by means of one or more pins 44 extending radially from its sides and operating in longitudinal slots 45 in the reduced forward end of the casing 31, these pins being acted upon by a lever 46 pivoted at 47 to the casing and provided with forked ends 48 extending on both sides of said pin 44.

When adapted to a motor vehicle, the lever 46 may be connected through links 49 and 50 and bell crank 51 to a control lever 52 on the steering post 13 or some other part of the vehicle adjacent the driver's seat.

From the above description it will be seen that the initial movement of the control lever 52 from any of its various positions will, through the linkage, cause a reciprocation of the ring 42 which will release one of the locking balls 39, and a further movement of said control lever 52 will cause the ring 42, through one of the abutments 35, to carry with it the sleeve 29 and the coupling piece 23, whereby an angular adjustment of the armature shaft 26 relative to the driving shaft 19 will be made and the magneto spark will be advanced or retarded relative to the position of the motor crank shaft. As soon as the operator's hand releases the control lever 52 the locking ball 39 which was released by the ring 42 immediately assumes its normal locking position due to the action of the spring 40 and the sleeve 28 is consequently immediately locked against further reciprocating movement until the control lever 52 is again operated.

It will be seen that the sleeve 28 which shifts the coupling piece 23 may be easily adjusted through the control lever 52, but the mechanism through which this adjustment is effected is absolutely irreversible, that is, the sleeve may be moved by the control lever, but the control lever cannot be moved by any amount of thrust on the sleeve.

Having thus described my invention, what I claim is:—

1. The combination with alined driving and driven shafts, of a coupling device

therebetween comprising a shiftable member arranged to vary the angular relation of said shafts, a locking device surrounding said member, and means adapted by a single operative movement to unlock and shift said shiftable member.

2. The combination with alined driving and driven shafts, of a coupling device therebetween comprising a shiftable member arranged to vary the angular relation of said shafts, a locking device surrounding said member, and means connected with both said devices adapted by a single operative movement to unlock and shift said shiftable member.

3. In a device of the class described, the combination with a rotating driving shaft and a driven shaft substantially alined therewith, of means connecting said shafts whereby one may be driven by the other, said means being movable to effect relative angular adjustment of said shafts, a shifting device for adjusting said movable means, a locking device surrounding one of said rotating shafts for holding said movable means in adjusted position, and means whereby the initial movement of said shifting device unlocks said movable means.

4. The combination with a rotating driving shaft, a driven shaft, and means connecting said shafts adapted to be moved longitudinally of one of the shafts to effect angular adjustment of the shafts, of means surrounding said connecting means for locking the latter in various adjusted positions, and operating means comprising a lost motion connection with said connecting means for unlocking and then moving the latter from one position of adjustment to another.

5. In a hydro-carbon motor, the combination with a driving shaft and a magneto, of a spark advance mechanism connecting the driving shaft with the magneto comprising a coupling member, a lever for shifting the coupling member, and means associated with the coupling member for connecting said lever and said coupling member including a checking device to prevent said coupling member from moving the lever while permitting the lever to operate the coupling member.

6. In a hydrocarbon motor, the combination with a driving shaft, a magneto, and a spark advance mechanism connecting the driving shaft with the magneto and including a universal joint, of a lever for shifting the spark advance mechanism, and means associated with the spark advance mechanism for connecting said lever and mechanism including a checking device to prevent said mechanism from moving the lever while permitting the lever to operate the mechanism.

7. The combination with a driving shaft and a magneto, a longitudinally sliding member connecting said shaft and the magneto armature shaft, a sleeve on said member for sliding the latter, means acting directly upon the sleeve for locking said sleeve in various positions of adjustment, and means for unlocking and then moving said sleeve.

8. The combination with a hydrocarbon motor including a magneto driving shaft, of a magneto mounted on the motor and having its armature shaft substantially in alinement with said driving shaft, a device connecting said shafts comprising a spiral advance mechanism and a universal joint, and a casing surrounding said device.

9. In a motor vehicle, the combination with the motor having a magneto driving shaft, a magneto, and connections from said driving shaft to said magneto comprising an irreversible shifting mechanism, of a steering column, a lever on the steering column, and connections from said lever to said irreversible mechanism.

10. In a motor vehicle, the combination with the motor having a magneto driving shaft and a magneto, a spiral thread on the armature shaft of said magneto, a connecting piece having a spiral groove coöperating with said spiral thread and being operatively connected with said driving shaft, a sleeve for shifting said connecting piece to vary the angular relation of said shafts, locking devices to retain said sleeve in adjusted position, and a shifting member adapted to unlock and then move said sleeve in either direction, of an operating lever, and connections from said lever to said shifting member whereby a shifting movement may be communicated from said lever to said connecting piece while the reverse operation is rendered impossible.

11. In a device of the class described, the combination with a rotating driving shaft and a driven shaft substantially alined therewith, a longitudinally sliding member connecting said shafts, a sleeve on said member for sliding the latter, means acting directly upon the sleeve for locking the same in various longitudinal positions, said means also tending to prevent rotation of the sleeve with the shafts, and means for unlocking and then moving said sleeve.

In testimony whereof I affix my signature in the presence of two witnesses.

ALLEN LOOMIS.

Witnesses:
G. E. GODDARD,
J. C. WOODISON.

Copies of this patent may be obtained for five cents each, by addressing the "Commissioner of Patents, Washington, D. C."