PACKARD
Service Counselor
PARTS ★ ACCESSORIES ★ PRODUCT ★ PROFITS
INSTITUTIONAL PROMOTIONAL
APPROVED Packard SERVICE
VOL. 23, NO. 2 FEBRUARY 1, 1949

The New R-11 Overdrive Unit

22nd Series

A new type overdrive assembly, model R-11, is now being used in production to a limited extent. As soon as conveniently possible, the new unit will be installed in all vehicles on which overdrive equipment is specified.

Vehicles equipped with the new type unit may be identified by (1) absence of the overdrive indicator light in the instrument panel, (2) the four-terminal overdrive relay on the dash panel instead of the six-terminal relay formerly used, and (3) the overdrive

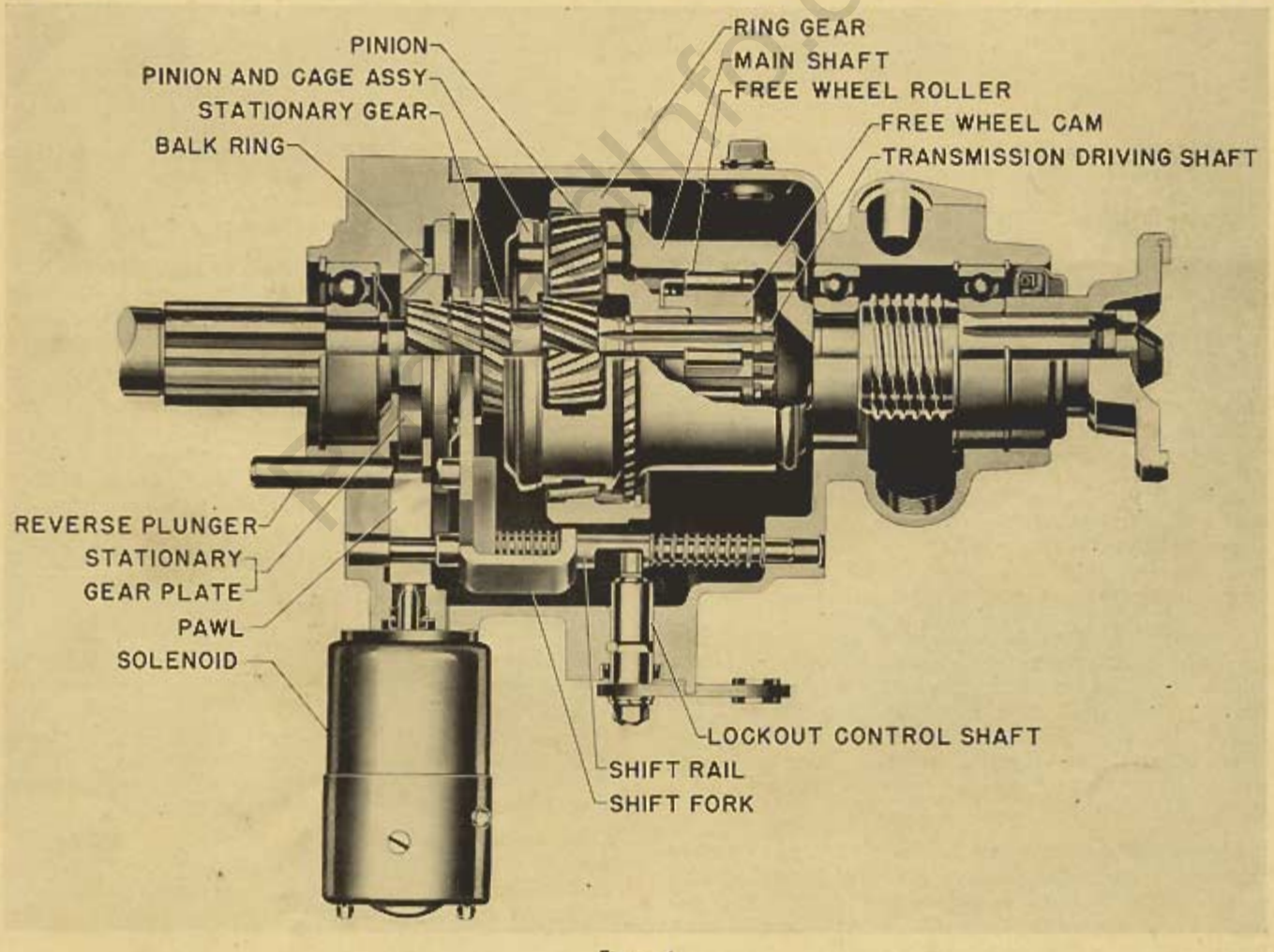

Figure 1

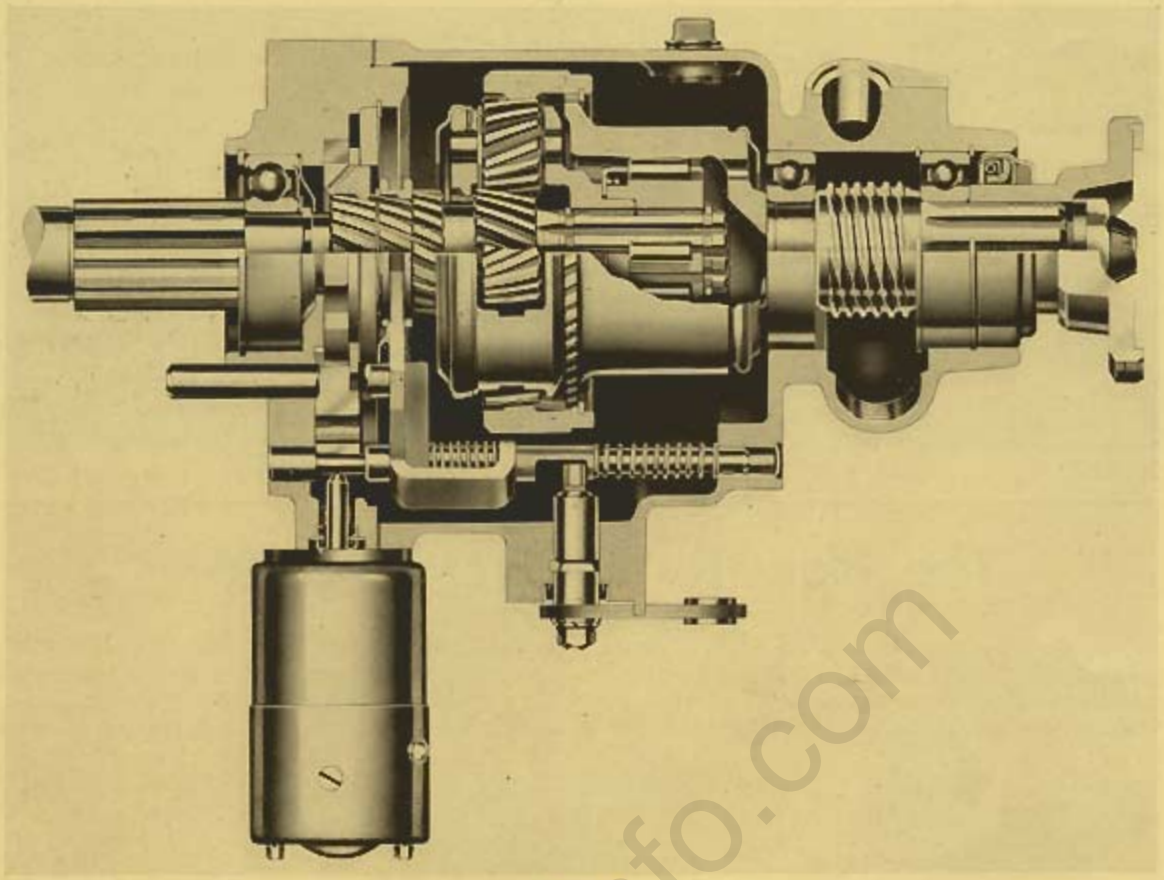

Figure 2

solenoid and the lockout lever located on the left side of the overdrive case instead of on the right.

In the following descriptive paragraphs, the new type unit will be referred to as the R-11 unit while the unit which soon will be discontinued will be referred to as the R-9.

The R-11 overdrive incorporates a planetary gear system similar to that of the R-9 although the two units differ in construction. The most prominent differences between the two units are in the transmission of power through the ring gear and in the overdrive lockout mechanism.

In the R-9 unit, the ring gear is splined to a clutch hub which transmits engine power through a clutch sleeve to the main shaft. In the R-11 overdrive, however, the ring gear is splined to the main shaft thereby transmitting power directly to the main shaft.

Overdrive lockout, in the R-9 unit, is accomplished by locking the overrunning clutch (free wheel cam and main shaft) into a single unit by means of the internally splined clutch sleeve. In the R-11 unit, the clutch sleeve has been eliminated and lockout is accomplished by moving the stationary gear rearward and locking the pinions and the ring gear and main shaft assembly into a single unit.

Figure 1 shows the transmission of engine power through the new R-11 unit when in direct drive with overdrive available or, in other words, with the lockout knob pushed in. You will note that the sliding pawl is in its withdrawn position and the stationary gear and plate are free to rotate. With the gear and plate free to rotate, engine power is transmitted through the transmission driving shaft to the free wheel cam which is splined to the driving shaft. The rollers which ride on the ramps of the cam act as wedges between the cam and the inner race of the main shaft and both the transmission driving shaft and the main shaft rotate at the same speed.

When governed speed is reached, the solenoid becomes energized and will remain so until the car speed drops below governed speed or until the lockout knob is pulled out. At this time the sliding pawl is pushed inward onto its step on the balk ring.

To shift into overdrive, the accelerator pedal is released momentarily allowing reverse torque to turn the balk ring thereby permitting the pawl to enter a slot in the stationary gear plate. When the stationary gear and plate are not permitted to rotate, power is transmitted through the transmission driving shaft to the pinion and cage assembly which is splined to the driving shaft. The pinions now rotate around the stationary gear and cause the ring gear attached to the main shaft to be driven at an increased rate of speed. See figure 2. Since the main shaft rotates faster than the free wheel cam, which is splined to the transmission driving shaft, no wedging action of the rollers can take place and the rollers merely roll on their ramps. The engine and the transmission driving shaft now operate at a slower speed than do the main shaft and propeller shaft and the car is operating in overdrive.

When the lockout knob is pulled out, a cam on the end of the lockout control shaft moves the lockout shift rail and the shift fork rearward. The shift fork in turn moves the stationary gear rearward and the external clutch teeth of the stationary gear engage with the internal clutch teeth of the pinion cage assembly.

Since the stationary gear meshes with the pinions and has now engaged the clutch teeth of the pinion

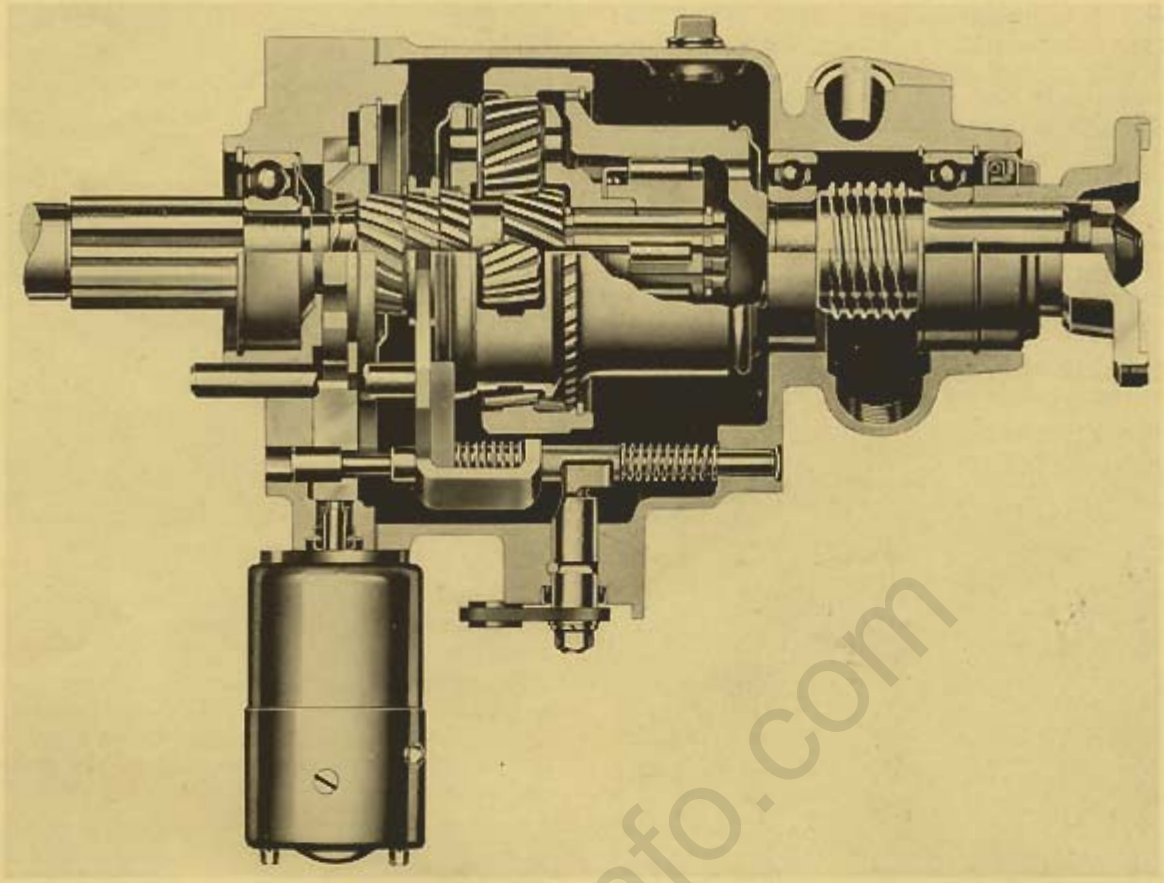

Figure 3

cage, the pinions cannot turn in the cage. Thus the assembly turns as a unit driving the ring gear and main shaft as a unit by means of the teeth of the locked pinions. Power is then transmitted through the transmission main shaft to the stationary gear, to the pinion and cage assembly, and through the pinions to the ring gear and main shaft assembly. See figure 3. The stationary gear also is moved into engagement with the pinion cage by action of the reverse plunger when the transmission is shifted into reverse gear.

DISASSEMBLY

Drain the lubricant from the overdrive case and then disconnect the propeller shaft at the front universal joint, the overdrive governor and solenoid wiring, speedometer cable, and the overdrive lockout cable. Remove the governor using the Overdrive Governor Wrench J3227.

Remove the solenoid retaining screws, rotate the solenoid to the right (clockwise) approximately ¼ turn, and withdraw the solenoid from the adapter.

Drive out the lockout control shaft tapered retaining pin from the bottom as shown in figure 4. Work the lever and shaft outward as far as possible to disengage the cam on the end of the shaft from the shifter rail. See figure 5.

Remove the overdrive case to adapter retaining screws and pull the case and main shaft to the rear and away from the adapter. Do not remove the two screws

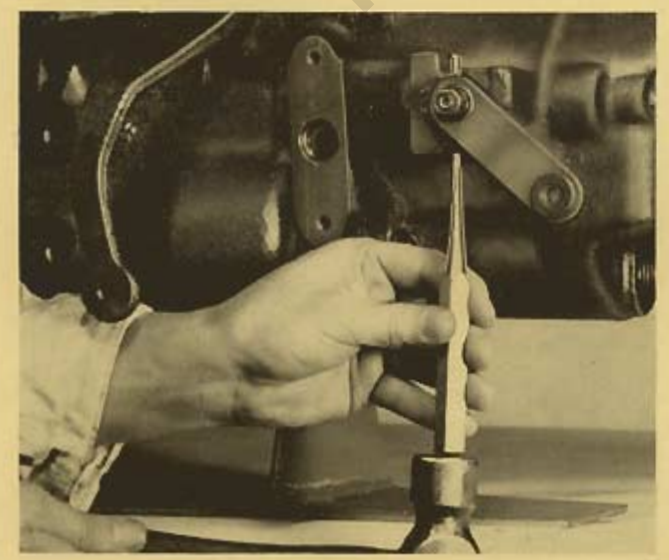

Figure 4

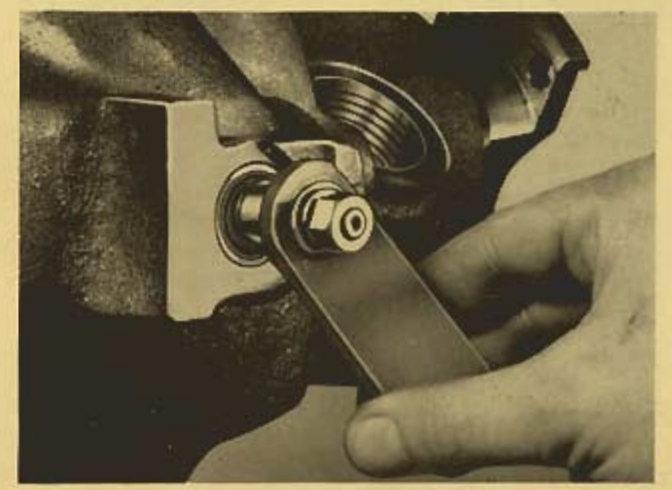

Figure 5

which hold the adapter to the transmission case. When the overdrive case is pulled rearward, the shift rail retractor spring may drop into the case. Some of the free wheel rollers also will drop into the case and some will remain in the cam and roller retainer assembly on the end of the transmission driving shaft. Care should be exercised to prevent losing the retractor spring or any of the 12 rollers.

Remove the universal joint flange retaining nut using the Flange Holding Tool J2659 and the Flange Nut Socket Wrench J2571-A. Remove the flange using the Flange Puller J2576.

Using a soft hammer, tap on the end of the main shaft while pulling it out of the case. See figure 6.

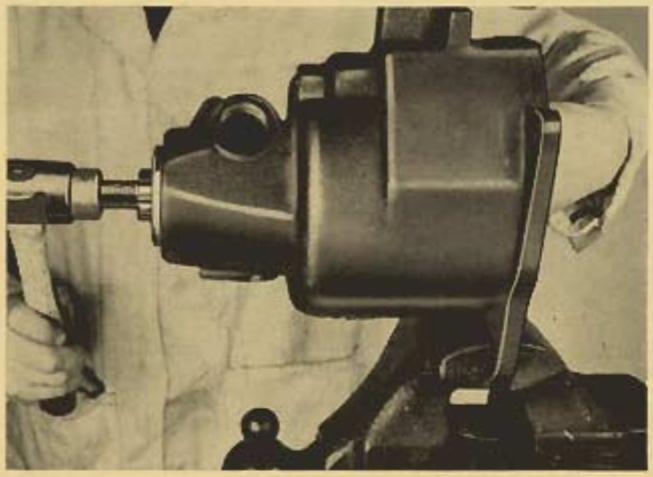

Figure 6

Drive the main shaft front bearing out of the case using a brass drift inserted through the rear bearing and a small hammer as shown in figure 7. Lift the speedometer driving gear out of the case.

Figure 7

Pull the main shaft oil seal. The Axle Shaft Oil Seal Remover J943-B may be used for this operation as shown in figure 8. It may be necessary to grind down the legs of the tool to engage the seal retainer. This seal seldom can be removed without mutilation and a new seal should be installed when the unit is assembled. Remove the rear bearing rear snap ring and tap the rear bearing out of the case.

Remove the lockout control lever retaining nut and the lever and work the lever shaft out from inside the case.

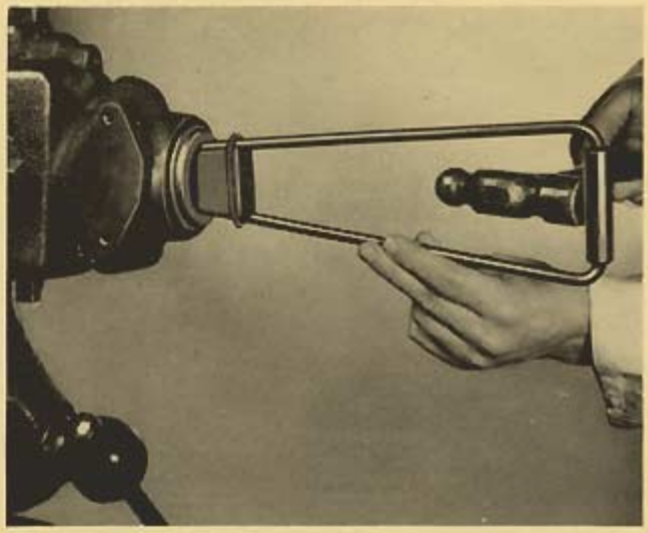

Figure 8

Remove the large snap ring from the ring gear, as shown in figure 9, and separate the ring gear from the main shaft.

Remove the free wheel cam retaining snap ring using the Snap Ring Pliers KMO-410 as shown in figure 10. Slide the roller retainer and cam assembly and the pinion and cage assembly off the transmission driving shaft.

Figure 9

Figure 10

Transmission and Overdrive Type R-11 Parts List

Models 2201-02-06-11-22-26-32-33

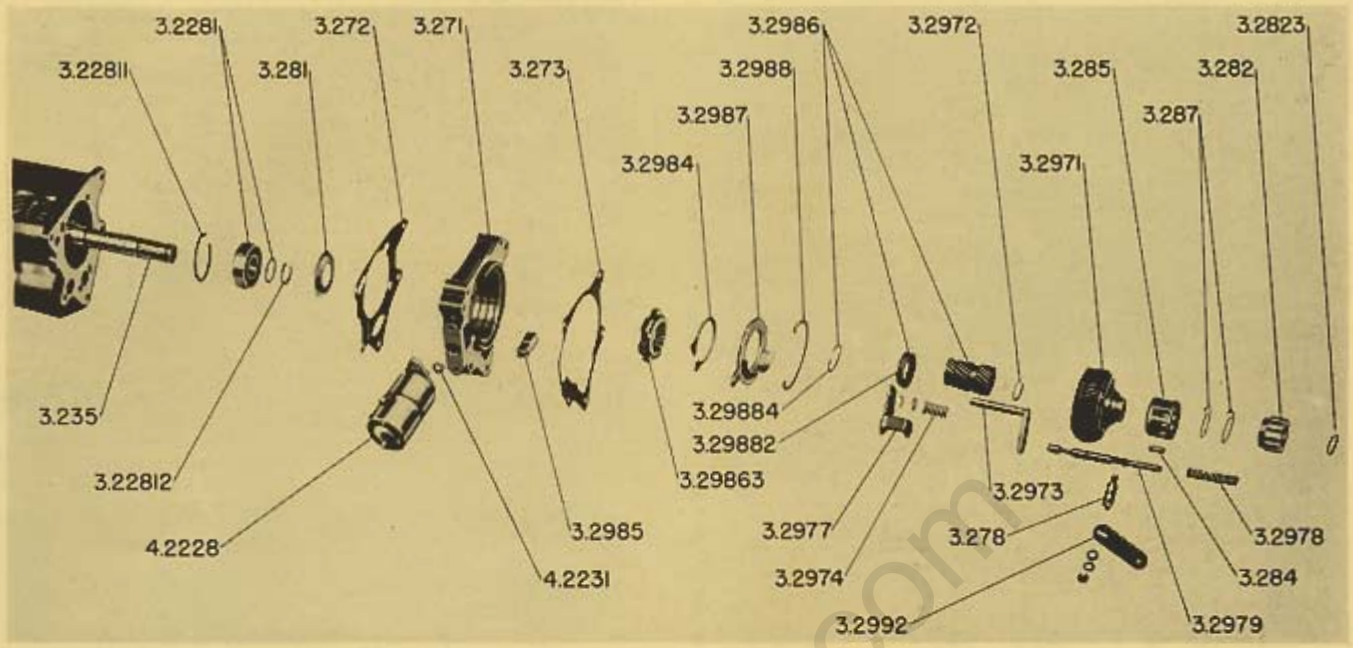

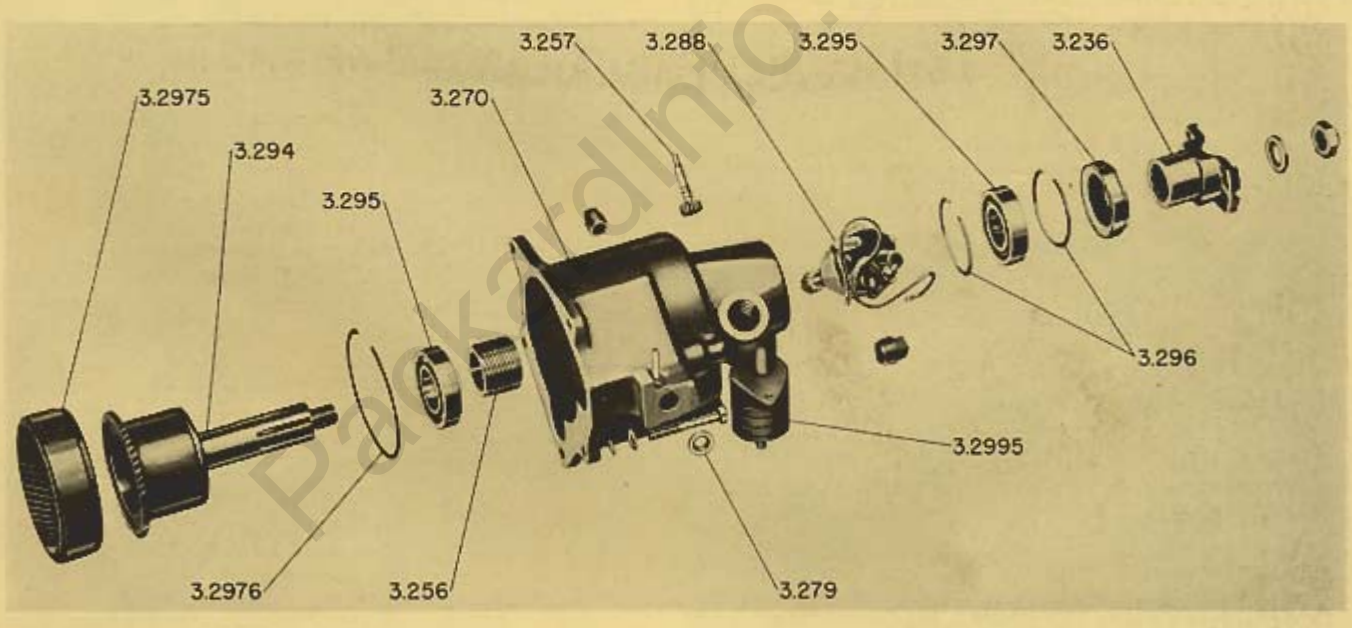

Transmission and Overdrive

Code No.	Part No.	Description	No. Req'd.
3.201		TRANSMISSION AND OVER-DRIVE ASSEMBLY	
	901636	2201-11	1
	901640	2202-22-32	1
	901638	2206-13-26-33	1
3.202	395280	CASE—TRANSMISSION	1
3.203	410538	COVER ASSEMBLY—[redacted] TRANSMISSION [redacted]	1
3.235	410534	*GEAR AND BEARING ASSEMBLY —DRIVING SHAFT, 1ST AND 2ND SPEED	1
3.236		FLANGE—DRIVING SHAFT	
	418272	used with Mechanics joint	1
	418929	used with Spicer joint	1
3.240	418266	SHIFTER FORK & SHOE ASSEMBLY—1ST. & REVERSE GEAR	1
3.249	360313	SPRING—SHIFTER FORKS DETENT BALL	1
3.256	418262	GEAR—SPEEDOMETER DRIVING	1
3.257		PINION AND SHAFT ASSEMBLY	
	412443	18 teeth	
		4.3 to 1 ratio, 2201-11	1
		4.36 to 1 ratio, 2226	1
		4.36 to 1 ratio, Canadian & Export 2222	1
	412442	17 teeth	
		4.1 to 1 ratio, 2201-02-11-32	1
		4.09 to 1 ratio, 2206-33	1
	412444	19 teeth	
		4.36 to 1 ratio, 2222	1

Overdrive

Code No.	Part No.	Description	No. Req'd.
3.270	418423	CASE—OVERDRIVE	1
	418492	Screw 3/8-16 x 2 3/4, drilled head to trans. case	1
	G179848	Screw 3/8-16 x 2 1/4, to trans. case	2
	G179850	Screw 3/8-16 x 2 3/4 to trans. case	1
	G103341	Washer 3/8, to trans. case screw	2
	G103321	Lockwasher 3/8, to trans. case screw	3
	237673	*Gasket, to trans. case drilled hd. screw	2
	120813	Lockwire, to trans. case drilled hd. screw	1
	G215449	Screw 3/8-16 x 1, to adapter	2
	G103321	Lockwasher 3/8, to adapter screw	2
	G103868	Plug 1/2-14 sq. hd. pipe, oil level	1
	338521	Plug 3/4-14 sq. hd. pipe, oil drain	1
	G103890	Plug 1/2 welsh, shift rail hole	1
3.271	418424	ADAPTER—OVERDRIVE	1
3.272	412247	*GASKET—ADAPTER TO TRANSMISSION CASE	1
3.273	418425	*GASKET—OVERDRIVE CASE TO ADAPTER	1
3.278	418402	SHAFT—LOCKOUT CONTROL	1
	G103565	Pin, retaining	1
3.279	418403	OIL SEAL—LOCKOUT CONTROL SHAFT	1
3.281	418426	BAFFLE—DRIVING SHAFT OIL	1
3.282	418427	CAM—FREE WHEEL	1
3.2823		SNAP RING—FREE WHEEL CAM RETAINING	
	338456	*Thin	1
	418437	*Medium	1
	418438	*Thick	1
3.284	347579	ROLLER—FREE WHEEL	12
3.285	347580	RETAINER—FREE WHEEL ROLLER	1
3.287	338449	SPRING—FREE WHEEL ROLLER RETAINER	2
3.288	418447	*GOVERNOR ASSEMBLY	1
3.289	418448	PINION—GOVERNOR ASSEMBLY	1
3.290	347650	SLEEVE—GOVERNOR PINION	1
3.291	347532	SNAP RING—GOVERNOR PINION	1
3.292	418710	SWITCH AND COVER ASSEMBLY—GOVERNOR	1
3.293	355034	GASKET—GOVERNOR SWITCH AND COVER	1
3.294	418415	*SHAFT ASSEMBLY—MAIN	1
3.295	418355	*BEARING—MAIN SHAFT	2
3.296		SNAP RING—MAIN SHAFT BEARING	
	338472	Front	1
	338473	*Medium, Rear	x
	338472	*Thin, Rear	x
	338474	*Thick, Rear	x
	338475	*Extra Thick, Rear	x
3.297	418414	*OIL SEAL—MAIN SHAFT	1
3.2971	418419	*PINION AND CAGE ASSEMBLY	1
3.2972	338456	*SNAP RING—PINION CAGE RETAINING	1
3.2973	418405	PLUNGER—REVERSE LOCKOUT	1
3.2974	418412	SPRING—REVERSE LOCKOUT PLUNGER	1
	418410	"C" Washer	1
	418411	Cup Washer	1
3.2975	338511	*RING GEAR	1
3.2976		SNAP RING—RING GEAR	
	338481	*Medium	x
	338480	*Thin	x
	338482	*Thick	x
3.2977	418408	FORK—SHIFT	1
3.2978	418413	SPRING—SHIFT FORK RETRACTOR	1
3.2979	418409	RAIL-SHIFT	1
3.2984	418434	*RING—GEAR BALK	1
3.2985	418439	PAWL—STATIONARY GEAR	1
3.2986	418430	*GEAR ASSEMBLY—STATIONARY	1
3.29863	418435	PLATE—STATIONARY GEAR	1
3.2987	418440	COVER—STATIONARY GEAR PLATE	1
3.2988		SNAP RING—STATIONARY GEAR PLATE COVER	
	418444	Medium	1
	418443	Thin	x
	418445	Thick	x
3.29882	418432	COLLAR—STATIONARY GEAR SHIFTING	1
3.29884	418433	SNAP RING—STATIONARY GEAR SHIFTING COLLAR	1
3.2989		CABLE ASSEMBLY—LOCKOUT	
	G189134	Screw 1/4-28 x 7/8, to inst. board	2
	G103319	Lockwasher 1/4, to inst. board screw	2
	G117047	Nut 1/4-28, to inst. board screw	2
	302456	"U" bolt 1/4, to cable bracket	1
	G103319	Lockwasher 1/4, "U" bolt	2
	G117047	Nut 1/4-28, "U" bolt	2
	418642	Clip, to cyl. head	1
	418657	Clip, to flywheel housing	1
	G122104	Screw 3/8-16 x 5/8, to cyl. head clip	1
	G138542	Lockwasher 3/8, to cyl. head clip bolt	1
3.299	333722	YOKE END—LOCKOUT CABLE	
	G117047	Nut 1/4-28	1
	G103495	Pin 3/16, Clevis	1
	G107762	Cotter pin 3/32 x 5/8, Clevis Pin	1
3.2990	403043	KNOB—LOCKOUT CABLE	1
3.2991	418641	BRACKET—LOCKOUT CABLE	1
	G100001	Screw 1/4-28 x 3/4, to motor support rear channel bracket	2
	G103319	Lockwasher 1/4, to motor support rear channel bracket screw	2
	G117047	Nut 1/4-28, to motor support rear channel bracket screw	2
3.2992	418401	LEVER AND BUSHING ASSEMBLY —LOCKOUT CONTROL—	1
	G108579	Lockwasher 3/16	1
	G118614	Nut 3/16-18	1
	G103340	Washer 3/16	1
3.2993	333146	BUSHING—LOCKOUT CONTROL LEVER	1
3.2994	333181	SPACER—LOCKOUT CONTROL LEVER BUSHING	1
3.2995	333790	INSULATOR ASSEMBLY—SUPPORT	1
	G216959	Bolt 3/16-18 x 7/8, to case	2
	G216932	Bolt 3/16-18 x 1 1/4, to case	2
	G103320	Lockwasher 3/16, to case bolt	2
	G117048	Nut 3/16-24, to case bolt	2
	126770	Washer 3/8, to insulator to bracket stud	1
	G103321	Lockwasher 3/8, insulator to bracket stud	1
	G117049	Nut 3/8-24, insulator to bracket stud	1
3.2996	335022	SHIM	x
3.2997	335127	SPACER—SUPPORT INSULATOR	1
	395983	SPACER—UPPER	1

Overdrive—Electrical

Code No.	Part No.	Description	No. Req'd.
4.2200	403945	*SWITCH—KICKDOWN	1
	G115552	Lockwasher 3/16	1
	335409	Lock nut 3/16-18	1
4.2208		HARNESS ASSEMBLY—WIRING.	
	416000	front, not used with Electromatic clutch, 2292-95, 2201	1
	416001	front, not used with Electromatic clutch, 2202-11-22-32	1
		used with body, 2293-2201	1
	416002	front, not used with Electromatic clutch, 2206-26-33	1
	240668	Connector, harness to governor	1
4.22085	373608	CLIP—AUXILIARY WIRING HARNESS TO FRAME	2
4.22086	371212	CLIP—AUXILIARY WIRING HARNESS TO TRANS. CASE COVER SCREW	1
4.2216	403940	*RELAY ASSEMBLY—KICKDOWN SWITCH	1
	G142611	Screw No. 10 x 5/8	2
	416160	Spacer, to dash screw	1
4.2223	354820	SWITCH—LOCKOUT	1
4.2224	347642	LOCK—LOCKOUT SWITCH	1
4.2228	403942	*SOLENOID ASSEMBLY	1
	G193989	Screw 3/16-18 x 5/8, to adapter	2
	G114605	Lockwasher 3/16	2
4.22285	382861	POINT SET—SOLENOID	1
4.2231	333833	SEAL—SOLENOID BASE PLUNGER	2

*Indicates parts which should be carried in stock to satisfy service requirements.

Remove the pinion cage assembly retaining snap ring from the driving shaft and mark or tag the ring so that it may be distinguished from the free wheel cam retaining ring when the unit is assembled. In some cases, the two rings may be of the same thickness. In other cases, however, the free wheel cam retaining ring is the thicker of the two since it is available in various thicknesses in order to eliminate any end play of the free wheel cam assembly and the pinion cage assembly on the transmission driving shaft.

Pull the reverse plunger, shift rail, and shift fork assembly out of the adapter while sliding the stationary gear rearward and off the driving shaft. These parts are removed together and in one operation as shown in figure 11.

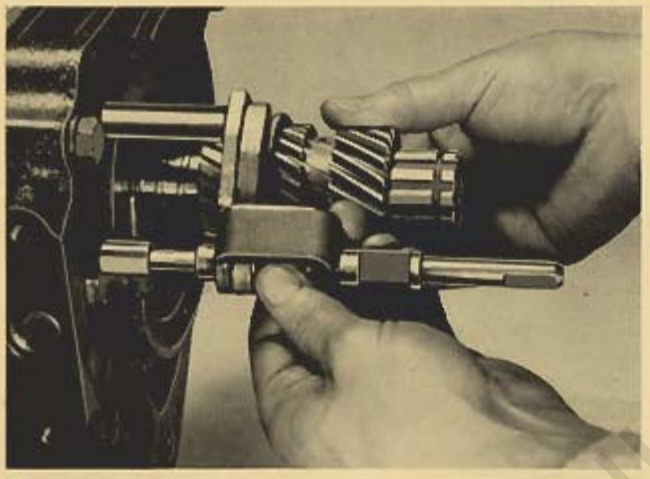

Figure 11

Remove the stationary gear plate cover retaining snap ring and remove the cover, the gear plate, and the sliding pawl.

INSPECTION

Wash all parts thoroughly in a clean container filled with kerosene. It is good practice to first wash the bearings before washing other parts to insure against dirt or grit getting into the bearings.

Inspect all gears for broken, chipped, or scored teeth and all internally and externally splined parts for nicked or burred splines.

Apply a light oil to the bearings and check for roughness or flat spots. Check the free wheel rollers for roughness or flat spots. Replace if necessary.

Examine the oil seals and the surfaces of those parts which are in contact with the seals. Replace where necessary.

Check the tension of the balk ring on the stationary gear plate. The chamfered side of the ring should be toward the slotted hub of the plate. Lubricate the plate and ring with transmission oil and check for a pull of 3½ to 5½ pounds with a scale held parallel with the step of the balk ring as shown in figure 12. The reading on the scale should be taken while turning the balk ring since the initial effort required to start the ring turning may be considerably higher than the specified pull.

Check all retaining snap rings for being sprung or distorted.

Figure 12

ASSEMBLY

Prior to installing gears, bearings, or other moving parts, it is advisable to lubricate all surfaces which are subject to friction with transmission oil. This will provide sufficient lubrication until such time as the lubricating oil reaches these parts after the unit is placed in service.

Place the balk ring on the stationary gear plate with the chamfered side of the ring toward the slotted hub of the plate. Place the gear plate in the adapter and then install the sliding pawl, groove upward, in the adapter.

Install the stationary gear plate cover and the cover retaining ring. Rings are available in thicknesses of .062, .066, and .070 inch. The cover should be held tightly against its seat in the adapter when the ring is in its groove.

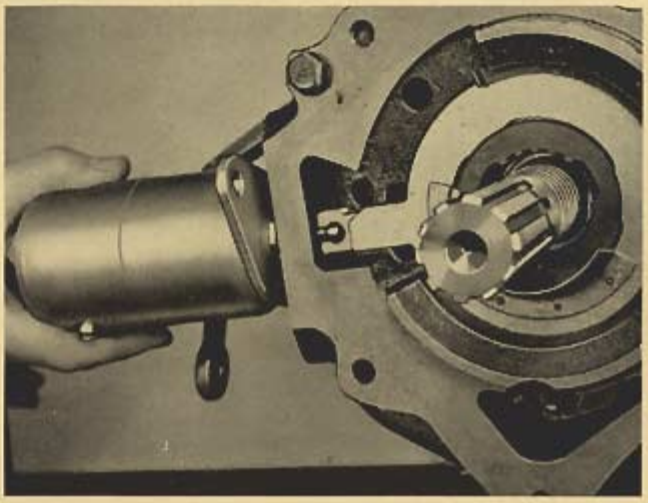

Figure 13

Install the solenoid so that the two terminal screws are toward the rear or toward the overdrive case when it is installed. To install the solenoid, turn it approximately ¼ turn to the right (clockwise) from its normal position when installed (figure 13), push inward to engage the plunger with the pawl, and then rotate the solenoid ¼ turn to the left (counterclockwise) to lock the plunger into the pawl. Install and tighten the solenoid retaining screws.

Install the reverse plunger, shift rail, and shift fork assembly and the stationary gear together and in one operation as shown in figure 14.

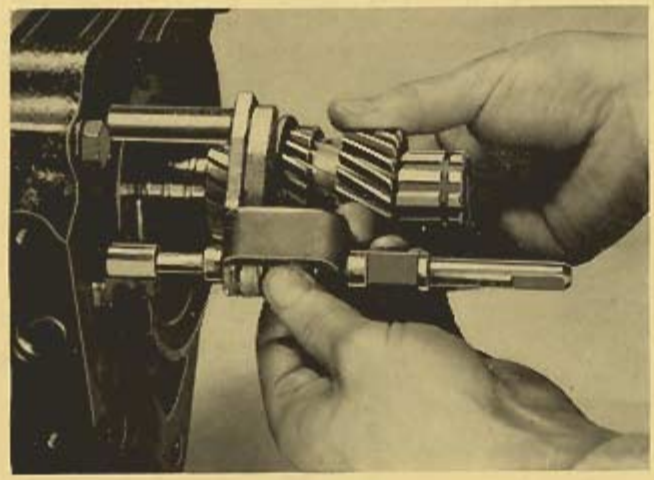

Figure 14

Install the pinion cage assembly retaining snap ring which was tagged or marked during disassembly. See figure 15. If a new ring is to be installed, the thickness of the new ring should be checked to insure installing one of the proper thickness. The ring thickness should be .062 inch, plus or minus .002 inch.

Slide the pinion and cage assembly and the free wheel cam assembly onto the transmission driving shaft and install the free wheel cam assembly retaining

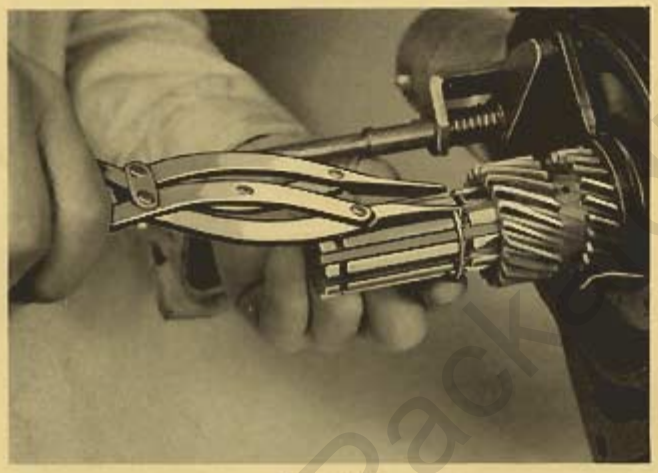

Figure 15

snap ring. This snap ring is available in thicknesses of .062, .068, and .074 inch. Select and install a ring which will not permit any end play of the pinion and cage assembly and the free wheel cam assembly on the transmission driving shaft.

Place the free wheel rollers in the roller retainer using a rubber band to hold them in the retainer as shown in figure 16. Rotate the retainer to the left (counterclockwise) to position and hold the rollers at the bottom of their ramps on the cam.

Assemble the ring gear to the main shaft and install the ring gear retaining ring. Rings are available in thicknesses of .055, .057, and .059 inch. Select and install a ring which will not permit end movement of the ring gear on the main shaft.

Insert the lockout lever shaft into its opening from inside the case. Position the shaft so that the cam on the inner end is toward the top of the case. With the shaft in this position, install the lockout lever so it is in the overdrive position or nearly against the bottom of the stop on the case.

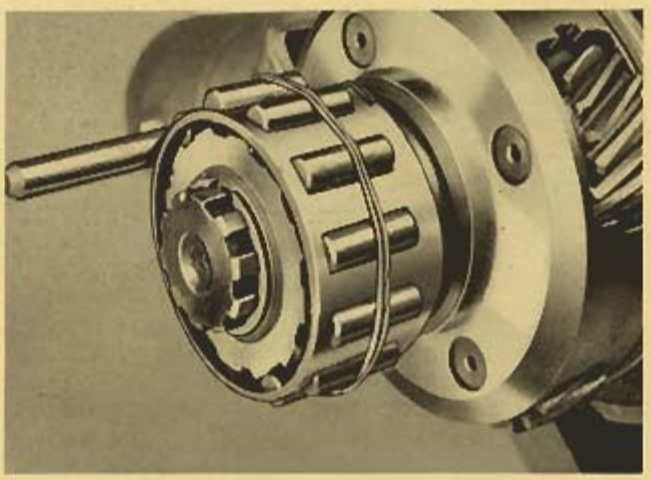

Figure 16

Press the main shaft rear bearing into the case using an arbor press. If an arbor press is not available, tap the bearing into the case using a fiber block or a brass drift and small hammer. The rear bearing front retaining ring was not removed from the case during disassembly of the unit since this ring seldom requires replacement. However, if a new ring is to be installed before installing the rear bearing, the thickness of the new ring should be .087 inch, plus or minus .002 inch.

Install the rear bearing rear retaining ring. This ring is available in thicknesses of .087, .090, .093, and .096 inch. Select a ring to hold the bearing tightly against the front retaining ring.

Figure 17

Press or tap a new main shaft oil seal into the case. The seal is properly positioned when the shoulder of the seal retainer is flush with the end of the case as shown in figure 17.

Place the speedometer driving gear in the rear of the case and then press or tap the main shaft front bearing into place.

Coat the bearing and seal contact surfaces of the main shaft with lubriplate and install the main shaft and ring gear assembly in the case. To install the assembly, start the end of the main shaft into the front bearing. With a finger inserted through the oil seal and the rear bearing, hold the speedometer driving gear up in position and guide the end of the shaft through the gear and the rear bearing while pushing the assembly toward the rear of the case.

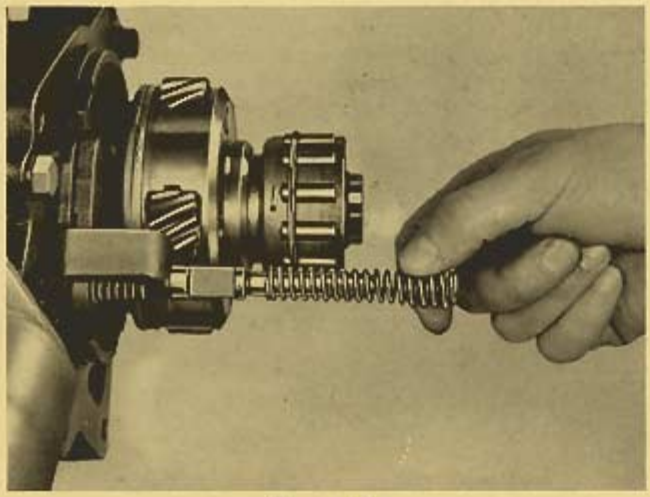

Figure 18

Install the universal joint flange, washer, and the retaining nut. The specified torque for tightening the retaining nut is 200 to 225 foot pounds. The nut must be tightened securely, otherwise the speedometer driving gear may not turn with the main shaft at all times resulting in speedometer fluctuation and faulty governor operation.

Install the governor and place the speedometer pinion and shaft in the case. Work the lockout lever and shaft outward as far as possible so the inner end of the shaft will not interfere with the shift rail when the case is being assembled to the adapter.

Place the shift rail retractor spring on the rail, as shown in figure 18, and place a new gasket on the face of the adapter.

Support the case assembly and move it toward the adapter while turning the main shaft to line up the pinions so they can enter the ring gear. Do not attempt to remove the rubber band which is holding the free wheel rollers in the roller retainer. The roller race inside the main shaft will push the rubber band off the rollers and the lubricant will dissolve it. When the shift rail retractor spring is in its free position it extends beyond the end of the rail. It is necessary to compress the spring and to overcome a slight amount of spring tension while pushing the case toward the adapter. It also may be necessary to rotate the case slightly to the right or left or to tilt it upward or downward to permit the end of the shift rail to enter the pilot hole in the case.

Install the case to adapter retaining screws using a copper gasket between the case and washer of the screws having drilled heads for lock-wiring.

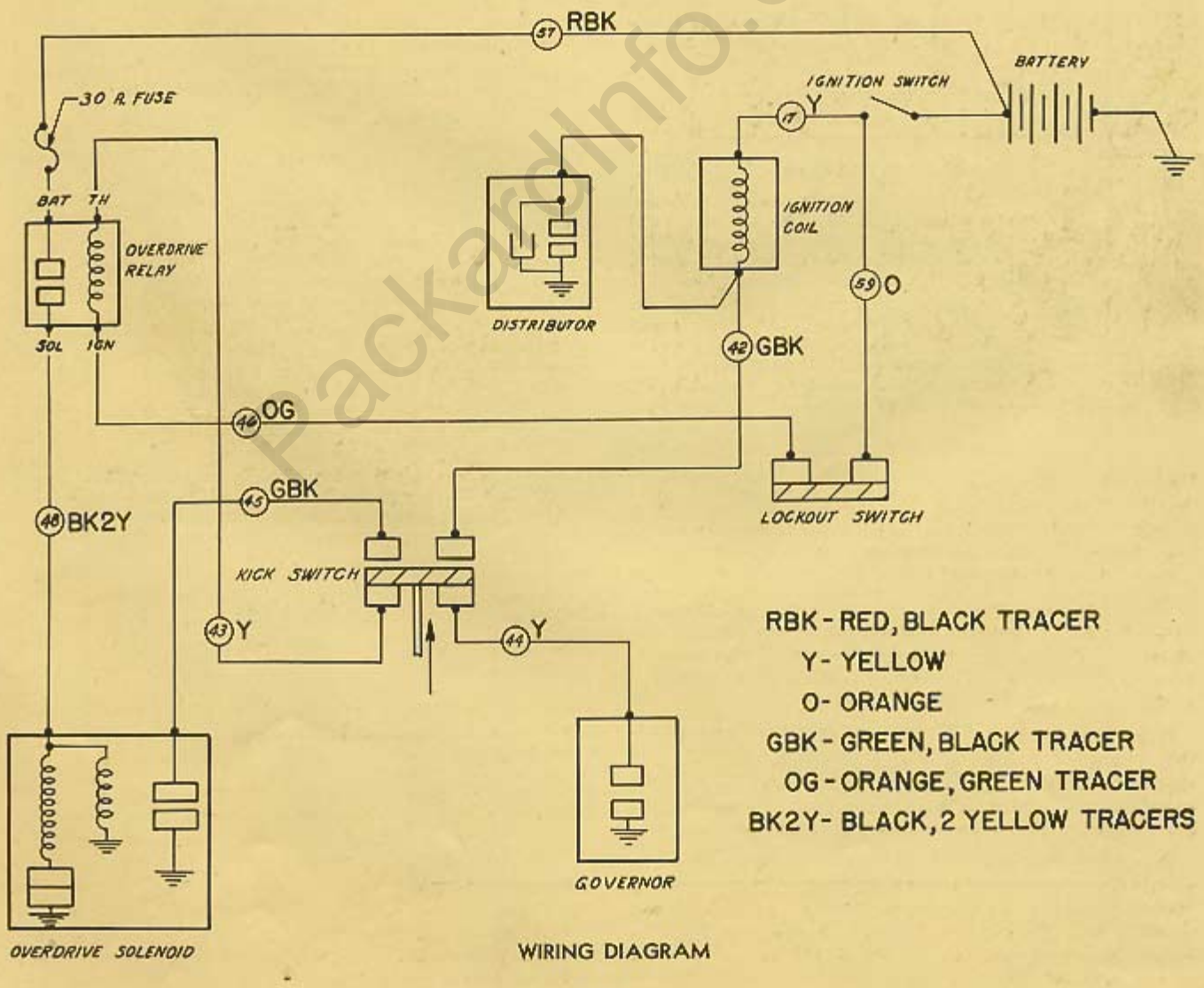

WIRING DIAGRAM

Tighten the retaining screws and then push the lockout lever and shaft inward to engage the cam on the end of the shaft with the shift rail. Install the lever shaft tapered retaining pin.

Connect the overdrive governor and the solenoid wiring, speedometer cable, lockout cable, and the propeller shaft. Fill the unit to the filler plug level using S.A.E. 90 transmission oil.

Operating Instructions for the R-11 Overdrive are given on a tag and insert page as shown. Purchasers of new cars equipped with the R-11 Overdrive receive these and Dealers should make sure the instructions are understood by Owners.

ATTENTION

THIS CAR EQUIPPED WITH A NEW TYPE OVERDRIVE

The instructions given in the book, "Operating Your 1949 22nd Series Packard," should be ignored and the instructions given on this page should be followed.

operation of the overdrive

Engagement and Lockout

The Overdrive is made operative or locked out by means of a control knob located under the edge of the instrument panel at the right of the steering column. The Overdrive may be made operative while driving at any speed by pushing the control knob in as far as possible.

To lock out the Overdrive at speeds below engaging speed (22 miles per hour) press lightly on the accelerator pedal and pull out the control knob. At speeds above engaging speed (22 miles per hour) press the accelerator pedal firmly to the floor board to kick down into conventional gear, then pull out the lockout knob.

The shifting in and out of Overdrive while driving is controlled by means of the accelerator pedal.

To bring the Overdrive into operation, the car is started and the gears shifted in the normal way. When the car speed has reached the Overdrive engaging speed (approximately 22 miles per hour), it may be engaged by momentarily lifting the foot from the accelerator pedal, then returning it and resuming normal driving. The car will remain in Overdrive as long as the car speed is maintained above approximately 17 miles per hour. When the car speed drops below approximately 17 miles per hour, the Overdrive will automatically shift back into the conventional high gear.

Kickdown

If, when operating in Overdrive, it is desired to shift back into conventional high gear to obtain quick acceleration for passing another vehicle, it may be done by pushing the accelerator pedal firmly to the floor board. Then, when the foot is momentarily lifted from the accelerator, Overdrive will automatically come into operation again.

DEALER—DO NOT REMOVE THIS TAG

OVERDRIVE OPERATING INSTRUCTIONS

1—To make overdrive operative, push the lockout knob IN as far as possible.

2—To shift into overdrive after car speed reaches approximately 22 MPH, momentarily release the accelerator.

3—To shift back into conventional gear for passing, etc., press the accelerator firmly to the floor board.

4—To lock out overdrive below 22 MPH, press accelerator pedal lightly and pull out knob; above 22 MPH press accelerator firmly to the floor board and pull out knob.

NOTE: Lock out overdrive before descending steep grades.

PRINTED IN U. S. A.