PACKARD SERVICE LETTER

VOL. 12 No. 18 SEPTEMBER 15, 1938

SERVICE INFORMATION ON THE 1939 PACKARD CARS

This issue of the Packard Service Letter contains lubrication charts, wiring diagrams and complete service specifications and adjustments.

In connection with the lubrication of the 1939 cars there are a few items of special interest. Both chassis lubrication and engine oil change are now recommended at 2000-mile intervals.

One new point to lubricate has been added. This is the steering crank where pressure gun grease is used. This applies to the Six, Eight and Super Eight.

The new type water pump used on the Six, Eight and Super Eight does not require lubrication and therefore no provision for lubricating the pump is provided.

On the universal joints S.A.E. 160 oil was previously used whereas pressure gun grease is now recommended. On the Packard Twelve only a fitting is provided for lubricating the joints and disassembly for repacking is not necessary.

You will notice on the transmission and steering lubricant specification that whereas S.A.E. 160 was formerly recommended, this year the recommendation reads S.A.E. 140 or 160. The S.A.E. will shortly discontinue the 160 designation in favor of a new 140 specification.

On the transmission and overdrive units the oil level in the transmission should be checked separately from the overdrive unit and the level maintained flush with the filler plug "B". The overdrive unit is equipped with its own drain plug "D" and filler plug "C" and the oil level should be checked separately from that of the transmission. The oil level in the overdrive unit is higher than in the transmission and should be maintained at the level of the plug "C". Avoid overoiling the transmission by removing the

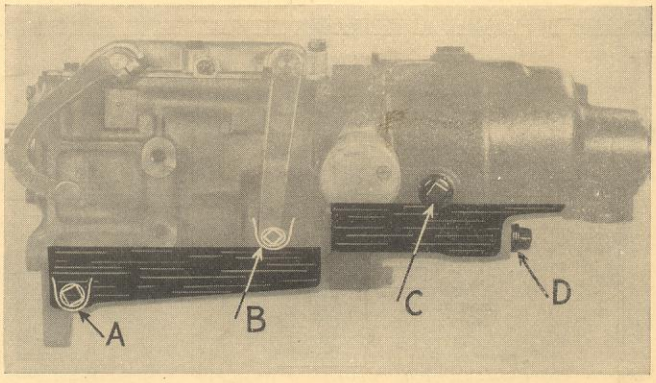

transmission filler plug "B" when filling the overdrive unit. The same lubricant is used in both units. See lubrication specifications.

PackardInfo.com

PACKARD SIX AND EIGHT LUBRICATION AND WIRING DIAGRAMS

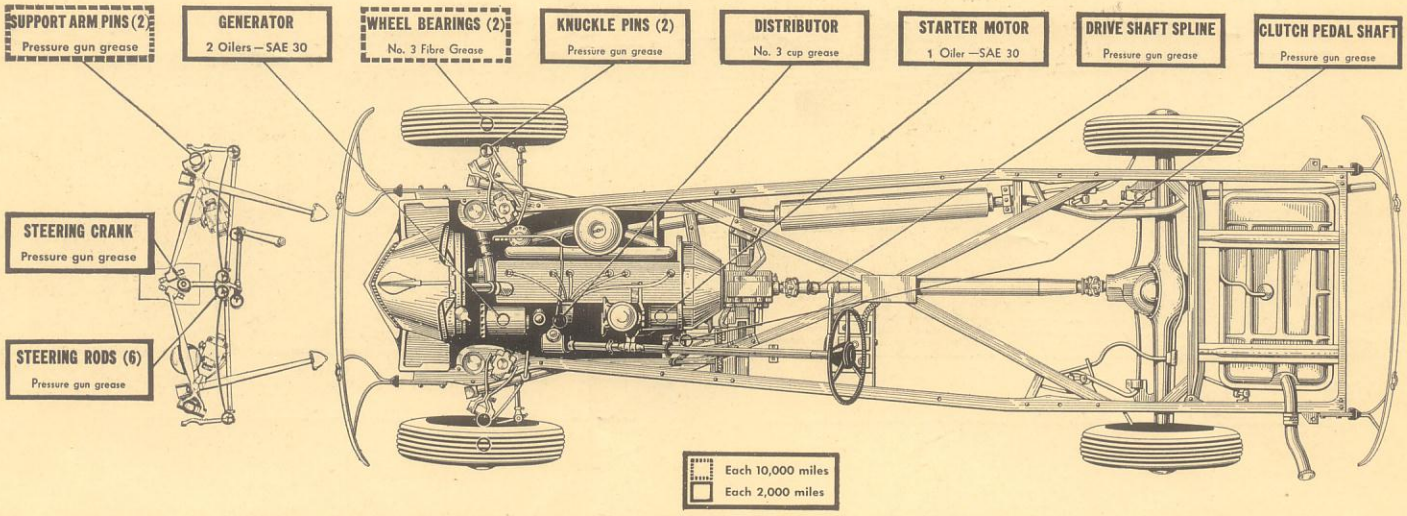

MOTOR

Change oil every 2,000 miles
See General Lubrication

STEERING GEAR

Drain and refill in Spring SAE 140 or 160. Thin with kerosene or use SAE 90 for cold weather

TRANSMISSION

Drain and refill in Spring SAE 140 or 160. Thin with kerosene or use SAE 90 for cold weather

REAR AXLE

Drain and refill in the Fall
Use only approved lubricants

EIGHT FIRING ORDER 1-6-2-5-8-3-7-4

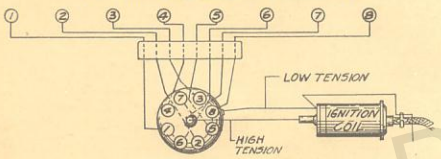

PackardInfo.com

NO	GA	COLOR	LOCATION	NO	GA	COLOR	LOCATION
1	10	RED	FROM STARTER MOTOR SWITCH TO AMMETER	13	16	BLACK	FROM IGNITION SWITCH TO GASOLINE GAUGE
3A	10	RED	FROM CURRENT REGULATOR TO GENERATOR	14	14	RED	FROM LIGHTING SW. TO LAMP FRONT R'T. (CITY)
3B	10	BLACK	FROM CURRENT REGULATOR TO AMMETER	15A	14	WHITE	FROM DIMMER SW. TO LAMP FRONT L'T. (CITY AND PARKING)
3C	12	BLACK	FROM IGNITION SWITCH TO AMMETER	15B	14	WHITE	FROM DIMMER SWITCH TO LIGHTING SWITCH
5	14	BLACK	FROM LIGHTING SWITCH TO DIMMER SWITCH	16	14	GREEN	FROM LIGHTING SW. TO LAMP FRONT R.T. (DRIVING & PARKING)
6A	14	YELLOW	FROM DIMMER SWITCH TO LAMP F'T. L'T. (DRIVING)	17	16	BLACK WITH RED TRAC.	FROM LIGHT'G. SW. TO LAMP F'T. R'T. & L'T. (PARKING)
6B	14	YELLOW	FROM DIMMER SWITCH TO LIGHTING SWITCH	20	16	BLACK WITH GREEN TRACER.	FROM STEERING POST HORN BUT'N. TO HORN RELAY
7A	16	BLACK	FROM STARTER BUT'N. TO STARTER MTR. SW.	21	12	BLACK	FROM STARTER MOTOR SW. TO HORN RELAY
7B	12	BLACK	FROM STARTER BUT'N. TO IGNITION SWITCH	25AB	14	GREEN	FROM VOLTAGE REGULATOR TO GENERATOR.
7C	12	BLACK	FROM STARTER BUT'N. TO LIGHTING SWITCH	24	18	BROWN	FROM VOLTAGE REGULATOR TO GENERATOR.
8A	16	BLACK	FROM PANEL RHEOSTAT TO TAIL LAMP FUSE	25	18	WHITE	FROM LIGHTING SW. TO SPEEDOM. BRIGHT LIGHT IND.
8B	16	BLACK	FROM PANEL RHEOSTAT TO R'R. HARNESS J'N.	26	12	BLACK	FROM OVERDRIVE OPERATING SOLENOID TO OVERDRIVE SWITCH (5)
8CDE	16	BLACK	FROM R'R. HARNESS J'N. TO REAR LAMPS	27	16	BLACK WITH RED TRACER.	FROM OVERDRIVE OPERATING SOLENOID TO OVERDRIVE SWITCH (1)
9A	16	GREEN	FROM FUSE AT LIGHT'G. SW. TO STOP LIGHT SW.	28	16	GREEN	FROM OVERDRIVE SWITCH TO COIL
9B	16	GREEN	FROM R'R. HARNESS J'N. TO STOP LIGHT SW.				
9C	16	GREEN	FROM R'R. HARNESS J'N. TO STOP LIGHT.				
11A	18	TAN WITH RED AND BLACK TRACER.	FROM R'R. HARNESS J'N. TO GAS. GAUGE.				
11B	18	TAN WITH RED AND BLACK TRACER.	FROM R'R. HARNESS J'N. TO GAS. TANK GAUGE				

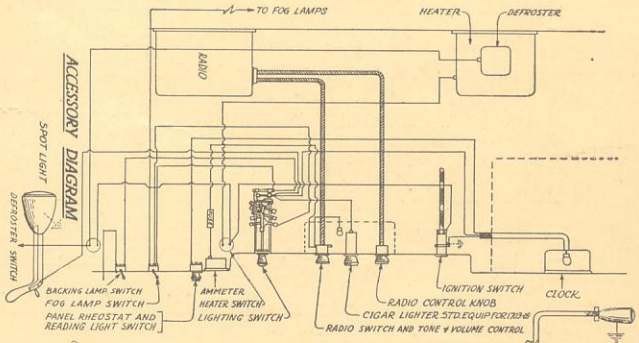

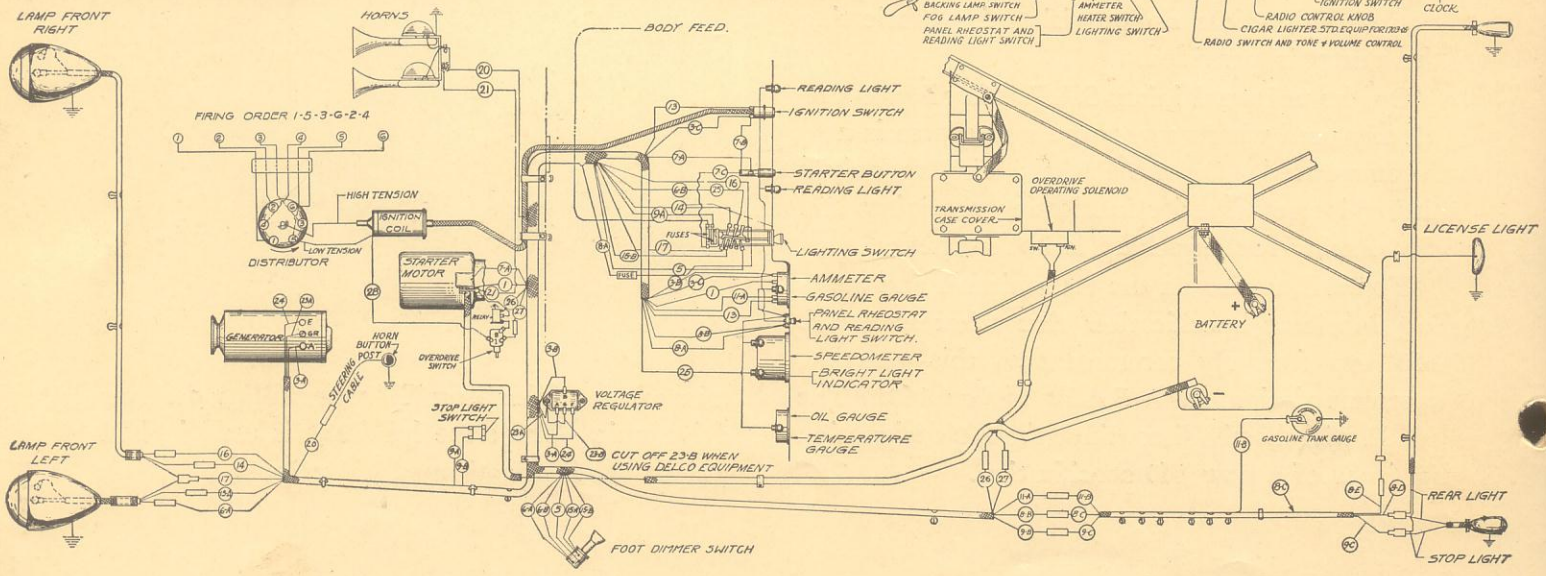

PACKARD SUPER EIGHT LUBRICATION AND WIRING DIAGRAMS

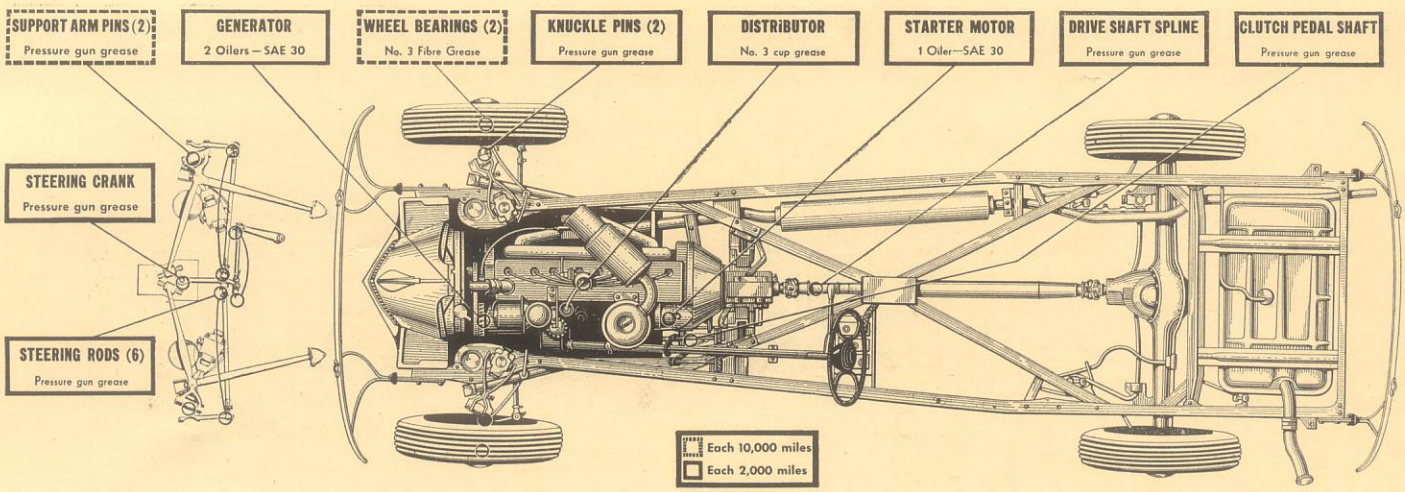

MOTOR

Change oil every 2,000 miles
See General Lubrication

STEERING GEAR

Drain and refill in Spring SAE 140 or 160. Thin with kerosene or use SAE 90 for cold weather

TRANSMISSION

Drain and refill in Spring SAE 140 or 160. Thin with kerosene or use SAE 90 for cold weather

REAR AXLE

Drain and refill in the Fall
Use only approved lubricants

PackardInfo.com

NO	GA	COLOR	LOCATION	NO	GA	COLOR	LOCATION
1	10	RED	FROM STARTER MOTOR SWITCH TO AMMETER	13	16	BLACK	FROM IGNITION SWITCH TO GASOLINE GAUGE
3A	10	RED	FROM CURRENT REGULATOR TO GENERATOR	14	14	RED	FROM LIGHTING SW. TO LAMP FRONT L.T. (CITY)
3B	10	BLACK	FROM CURRENT REGULATOR TO AMMETER	15A	14	WHITE	FROM DIMMER SW. TO LAMP FRONT L.T. (CITY AND PASSING)
3C	12	BLACK	FROM IGNITION SWITCH TO AMMETER	15B	14	WHITE	FROM DIMMER SWITCH TO LIGHTING SWITCH
5	14	BLACK	FROM LIGHTING SWITCH TO DIMMER SWITCH	16	14	GREEN	FROM LIGHTING SW. TO LAMP FRONT L.T. (DRIVING & PASSING)
6A	14	YELLOW	FROM DIMMER SWITCH TO LAMP F.T. L.T. (DRIVING)	17	16	BLACK WITH RED TRAC.	FROM LIGHT'G. SW. TO LAMP F.T. R.T. & L.T. (PARKING)
6B	14	YELLOW	FROM DIMMER SWITCH TO LIGHTING SWITCH	20	16	BLACK WITH GREEN TRACER.	FROM STEERING POST HORN BUT'N. TO HORN RELAY
7A	16	BLACK	FROM STARTER BUT'N. TO STARTER MTR. SW.	21	12	BLACK	FROM STARTER MOTOR SW. TO HORN RELAY
7B	12	BLACK	FROM STARTER BUT'N. TO IGNITION SWITCH	25AB	14	GREEN	FROM VOLTAGE REGULATOR TO GENERATOR.
7C	12	BLACK	FROM STARTER BUT'N. TO LIGHTING SWITCH	24	18	BROWN	FROM VOLTAGE REGULATOR TO GENERATOR.
8A	16	BLACK	FROM PANEL RHEOSTAT TO TAIL LAMP FUSE	25	18	WHITE	FROM LIGHTING SW. TO SPEEDOM. BRIGHT LIGHT IND.
8B	16	BLACK	FROM PANEL RHEOSTAT TO R'R. HARNESS J'N.	26	12	BLACK.	FROM OVERDRIVE OPERATING SOLENOID TO OVERDRIVE SWITCH (5)
8CDE	16	BLACK	FROM R'R. HARNESS J'N. TO REAR LAMPS	27	16	BLACK WITH RED TRACER.	FROM OVERDRIVE OPERATING SOLENOID TO OVERDRIVE SWITCH (1)
9A	16	GREEN	FROM FUSE AT LIGHT'G. SW. TO STOP LIGHT SW.	28	16	GREEN	FROM OVERDRIVE SWITCH TO COIL
9B	16	GREEN	FROM R'R. HARNESS J'N. TO STOP LIGHT SW.				
9C	16	GREEN	FROM R'R. HARNESS J'N. TO STOP LIGHT.				
11A	18	TAN WITH RED AND BLACK TRACER	FROM R'R. HARNESS J'N. TO GAS. GAUGE.				
11B	18	TAN WITH RED AND BLACK TRACER	FROM R'R. HARNESS J'N. TO GAS. TANK GAUGE				

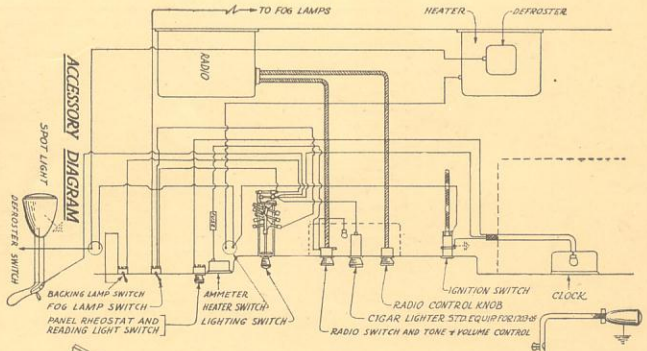

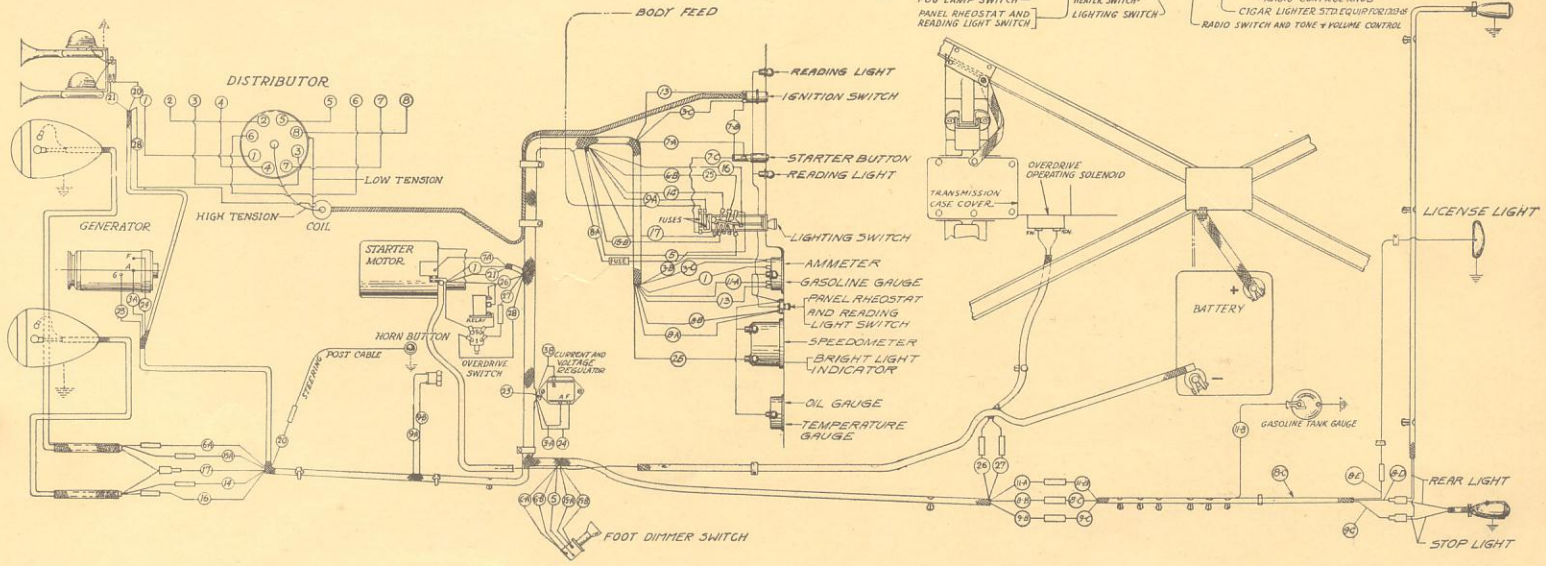

PACKARD TWELVE LUBRICATION AND WIRING DIAGRAMS

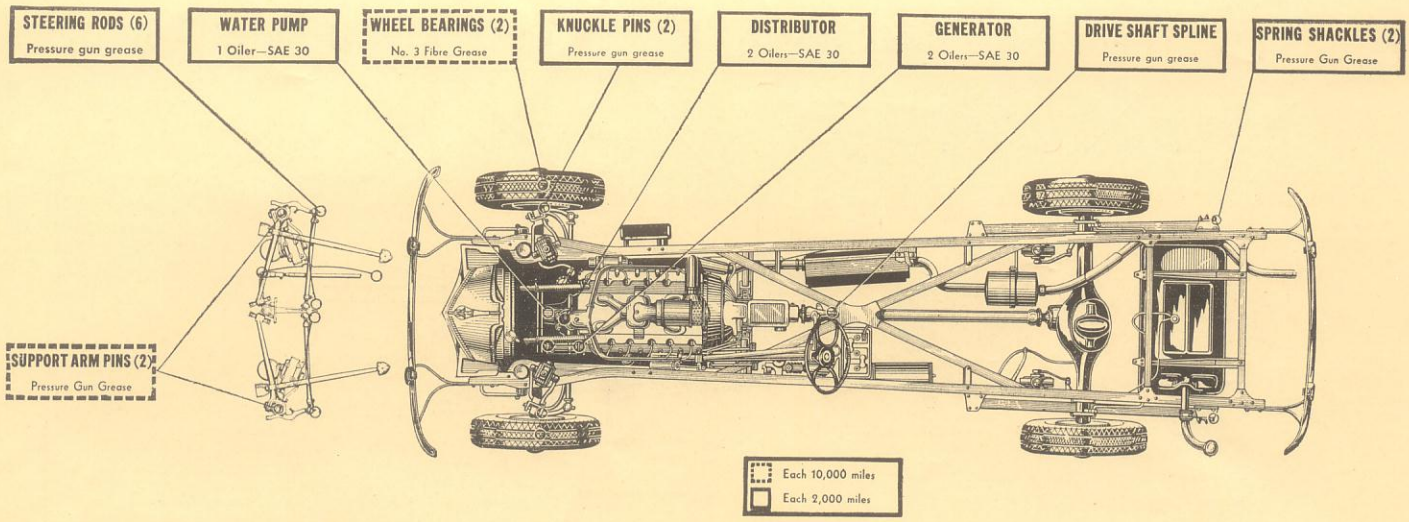

MOTOR

Change oil every 2,000 miles
See General Lubrication

STEERING GEAR

Drain and refill in Spring SAE 140 or 160. Thin with kerosene or use SAE 90 for cold weather

TRANSMISSION

Drain and refill in Spring SAE 140 or 160. Thin with kerosene or use SAE 90 for cold weather

REAR AXLE

Drain and refill in the Fall
Use only approved lubricants

PackardInfo.com

NO	GA	COLOR	LOCATION
1	8	RED	FROM STARTER MOTOR SWITCH TO AMMETER
12	12	BLACK	" LIGHT SWITCH FEED " "
5A	8	RED	" CURRENT REGULATOR TO GENERATOR
5B	8	BLACK	" " " " AMMETER
5	14	BLACK	" LIGHTING SWITCH TO DIMMER SWITCH
6A	14	WHITE	" DIMMER " " LIGHTING "
6B	14	WHITE	" " " " LAMP FRONT LEFT (DRIVE)
7	16	BLACK	" STARTER BUTTON TO STARTER MOTOR SWITCH
8	12	RED	" CIGAR LIGHTER TO CIGAR LIGHTER FEED
9	14	BLACK	" STARTER BUTTON TO LIGHT SWITCH FEED
11A	18	BLACK AND RED TRACER	" REAR HARNESS JUNCTION TO GASOLINE GAUGE
11B	18	BLACK AND RED TRACER	" " " " " " "
14	14	GREEN	" " " " " GAS TANK
15A	14	YELLOW	" LIGHTING SWITCH TO LAMP FRONT RIGHT (DRIVE & PASS)
15B	14	YELLOW	" DIMMER " " " " LEFT (CITY & PASS)
16	16	BLACK WITH RED TRACER	" LIGHTING " " LIGHTING SWITCH
18	14	RED	" " " " LAMPS FRONT (PARK)
20	18	BROWN	" CURRENT REGULATOR TO GENERATOR
22A	16	BLACK	" STEERING POST HORN BUTTON TO HORN RELAY
22-B	12	BLACK	" AMMETER TO HORN RELAY
23	16	BLACK	" STARTER BUTTON TO IGNITION SWITCH
24	16	BLACK	" PANEL RHEOSTAT TO TAIL LIGHT FEED

NO	GA	COLOR	LOCATION
25	14	GREEN	FROM IGNITION SWITCH TO GAS GAUGE TO STOP LIGHT FUSE
26-B	14	GREEN	" STOP LIGHT TO SPLICE B
26-C	14	GREEN	" REAR LIGHT JUNCTION TO STOPLIGHT REAR RIGHT
27	14	GREEN	" STOP " FEED TO SPLICE A
27A	14	GREEN	" " " SWITCH TO " "
27B	14	GREEN	" " " " " " REAR HARNESS JCT TO SPLICE B
27C	14	GREEN	" REAR HARNESS JUNCTION TO SPLICE A
32A	14	GREEN	" BACKING LIGHT SWITCH TO SPLICE B
37D	14	RED	" " " " TO REAR HARNESS JCT
29A	16	BLACK	" REAR HARNESS JUNCTION TO PANEL RHEOSTAT
29B	16	BLACK	" " " " " SPLICE C
29C	16	BLACK	" TAIL LIGHT TO SPLICE C
29E	16	BLACK	" " " JUNCTION TO LAMP REAR RIGHT
30	18	BROWN	" LIGHTING SWITCH TO CITY LIGHT INDICATOR
31	18	BROWN	" " " " PARK " "
32	18	BROWN	" " " " DRIVE " "
45A	16	BLACK	RIGHT DOOR SWITCH FEED TO SPLICE C
45B	16	BLACK	RIGHT " " TO LAMP REAR RIGHT JUNCT
48	16	BLACK	STARTER SWITCH TO READING LIGHTS SWITCH
50	14	GREEN	CURRENT REGULATOR GROUND TO GENERATOR GRD
48B	16	BLACK	
48	16	BLACK	

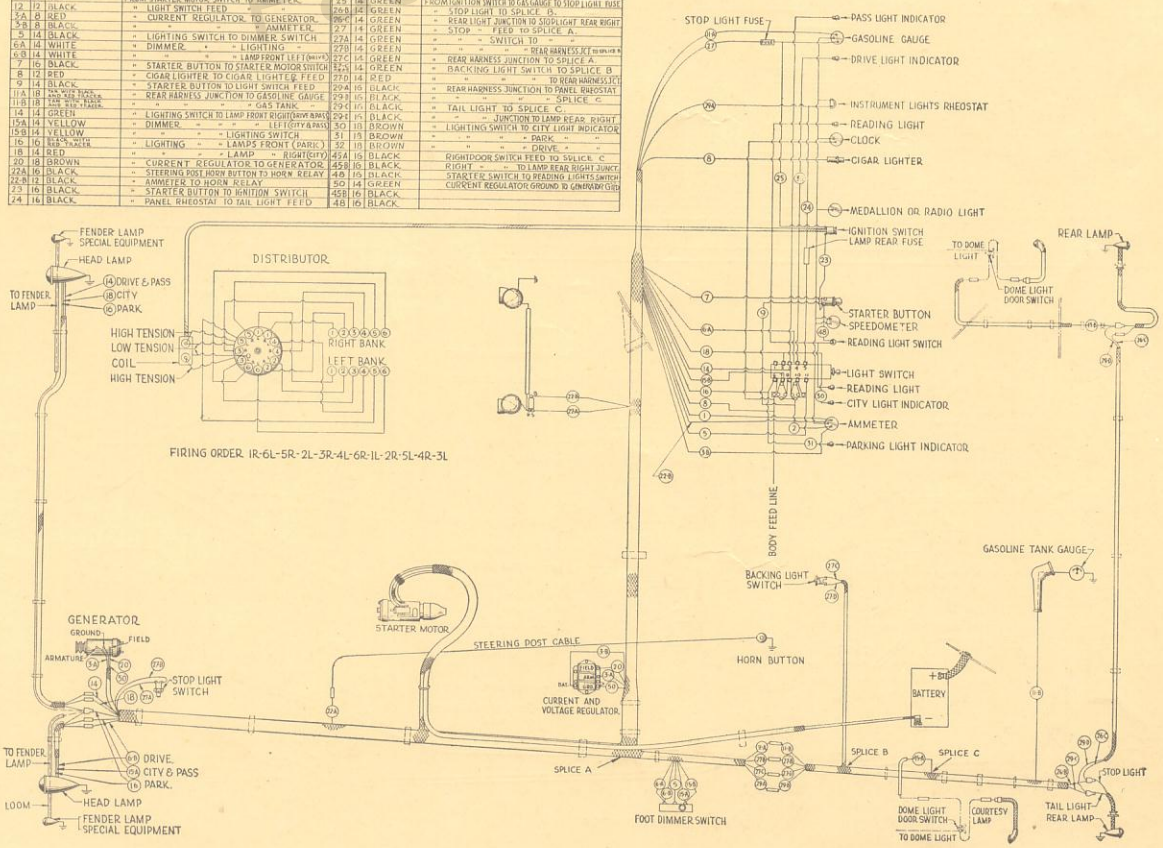

1939

MECHANICAL SPECIFICATIONS AND ADJUSTMENTS

COVERING PACKARD SIX, EIGHT, SUPER EIGHT AND TWELVE

NAME	1700	1701-1702	1703-1705	1707-1708
ENGINE				
Make	Packard	Packard	Packard	Packard
Type	L Head—Vertical En bloc	L Head—Vertical En bloc	L Head—Vertical En bloc	Modified L Head—V Type Block
A.M.A. Horsepower	29.4	33.8	32.5	56.7
Maximum Brake Horsepower	100	120	130	175
Revolutions per Minute	3200	3600	3200	3200
Suspension	Rubber Mounted	Rubber Mounted	Rubber Mounted	Rubber Mounted
Firing Order	1-5-3-6-2-4	1-6-2-5-8-3-7-4	1-6-2-5-8-3-7-4	1R-6L-5R-2L-3R-4L 6R-1L-2R-5L-4R-3L
Bore	3½″	3¼″	3 3/16″	3 7/16″
Stroke	4¼″	4¼″	5″	4¼″
Piston Displacement	245.34 cu. in.	282.05 cu. in.	320 cu. in.	473 cu. in.
Cylinders	6 in line	8 in line	8 in line	12 two blocks at 67° angle
Compression Ratio—Standard	6.52 to 1	6.41 to 1	6.45 to 1	6.30 to 1
Compression Ratio—Optional	6.85 to 1	6.85 to 1	6.85 to 1	7.03 to 1
Compression Ratio—Optional	None	None	None	6.00 to 1
Weight with Clutch and Transmission	787 lbs. with overdrive	843 lbs. with overdrive	1014 lbs. with overdrive	1346 lbs.
Cylinder Head Material	Cast Iron	Cast Iron	Cast Iron	Aluminum
Motor r.p.m. per Mile without overdrive	3296	3021-1701 3257-1702	3021-1703 3146-1705	2879
CRANKCASE				
Type	Integral with cylinders	Integral with cylinders	Separate casting	Integral with cylinders
Upper Half Material	Cast Iron	Cast Iron	Aluminum	Cast Iron
Lower Half Material	Steel Stamping	Steel Stamping	Aluminum	Aluminum
Oil Capacity	5 Qts.	6 Qts.	7½ Qts.	10 Qts.
Main Bearing Diameter	2¾″	2¾″	2⅝″	2¾″
Main Bearing Length No. 1	1 19/32″	1½″	2″	2¼″
Main Bearing Length No. 2	1½″	1 7/32″	61/64″	1⅝″
Main Bearing Length No. 3	1½″	1 19/32″	1 17/64″	1⅝″
Main Bearing Length No. 4	2 5/16″	1 7/32″	61/64″	1 31/32″
Main Bearing Length No. 5	None	2 5/16″	1 45/64″	None
Main Bearing Length No. 6	None	None	61/64″	None
Main Bearing Length No. 7	None	None	1⅜″	None
Main Bearing Length No. 8	None	None	61/64″	None
Main Bearing Length No. 9	None	None	2 21/64″	None
Crankcase Oil Gauge	Dip Stick, left side	Dip Stick, left side	Dip Stick, left side	Dip Stick, left side
Total Main Bearing Area	45.1 sq. in.	56.6 sq in.	90.86 sq. in.	56.13 sq. in.
Crankcase Drain Plug	⅝″—18	⅝″—18	1¼″—18	1¼″—18
VALVES				
Valve Lift	Ex. .318 Int. .3175	Ex. .318 Int. .3175	.354	.3125
Valve Arrangement	L Head	L Head	L Head	Modified L Head
Valve Head Diameter—Inlet	1.575″	1 17/32″	1 21/32″	1 41/64″

PackardInfo.com

NAME	1700	1701-1702	1703-1705	1707-1708
VALVES—Continued				
Valve Head Diameter—Exhaust	$1\frac{13}{32}$"	$1\frac{13}{32}$"	$1\frac{15}{32}$"	$1\frac{21}{32}$"
Valve Stem Diameter—Inlet	.34025"	.34025"	.3405"	.3405"
Valve Stem Diameter—Exhaust	.34025"	.34025"	.3405"	.338"
Valve Stem Length	5⅝"	5⅝"	$7\frac{13}{32}$"	$6\frac{35}{64}$"
Valve Material—Inlet	Chrome Nickel	Chrome Nickel	Chrome Nickel	Chrome Nickel
Valve Material—Exhaust	Austenitic Steel	Austenitic Steel	Austenitic Steel	Austenitic Steel
Valve End (Type)	Slot and Key	Slot and Key	Slot and Key	Slot and Key
Valve Stem Clearance—Inlet	.002"	.002"	.003"	.0025"
Valve Stem Clearance—Exhaust	.004"	.004"	.0045"	.005"
Valve Tappet Clearance Inlet—Warm	.007"	.007"	.006"	Automatic Take-up
Valve Tappet Clearance Exhaust—Warm	.010"	.010"	.008"	Automatic Take-up
Inlet Valve Opens	1° BTDC	1° BTDC	26° BTDC	ATDC
Inlet Valve Closes	39° ALDC	39° ALDC	69° ALDC	45° ALDC
Exhaust Valve Closes	5° ATDC	5° ATDC	34° ATDC	10° ATDC
Exhaust Valve Opens	45° BLDC	45° BLDC	61° BLDC	35° BLDC
Tappet Clearance for Timing Inlet	.0125	.0125	.005	—
Tappet Clearance for Timing Exhaust	.015	.015	.005	—
Valve Seat Angle—Inlet	30°	30°	45°	45°
Valve Seat Angle—Exhaust	45°	45°	45°	45°
Valve Spring	Single	Single	Packard Double	Single
Valve Spring Load Valve Closed	50 lbs. (1⅝")	50 lbs. (1⅝")	73 lbs. ($3\frac{1}{16}$")	70 lbs. ($2\frac{7}{32}$")
Valve Spring Load Valve Open	120 lbs.	120 lbs.	159 lbs.	145 lbs.
Exhaust Pipe Diameter	2"	2¼"	2¼"	2¾"
Muffler Size—Front	$5\frac{9}{16}$" x 38¾"	$5\frac{9}{16}$" x 38¾"	6" x 42"	8⅝" x 24½"
Muffler Size—Rear	None	None	None	$8\frac{31}{32}$" x 12½"
FRONT END				
Gear Cover	Steel Stamping	Steel Stamping	Steel Stamping	Aluminum Casting
Camshaft Drive	Silent Chain	Silent Chain	Silent Chain	Silent Chain
Make of Chain	Morse 3682-R	Morse 3682-R	Morse 3682-KX	Morse 1866-N
Length, Width and Pitch of Chain	58 links; 1¼"; .375"	58 links; 1¼"; .375"	70 links; 1½"; .375"	56 links; 1¾"; .500"
No. of Camshaft Bearings	4	5	8	4
Clearance of Camshaft Bearings	.001"-.003"	.001"-.003"	.0015"-.0035"	No. 1 and 4 .001"-.0015" No. 2 and 3 .002"-.0025"
Camshaft End Play	.002"-.004"	.002"-.004"	.001"-.004"	.002"-.006"
Camshaft Sprocket—Material and Size	Cast Iron—42 teeth	Cast Iron—42 teeth	Steel—54 teeth	Steel—42 teeth
Camshaft Chain Adjustment	None	None	None	None
PISTON				
Weight	19½ oz.	16⅞ oz.	17¾ oz.	20 oz.
Weight with Rings and Pin	26 oz.	22¾ oz.	24 oz.	26¾ oz.
Over-all Height	3⅞"	3⅞"	4¼"	4.318"
Height Centerline of Pin to Top	2⅛"	2⅛"	2½"	2.693"
Type and Material	Autothermic Aluminum alloy with strut	Autothermic Aluminum alloy with strut	Autothermic Aluminum alloy with strut	Autothermic Aluminum alloy with strut
Skirt Clearance	.001"	.001"	.001"	.001"
Piston Pin—Size	$3\frac{1}{64}$" x ⅞"	$2\frac{51}{64}$" x ⅞"	$2\frac{47}{64}$" x ⅞"	$2\frac{53}{64}$" x ⅞"
Type	Floating	Floating	Floating	Floating
Lubrication of Pin	Pressure	Pressure	Pressure	Pressure
Piston Pin Hole—Ream	.87515"-.87485"	.87515"-.87485"	.87515"-.87485"	.87515"-.87485"
Piston Pin Fit in Piston	Finger Push at 160°	Finger Push at 160°	Finger Push at 160°	Finger Push at 160°
Piston Pin Fit in Rod	Size to Size	Size to Size	Size to Size	Size to Size
Piston Pin Oversizes	.003"-.006"	.003"-.006"	.003"-.006"	.003"-.006"
No. of Rings per Piston	3	3	4	4
No. of Oil Rings per Piston	1	1	2	1
Depth of Piston Ring Grooves No. 1	.161"	.1562"	.15325"	.1652"
Depth of Piston Ring Grooves No. 2	.1835"	.1787"	.1732"	.1652"
Depth of Piston Ring Grooves No. 3	.1835"	.1787"	.1732"	1652"
Depth of Piston Ring Grooves No. 4	—	—	.1545"	.1852"

PackardInfo.com

NAME	1700	1701-1702	1703-1705	1707-1708
Type of Compression Rings	2 Per. Circle No. 70	2 Per. Circle No. 70	1 Plain 1 Per. Circle No. 70	1 Plain 2 Per. Circle No. 70
Type of Oil Rings	1 Per. Circle No. X90-85	1 Per. Circle No. X90-85	1 Per. Circle No. 85 1 Per. Circle No. X90-85	1 Per. Circle No. X90-85
Width of Compression Rings	.1240"-.123"	.1240"-.123"	.124"-.1230"	.124"-.1230"
Width of Oil Rings	.1865"-.186"	.1865"-.186"	.155"-.1545"	.155"-1545".
Piston Ring Wall Thickness No. 1	.140"-.150"	.135"-.145"	.130"-.140"	.140"-.150"
Piston Ring Wall Thickness No. 2	.140"-.150"	.135"-.145"	.130"-.140"	.140"-.150"
Piston Ring Wall Thickness No. 3	.122"-.130"	.121"-.129"	.140" Max.	.140"-.150"
Piston Ring Wall Thickness No. 4	—	—	.114"-.122"	.124"-.132"
Piston Ring Gap—Compression	.007"-.015"	.007"-.015"	.007"-.015"	.007"-.015"
Piston Ring Gap—Oil	.007"-.015"	.007"-.015"	.007"-.015"	.007"-.015"
Location of Rings	Above Pin	Above Pin	Above Pin	Above Pin
Piston Oil Drain Holes	12-$\frac{5}{32}$"	12-$\frac{5}{32}$"	20 No. 30 (.1285)	12 No. 30 (.1285)
Piston Oversizes	.005" .010", .020", .030", .040"	.005", .010", .020", .030", .040"	.003", .005", .010", .015", .020", .025", .030", .035", .045"	.003", .005", .010", .015", .020", .030", .045"
CONNECTING ROD				
Weight	1 lb. 15.6 oz.	1 lb. 15.6 oz.	2 lbs. 8.3 oz.	2 lbs. 4 oz.
Material	Steel Forging	Steel Forging	Steel Forging	Steel Forging
Bearing Type	Detachable Shell	Detachable Shell	Detachable Shell	Detachable Shell
Center to Center Length	7$\frac{11}{16}$"	7$\frac{11}{16}$"	10⅞"	9"
Diameter of Crankpin Bearing	2$\frac{3}{32}$"	2$\frac{3}{32}$"	2$\frac{3}{16}$"	2½"
Length of Crankpin Bearing	1¼"	1¼"	1$\frac{3}{32}$"	1⅛"
Clearance Bearing to Crankpin	.0005"-.0015"	.0005"-.0015"	.001"-.0015"	.001"-.0015"
End Play on Crankshaft	.004"-.010"	.004"-.010"	.003"-.005"	.008"-.010"
Oil Lead to Piston Pin	Rifle Drilled	Rifle Drilled	Rifle Drilled	Rifle Drilled
Bearing Material	Babbitt	Babbitt	Copper-Lead Alloy	Copper-Lead Alloy
Assembled in Motor	Oil Hole Toward Camshaft	Oil Hole Toward Camshaft	Oil Hole Toward Camshaft	Oil Hole on Starter Motor Side
Cap Attached	Bolts, Nuts and Lock Nuts	Bolts, Nuts and Lock Nuts	Bolts, Nuts and Cotters	Integral Studs, Nuts and Cotters
Shims	Not Used	Not Used	Not Used	Not Used
CRANKSHAFT				
Type	Counterbalanced	Counterbalanced	Counterbalanced	Counterbalanced
Material	Steel Forging	Steel Forging	Steel Forging	Steel Forging
No. of Counterweights	6 Forged Integral	8 Forged Integral	8 Bolted	6 Bolted
No. of Main Bearings	4	5	9	4
Main Bearing Diameter	2¾"	2¾"	2⅝"	2¾"
Thrust Taken On	No. 1	Center	No. 7	No. 1
Vibration Damper	Rubber Friction Disc, Waterproof	Rubber Friction Disc, Waterproof	Rubber Friction Disc, Waterproof	Rubber Friction Disc, Waterproof
Weight	81½ lbs.	95 lbs.	97½ lbs.	120 lbs.
End Play	.003"-.008"	.003"-.008"	.003"-.005"	.003"-.005"
Main Bearing Material	Babbitt Lined Steel Shell	Babbitt Lined Steel Shell	Babbitt Lined Steel Shell	Babbitt Lined Steel Shell
Clearance—All Main Bearings	.001"-.003"	.001"-.003"	.001"-.002"	.001"-.002"
Crankshaft Sprocket—Material and Size	Steel—21 teeth	Steel—21 teeth	Steel—27 teeth	Steel—21 teeth
Shims	Not Used	Not Used	Not Used	Not Used
MOTOR LUBRICATION				
Type	Full Pressure	Full Pressure	Full Pressure	Full Pressure
Oil Pump Type	Gear	Gear	Gear	Gear
Crankcase Capacity	5 Qts.	6 Qts.	7½ Qts.	10 Qts.
Oil Filler Location	Left Side	Left Side	Left Side	Left Side
Oil Filter Location	Left Side	Left Side	Left Side	Right Side
Oil Temperature Regulator	None	None	Left Side	Right Side
Oil Measuring Stick	Left Crankcase	Left Crankcase	Left Crankcase	Left Crankcase
Oil Intake	Floating	Floating	Floating	Stationary
Crankcase Ventilator	R. H. at Rear of Block	R. H. at Rear of Block	Right Side	Left Side and Valve Compartment
Oil Pressure—Normal Driving	35 lbs.	35 lbs.	50 lbs.	50 lbs.
Oil Drain	Hex. Head Flange Plug ⅝"—18	Hex. Head Flange Plug ⅝"—18	Hex. Head Flange Plug 1¼"—18	Hex. Head Flange Plug 1¼"—18

Packardinfo.com

NAME	1700	1701-1702	1703-1705	1707-1708
CHASSIS LUBRICATION Every 2,000 to 3,000 miles				
Crankcase—S.A.E. 30* *Below—10° F.—10-W plus 10% kerosene —10° F.—10-W +10° F.—20-W +32° F.—S.A.E. 30 *Average Daylight Temperature 90°F.—S.A.E. 40	Drain and Refill—5 qts.	Drain and Refill—6 qts.	Drain and Refill—7½ qts.	Drain and Refill—10 qts.
Rear Spring Shackles	—	—	—	*2 Lub. Connectors
Knuckle Pins—Pressure Gun Grease	2 Lub. Connectors	2 Lub. Connectors	2 Lub. Connectors	*2 Lub. Connectors
Steering Connecting Rod—Pressure Gun Grease	2 Lub. Connectors	2 Lub. Connectors	2 Lub. Connectors	2 Lub. Connectors
Steering Tie Rods—Pressure Gun Grease	4 Lub. Connectors	4 Lub. Connectors	4 Lub. Connectors	4 Lub. Connectors
Universal Joint Spline—Gun Grease	1 Lub. Connector	1 Lub. Connector	1 Lub. Connector	1 Lub. Connector
Water Pump Shaft—S.A.E. 30	—	—	—	1 Oiler
Generator—S.A.E. 30	2 Oilers	2 Oilers	2 Oilers	2 Oilers
Starter Motor—S.A.E. 30	1 Oiler	2 Oilers	2 Oilers	1 Oiler
Distributor—No. 3 Cup Grease S.A.E. 30	1 Cup	1 Cup	1 Cup	2 Oilers
Clutch and Brake Pedal—S.A.E. 30	1 Lub. Connector	1 Lub. Connector	1 Lub. Connector	—
Steering Crank—Pressure Gun Grease	1 Lub. Connector	1 Lub. Connector	1 Lub. Connector	—
Every 10,000 miles				
Support Arm Pin, Outer Gun Grease	2 Lub. Connectors	2 Lub. Connectors	2 Lub. Connectors	2 Lub. Connectors
Front Wheel Bearing No. 3 Fibre Grease	(4) Repack	(4) Repack	(4) Repack	(4) Repack
Transmission, S.A.E. 140 Summer 90 Winter	Drain and Refill	Drain and Refill	Drain and Refill	Drain and Refill
Steering Gear, S.A.E. 140 Summer 90 Winter	Drain and Refill (11 oz.)	Drain and Refill (11 oz.)	Drain and Refill (11 oz.)	Drain and Refill (¾ pt.)
Rear Axle—See Packard Dealer	Drain and Refill	Drain and Refill	Drain and Refill	Drain and Refill
Universal Joints, S.A.E. 140	—	—	—	2 Lub. Connectors
Every 30,000 miles				
Rear Wheel Bearing No. 3 Fibre Grease	Repack	Repack	Repack	Repack
Universal Joints, Gun Grease	Repack	Repack	Repack	—
*With Reservoirs				
CLUTCH				
Type	Single Dry Plate	Single Dry Plate	Single Dry Plate	Single Dry Plate with Vacuum Booster
Free Pedal	1½"—2"	1½"—2"	1¾"—2¼"	1"—1 13/16"
Facing Material	U.S. Asbestos No. 1133-G Woven	U.S. Asbestos No. 1133-G Woven	U.S. Asbestos No. 1133-G Woven	Hyco No. 3903-PDX
Size Facing	6" x 9½" x .125"	6" x 10" x .125"	6½" x 11" x .125"	7" x 12" x .137"
Throwout Bearing Lubrication	Packed	Packed	Packed	Packed
Clutch Spring Pressure	155 lbs. at 1 9/16"	115 lbs. at 1 9/16"	142½ lbs. at 1.677"	Inner 52 lbs. at 1 9/16" Outer 115 lbs. at 1 9/16"
No. of Springs	6	9	9	12 Each
Vibration Neutralizer	Springs	Springs	Springs	Springs
TRANSMISSION				
Type	Selective—Silent—Synchronized	Selective—Silent—Synchronized	Selective—Silent—Synchronized	Selective—Silent—Synchronized
No. of Forward Speeds	3	3	3	3
Overdrive	3.39 Std.	1701 3.28 Std. 1702 3.54 Std.	1703 3.28 Std. 1705 3.39 Std	Not Used
High	4.7 4.54	4.54 4.36 4.9 4.7	4.54 4.36 4.7 4.54	4.41 to 1
Second	7.19 6.94	6.94 6.67 7.49 7.19	6.94 6.67 7.19 6.94	6.73
First	11.41 11.02	11.02 10.58 11.89 11.41	11.02 10.58 11.41 11.02	10.86
Reverse	14.87 14.37	14.37 13.80 15.51 14.87	14.37 13.80 14.87 14.37	12.71
Oil Capacity	2 pts.	2 pts.	2 pts.	4½ pts.
Overdrive	1¼ pts.	1¼ pts.	1¼ pts.	—
Oil Level Plugs	½"—14 Pipe	½"—14 Pipe	½"—14 Pipe	1¼"—18 Flange
Gear Teeth	Helical	Helical	Helical	Helical
Steering Post Shift	Standard Equipment "Mechanical"	Standard Equipment "Mechanical"	Standard Equipment "Mechanical"	Standard Equipment "Evans Vacuum"
FRAME				
Type	Taper Pressed Steel Double Drop, Box Section Side Rail in Front	Taper Pressed Steel Double Drop, Box Section Side Rail in Front	Taper Pressed Steel Double Drop, Box Section Side Rail in Front	Taper Pressed Steel Double Drop, Box Section Side Rail in Front and at Kickup

PackardInfo.com

NAME	1700	1701-1702	1703-1705	1707-1708
Depth	$6\frac{15}{16}$"	$6\frac{15}{16}$"—1701 $7\frac{1}{32}$"—1702	$6\frac{15}{16}$"—1703 $7\frac{1}{32}$'—1705	$8\frac{1}{16}$"
Thickness	$\frac{7}{64}$"	$\frac{7}{64}$"—1701 $\frac{5}{32}$"—1702	$\frac{7}{64}$"—1703 $\frac{5}{32}$"—1705	$\frac{5}{32}$"
No. of Cross Members	5 I-Beam, X Type Member in Center	5 I-Beam, X Type Member in Center	5 I-Beam, X Type Member in Center	5 I-Beam, X Type Member in Center
Wheelbase	122"	127"—1701 148"—1702	127"—1703 148"—1705	$134\frac{3}{8}$"—1707 $139\frac{3}{8}$"—1708
FRONT SUSPENSION				
Make	Packard Safe-T-fleX	Packard Safe-T-fleX	Packard Safe-T-fleX	Packard Safe-T-fleX
Type	Independent Parallelogram	Independent Parallelogram	Independent Parallelogram	Independent Parallelogram
Axle End	Reverse Elliot	Reverse Elliot	Reverse Elliot	Elliot
Steering Knuckle Pin Bushing Upper and Lower	Steel Backed Bronze .867 x 1.058" x $1\frac{3}{16}$" Long	Steel Backed Bronze .867" x 1.058" x $1\frac{3}{16}$" Long	Steel Backed Bronze .867" x 1.058" x $1\frac{3}{16}$" Long	Oilite 1.054" x 1.246" $1\frac{1}{4}$" Long
Caster	$1\frac{1}{2}$° + — $\frac{1}{2}$°	$1\frac{1}{2}$° + — $\frac{1}{2}$°	0° + — $\frac{1}{2}$°	0° + 0° — $\frac{1}{2}$°
Front Wheel Toe-In	0" + $\frac{1}{16}$" — 0"	0" + $\frac{1}{16}$" — 0"	0" + $\frac{1}{16}$" — 0"	$\frac{1}{16}$" + $\frac{1}{16}$" — 0"
Knuckle Pin Angle	1° 54′	1° 54′	1° 54′	1° 30′
Tread	$59\frac{3}{16}$"	$59\frac{3}{16}$"	$59\frac{3}{16}$"	$60\frac{1}{4}$"
Camber	$\frac{1}{2}$° + $\frac{3}{4}$° — 0°	$\frac{1}{2}$° + $\frac{3}{4}$° — 0°	$\frac{1}{2}$° + $\frac{3}{4}$° — 0°	1° + — $\frac{1}{4}$°
Wheel Bearing—Inner	Timken 2585 Cone 2523 Cup	Timken 2585 Cone 2523 Cup	Timken 2585 Cone 2523 Cup	Timken 3383 Cone 3320 Cup
Wheel Bearing—Outer	Timken 1380 Cone 1329 Cup	Timken 1380 Cone 1329 Cup	Timken 1380 Cone 1329 Cup	Timken 2687 Cone 2620 Cup
Wheel Bearing Adjustment	Tighten Nut and Back Off $\frac{1}{2}$ Turn and Lock	Tighten Nut and Back Off $\frac{1}{2}$ Turn and Lock	Tighten Nut and Back Off $\frac{1}{2}$ Turn and Lock	Tighten Nut and Back Off $\frac{1}{2}$ Turn and Lock
STEERING GEAR				
Make	Packard	Packard	Packard	Packard
Type	Worm and Double Tooth Roller	Worm and Double Tooth Roller	Worm and Double Tooth Roller	Worm and Double Tooth Roller
Steering Wheel	18"—3 Spoke	18"—3 Spoke	18"	$18\frac{1}{2}$"
Ratio	20.19 to 1	20.19 to 1	20.19 to 1	20.5 to 1
Type of Steering Wheel	Vulcanized Rubber Over Steel Frame	Vulcanized Rubber Over Steel Frame	Vulcanized Rubber Over Steel Frame	Vulcanized Rubber Over Steel Frame, Damped
Minimum Turning Radius	21 ft. 0 in	1701—21 ft. 6 in. 1702—26 ft. 6 in.	1703—21 ft. 6 in. 1705—26 ft. 6 in.	1707—24 ft. 1708—24 ft. 6 in.
ELECTRICAL				
Battery—Make	Willard—15 Plate	Hi Level Prest-O-Lite Delco—17 Plate	Hi Level Prest-O-Lite Delco—17 Plate	Hi Level Prest-O-Lite 21 Plate
Battery—Capacity	95 Ampere Hours	114 Ampere Hours	114 Ampere Hours	150 Ampere Hours
Battery—Size	9" x 7" x $8\frac{13}{16}$"	$10\frac{3}{8}$" x 7" x $8\frac{3}{4}$"	$10\frac{3}{8}$" x 7" x $8\frac{3}{4}$"	13" x 7" x $9\frac{3}{16}$"
Ignition Timing	6° BTDC	8° BTDC	7° BTDC	6° BTDC
Breaker Point Gap	.018"—.022"	.0125"—.0175"	.0125"—.0175"	.018"—.022"
Spark Control	Full Automatic	Full Automatic	Full Automatic	Full Automatic
Spark Advance Begins At	600 r.p.m. Engine	600 r.p.m. Engine	600 r.p.m. Engine	600 r.p.m. Engine
Distributor	Autolite IGS-4013	Autolite IGT-4007	Autolite IGT-4006	Autolite IGO-4002-A
Spark Plug—Size	10 mm.	10 mm.	10 mm.	10 mm.
Spark Plug—Make and Type (2)	103 AC or Champion Y4	103 AC or Champion Y4	103 AC or Champion Y4	103 AC or Champion Y4
Spark Plug Gap	.0255"—.0305"	.0255"—.0305"	.0255"—.0305"	.0255"—.0305"
Generator—Make and Type	Autolite GC J-4807-A-2	Autolite GC J-4807-A-2	Autolite GC O-4803-A	Autolite GC E-4803-A
Generator Drive	Belt	Belt	Belt	Belt
Generator Cut-In Speed—Cold	710 r.p.m.	710 r.p.m.	800 r.p.m.	700 r.p.m.
Generator Maximum Charging Rate—Cold (8 Volt)	30.5 Ampere	30.5 Ampere	28 Ampere	30 Ampere
Generator Maximum Charging Rate—Hot (8 Volt)	25.5 Ampere	25.5 Ampere	28 Ampere	30 Ampere
Generator Voltage Regulator	Autolite VRD-4001	Autolite VRD-4001	Autolite VRB-4012	Autolite VRB-4008
Generator Voltage to Close Cut-Out	$6\frac{1}{2}$ to $7\frac{1}{4}$ Volts	$6\frac{1}{2}$ to $7\frac{1}{4}$ Volts	$6\frac{1}{2}$ to 7 Volts	$6\frac{1}{2}$ to 7 Volts
Generator Ventilated	Yes	Yes	Yes	Yes
Starter Motor—Make and Type	Autolite MAW-4018	Autolite MAW-4018	Owen-Dyneto DI-1568	Owen-Dyneto DN-1389

PackardInfo.com

NAME	1700	1701-1702	1703-1705	1707-1708
ELECTRICAL—Continued				
Starter Drive	Bendix Shift	Bendix Shift	Bendix Shift	Bendix Shift
No. of Flywheel Teeth	140	140	148	118
No. of Teeth in Bendix Pinion	9	9	9	10
Pinion Meshes	From Front	From Front	From Front	From Front
Light Control	On Instrument Board and Foot Switch	On Instrument Board and Foot Switch	On Instrument Board and Foot Switch	On Instrument Board and Foot Switch
Headlamp Current Protection	Thermostat Relay	Thermostat Relay	Thermostat Relay	Thermostat Relay
Auxiliary Fuse	25 Volt, 20 Ampere	25 Volt, 20 Ampere	25 Volt, 20 Ampere	Thermostat Relay
Body Fuse	25 Volt, 20 Ampere	25 Volt, 20 Ampere	25 Volt, 20 Ampere	Thermostat Relay
Tail Lamp Fuse	25 Volt, 20 Ampere	25 Volt, 20 Ampere	25 Volt, 20 Ampere	25 Volt, 20 Ampere
Stop Light Fuse	25 Volt, 20 Ampere	25 Volt, 20 Ampere	25 Volt, 10 Ampere	25 Volt, 20 Ampere
Headlamp Lens—Dia. at Bezel	7"	7"	6½"	7¼"
Headlamp Bulb—C. P. and Mazda No.	32-32 Mazda No. 2330L	32-32 Mazda No. 2330L	32-32 Mazda No. 2330L	32-32 Mazda No. 2330L RT
Export	50-32 Mazda No. 1104 C. M. Hall	50-32 Mazda No. 1104 C. M. Hall	50-32 Mazda No. 1104 Guide	50-32 Mazda No. 1104LT C. M. Hall
Horn—Make and Type	Sparton	Sparton	Sparton	Sparton
Horn—Location	Mounted on Engine	Mounted on Engine	Mounted on Engine	Mounted on Engine
Battery Terminal Grounded	Positive	Positive	Positive	Positive
Ampere Draw of Horns (2)	22-25 Ampere	22-25 Ampere	22-25 Ampere	22-25 Ampere
Ampere Draw of Car Heater Motor	3 Ampere at 6 Volts	3 Ampere at 6 Volts	3 Ampere at 6 Volts	3 Ampere at 6 Volts
Ampere Draw of Lights	10 Ampere	10 Ampere	10 Ampere	12 Ampere
Ampere Draw of Coil—Idling	½ Ampere	½ Ampere	½ Ampere	½ Ampere
Ampere Draw of Coil—Stopped	2½ Ampere	2½ Ampere	2½ Ampere	2½ Ampere
Clock—Make and Type	Electric—Borg	Electric—Borg	Electric—Borg	Electric—Jaeger
Cigar Lighter—Type	Automatic	Automatic	Automatic	Automatic
Starter Stall Torque	12 ft. lbs., 3.4 volt 525 Ampere	12 ft. lbs., 3.4 volt 525 Ampere	25 ft. lbs., 3.6 volt 700 Ampere	39 ft. lbs., 2.9 volt 610 Ampere
Ignition Coil	Autolite CE-4632 on Cylinder Head	Autolite CE-4632 on Cylinder Head	Autolite CE-4026 on Horn Bracket on Cylinder Head	2 Autolite CE-1203 on Gear Cover
Spring Tension on Contacts—Distributor	19-23 Oz.	19-23 Oz.	19-23 Oz.	15-19 Oz.
COOLING SYSTEM				
Water Pump	Centrifugal Self-adjusting	Centrifugal Self-adjusting	Centrifugal	Centrifugal
Water Pump Drive	Fan Belt	Fan Belt	Fan Belt	Fan Belt
Radiator Core	Cellular	Cellular	Tubular	Tubular
Radiator Shell	One-piece Stamping	One-piece Stamping	One-piece Stamping	One-piece Stamping
Capacity of System	3-8/10 Gal.	4 Gal.	5½ Gal.	10 Gal.
Fan	4 Blade 18"	4 Blade 18"	5 Blade 18½"	4 Blade 21"
Driving Pulley	On Crankshaft	On Crankshaft	On Crankshaft	On Crankshaft
Ratio	.963 to 1	.963 to 1	.951 to 1	.975 to 1
Thermostat Starts to Open	135°	135°	135°	135°
Radiator Shutter	Yes	Yes	Yes	Yes
Fan Belt	49¼" O.D. x ¾" x 42°	49¼" O.D. x ¾" x 42°	48⅝" O. D. x 1" x 42°	50½" O. D. x ¾" x 47° Dual
Radiator Hose—Inlet	7½" x 1¾" I. D.	7½" x 1¾" I. D.	5⅝" x 1¾" I. D.	11 7/16" x 1½" I. D. 12 9/16" x 1½" I. D.
Radiator Hose—Outlet	3" x 1¾" I. D.	3" x 1¾" I. D.	4¾" x 2" I. D.	7¾" x 2" I. D.
Heat Indicator	On Instrument Board	On Instrument Board	On Instrument Board	On Instrument Board
Fan Belt Adjustment	At Generator	At Generator	At Generator	At Generator
Gravity Flow of Radiator	36.65 Gal. per Min.	38.5 Gal. per Min.	38 Gal. per Min.	40 Gal. per Min.
GASOLINE SYSTEM				
Carburetor—Make and Size	Chandler-Grove 1¼" Down-draft, Single Barrel	Stromberg 1" Duplex Down-draft	Stromberg 1¼" Duplex Down-draft	Stromberg 1½" Duplex Down-draft
Gasoline Feed	Mechanical Pump A.C. with Vacuum Pump	Mechanical Pump A.C. with Vacuum Pump	Mechanical Pump A.C. with Vacuum Pump	Mechanical Pump A.C. with Vacuum Pump
Pump Drive	Off Camshaft	Off Camshaft	Off Camshaft	Off Camshaft
Gasoline Filter	In Fuel Pump	In Fuel Pump	In Fuel Pump	Visible Screen Type
Gasoline Gauge	Electric	Electric	Electric	Electric
Gasoline Tank Capacity	18 Gal.	21 Gal.	21 Gal.	30 Gal.
Carburetor Heat Control	Thermostat	Thermostat	Thermostat	Fixed

PackardInfo.com

NAME	1700	1701-1702	1703-1705	1707-1708
Air Cleaner and Silencer	Optional—Oil Bath Type	A.C.—Oil Bath Type	A.C.—Oil Bath Type	A.C.
Automatic Choke	Thermostatically Controlled Unit Construction	Thermostatically Controlled	Thermostatically Controlled	Thermostatically Controlled
Carburetor Fuel Level	$\frac{17}{32}$" Below Top of Bowl	$\frac{15}{32}$" Below Top of Bowl	$\frac{5}{8}$" Below Top of Bowl	$\frac{9}{16}$" Below Top of Bowl
REAR AXLE				
Type	Semi-floating	Semi-floating	Semi-floating	Angleset—Semi-floating
Make	Packard	Packard	Packard	Packard
Final Drive	Hypoid Gears	Hypoid Gears	Hypoid Gears	Hypoid Gears
Propulsion	Through Springs	Through Springs	Through Springs	Through Springs
Axle Housing	Pressed Steel—Banjo Type	Pressed Steel—Banjo Type	Pressed Steel—Banjo Type	Pressed Steel—Banjo Type
Universal Joints	"Mechanics" Roller Bearing Type	"Mechanics" Roller Bearing Type	"Mechanics" Roller Bearing Type	"Spicer" Roller Bearing Type
No. Required	2	2	2	2
Oil Capacity	6 Pints	6 Pints	6 Pints	6 Pints
Wheel Bearings	Timken Cone 26878 (2) Cup 26830 (2)	Timken Cone 26878 1701 Cup 26830 1701 Timken Cone 3576 1702 Cup 3525 1702	Timken Cone 26878 1703 Cup 26830 1703 Timken Cone 3576 1705 Cup 3525 1705	Timken—(4) Cone 359; Cup 354
Tread	60"	60"—1701 62.5"—1702	62.5"—1703 62.5"—1705	61"
Standard Gear Ratio (Without Overdrive)	4.54 to 1	4.36 to 1—1701 4.7 to 1—1702	4.36 to 1—1703 4.54 to 1—1705	4.41 to 1
Pinion Backlash	.003"-.005"	.003"-.005"	.003"-.005"	.003"-.005"
No. Teeth—Gear and Pinion	50-11	48-11—1701 47-10—1702	48-11—1703 50-11—1705	75-17
Oil Drain Plugs	½"—14 Pipe	½"—14 Pipe	½"—14 Pipe	1¼"—18 Flange
SPRINGS				
Front—5 Passenger Sedan	1550 x 72 Rate—Coil	1600 x 77 Rate—Coil 1701 1925 x 95 Rate—Coil 1702	1750 x 77 Rate—Coil 1703 2125 x 110 Rate—Coil 1705	2325 x 120 Rate—Coil 1707 2325 x 120 Rate—Coil 1708
Rear—5 Passenger Sedan	1025 x 110 Rate—Leaf	1075 x 115 Rate—Leaf 1701	1150 x 115 Rate—Leaf 1703	1400 x 150 Rate—Leaf 1707
7 Passenger Sedan	—	1350 x 135 Rate—Leaf 1702	1350 x 127 Rate—Leaf 1705	1500 x 150 Rate—Leaf 1708
Front—Size	5.8" O. D.; 4½" I. D.	5.81" O. D.; 4½" I. D. 1701 5.87" O. D.; 4½" I. D. 1702	5.81" O. D.; 4½" I. D. 1703 5.92" O. D.; 4½" I. D. 1705	5.7" O. D.; 4¼" I. D.
No. of Coils	8.5 Effective	8.41 Effective—1701 7.96 Effective—1702	8.41 Effective—1703 7.75 Effective—1705	8$\frac{11}{16}$" Effective
Rear—Length and Width	54" x 2"	54" x 2"	54" x 2"	60½" x 2¼"
Shackles	Rubber Bushed	Rubber Bushed	Rubber Bushed	Lower—Threaded Type Upper—Rubber Bushed
Spring Covers	No	No	No	Metal on Rear Springs
Shock Absorbers	Delco Hydraulic Two-Way	Delco Hydraulic Two-Way	Delco Hydraulic Two-Way	Delco Hydraulic Two-Way
Shock Absorber (Lateral Stabilizer)	Houde Two-Way	Houde Two-Way	Houde Two-Way	—
Shock Absorber Stabilizer	Rear Only	Rear Only	Rear Only	Front and Rear
Lateral Stabilizer	Standard Equipment	Standard Equipment	Standard Equipment	Standard Equipment
Spring Material—Front and Rear	Silico Manganese	Silico Manganese	Silico Manganese	Silico Manganese
BRAKES				
Type	Internal Expanding 4 Wheels	Internal Expanding 4 Wheels	Internal Expanding 4 Wheels	Internal Expanding 4 Wheels
Operation	Hydraulic—2 Shoe	Hydraulic—2 Shoe	Hydraulic—2 Shoe	Hydraulic—2 Shoe
Effective Area	168 sq. in.	182 sq. in.—1701 234 sq. in.—1702	234 sq. in.—1703-5 260 sq. in.—1703-A	330 sq. in.
Effective Area Hand Brake	84 sq. in.	91 sq. in.—1701 117 sq. in.—1702	117 sq. in.—1703-5 130 sq. in.—1703-A	165 sq. in.
Size of Lining	1¾" x $\frac{3}{16}$" x 12"	1¾" x $\frac{3}{16}$" x 13"—1701 2¼" x $\frac{3}{16}$" x 13"—1702	2¼" x $\frac{3}{16}$" x 13"—1703-5 2½" x $\frac{3}{16}$" x 13"—1703-A	2¾" x ¼" x 15"
Material—Primary	Marshall No. 2201	Marshall No. 2201—1701 U. S. Asb. No. 714—1702 U. S. Asb. No. 714—1701-A	U. S. Asb. No. 714—1703-5 Marshall Asb. No. 1035—1703-A	No. 451 Raybestos
Material—Secondary	Marshall No. 2201	Marshall No. 2201—1701 U. S. Asb. No. 589—1702 U. S. Asb. No. 589—1701-A	U. S. Asb. No. 589—1703-5 Marshall Asb. No. 600—1703-A	No. 589 U. S. Asb.
Drum—Diameter	11" Centrifuse	12" Centrifuse	12" Centrifuse	14" Centrifuse
Vacuum Booster	None	None	None	Yes

Packardinfo.com

NAME	1700	1701-1702	1703-1705	1707-1708
WHEELS				
Make	Motor Wheel Demountable Disc (Steel Artillery Wheel Special Equipment)	Motor Wheel Demountable Disc (Steel Artillery Wheel Special Equipment)	Motor Wheel Demountable Disc (Steel Artillery Wheel Special Equipment)	Motor Wheel Demountable Disc
Size of Tire	16 x 6.50—4 ply	16 x 7.00—4 ply—1701 16 x 7.00—6 ply—1702	16 x 7.00—4 ply—1703 16 x 7.00—6 ply—1705	16 x 8.25—6 ply
Recommended Tire Pressure—Cold Front Rear	 22 24	 1701—22; 1702—24 1701—24; 1702—27	 1703—24; 1705—26 1703—25; 1705—29	 1707-8—26 1707—27; 1708 Conv. Sedan 27; 1708 Sed. and Limo. 29
BODY				
Make	Packard	Packard	Packard	Packard
Panel Material	Steel	Steel	Steel	Steel
Upholstery Material: Closed Cars Convertible Cars	 Broadcloth Colonial Grain Leather	 Broadcloth Colonial Grain Leather	 Broadcloth Hand-Buffed Leather	 Broadcloth Hand-Buffed Leather
Glass	Safety	Safety	Safety	Safety
Windshield Wiper (Vacuum Type)	Tandem with Vacuum Booster	Tandem with Vacuum Booster	Tandem with Vacuum Booster	Tandem with Vacuum Booster
Radio Antenna	Left Side Cowl Accessory	Left Side Cowl Accessory	Left Side Cowl Accessory	Built in Roof
Built-in Trunk***	Yes	Yes	Yes	Yes
Radio Lead-in Location	None	None	None	**Left Front Pillar
Spare Wheel Location—R	Rear Compartment	Rear Compartment	Rear Compartment Except Coupe	Rear Compartment Except Coupe
Top Type	Metal	Metal	Metal	Fabric
Trunk Rack	Special Equipment	Special Equipment	Special Equipment	Special Equipment

**Radio lead-in on 1707-8 is in left front pillar on all closed jobs except limousines where lead-in enters trunk compartment on right side.
***Trunk or rear compartment.

PackardInfo.com

COMPLETE CAR SHIPPING WEIGHTS

1700	1701	1702	1703	1705	DELUXE EQUIPPED 1707	DELUXE EQUIPPED 1708	PASSENGER	TYPE OF BODY
3400	3605		3930		5670		5	Touring Sedan
3390	3595						5	Touring Sedan (2 Door)
3365	3535		3860		5400		2-4	Club Coupe
3385	3545		3870		5540		2-4	Convertible Coupe
3295	3490						2	Business Coupe
	3780		4005			5890	5	Convertible Sedan
		4100		4425		5750	7	Touring Sedan
		4185		4510		5825	7	Touring Limousine
					5745		5	Formal Sedan
					5590		5	Club Sedan
					5425		5	Coupe
					5570		5	Victoria
2406	2604	2850	3000	3140	3920	3975		Chassis

MODELS	1700	1701	1702	1703	1705	1707	1708
Wheelbase	122"	127"	148"	127"	148"	134 3/8"	139 3/8"
Over-all Length—Bumper to Bumper	196 5/16"	200 13/32"	221 13/32"	201 21/32"	222 21/32"	223 13/32"	228 13/32"
Over-all Length—Bumper to Bumper with Trunk Rack	200 7/16"	204 31/32"	225 31/32"	205 31/32"	226 31/32"	225 25/32"	230 25/32"
Over-all Height (Loaded)	68 3/16"	68 7/16"	68 3/4"	68 7/16"	68 3/4"	70 7/8"	70 15/16"
Over-all Width—Front Rear	73 11/16" 73"	73 11/16" 73"	73 11/16" 75"	73 11/16" 73"	73 11/16" 75"	74 3/4"	74 3/4"

SUGGESTIONS OR QUESTIONS ARE ALWAYS WELCOME. ADDRESS — THE EDITOR, PACKARD SERVICE LETTER

PACKARD MOTOR CAR COMPANY, DETROIT, MICHIGAN

PRINTED IN U. S. A.