SERVICE MANAGER'S
PERSONAL COPY

PACKARD SERVICE LETTER

Packard Service

VOL. 16, NO. 17 SEPTEMBER 1, 1942

IS THE CUSTOMER ALWAYS RIGHT?

The answer to this question may be either "yes" or "no," there being plenty of arguments in favor of either answer.

It may be contended that at the time the slogan was adopted in such stores as Marshall-Field's and John Wannamaker's, it was a necessary step in the progress of merchandising; that because of the methods used up to that time, some very drastic action had to be taken to convince the customer it was safe for him to deal with you.

It might be contended that the policy has been continued for so long the interpretation of it has become illogical. To a large number of people such a policy works entirely to their advantage.

We do know, of course, that there are several distinct advantages on the "yes" side of this argument. We may say that the increase in business, as a result of treating the customer in this way, far offsets any amount which the dishonest customer will accept on adjustments which are unfair to the service department. We may further say that the slogan should still apply in our particular line of work, since even today all customers have not been brought to the point where they can thoroughly trust the service organization with which they deal.

When the customer enters the service station, we should assume that what he is about to tell us concerning his car, or the bill which we recently rendered him, or the work we recently did for him, is based upon the conviction which he has in his own mind that he is right. This customer may be just as wrong as he can be, but if your adjustment is made against him while he firmly believes that he is right, then you are just as wrong as you can be.

The one thing to get across to the customer is the fact that you are just as interested as he is in getting the thing settled. He cannot hold out in rage against you for a long period of time, if you convince him at the start that you want more than anything else to have the matter that he has brought to your attention settled.

The best thing to do, is to get all the cards on the table as quickly as possible, by all means let him play his hand first and in playing it he undoubtedly will give you some mighty good cards to use while you are playing yours.

Most Americans have a few drops of sporting blood in their system. They are willing to concede something and they have more or less of a sense of fair play, however, they do not want to be argued with, nor combated. Never *argue* your side of the case, do only one thing after listening to his story and that is *explain* your side of the case, then tell him quickly and plainly what you feel you should do about it.

If he wants to start an argument, ask him to place himself in your position, consider both sides, and determine what adjustment he would make. If you find the whole controversy cannot be settled with reasonable speed, pick out a few items which can be, and settle on these. Above all, keep in mind the fact that good will is important in service selling.

The customer is not always right, but he is nearly always honest in his claim, when he isn't, you can generally detect it and when he is, give him credit for honestly trying to get what he believes he is entitled to.

In making any adjustment, make it with the idea of breaking down the barriers of mistrust which has grown up in the customer's mind. Any adjustment which sends the customer away with the conviction that he has been treated fairly, and after all that is all he wants, is not only money well spent, but money which will sooner or later come directly back to you.

PackardInfo.com

"CAR HEALTH" CHECKS WITH GAS RATIONING

Unfortunately we got off to rather a slow start as at the time the program was originated we had all we could do to handle the customer work which was piling in on us, and had very little time to use the Car Health Check system. Now we wish we had however as subsequent experience has proven, this program is one of the best Service Sales aids we have ever used. Customers like the idea and our Service Men are more and more sold on the advantages of the program each week.

To date we have written approximately 55 Health Checks and sold about $425 of extra service work with them. During the past 10 days we have written only about 12 Health Checks from which we secured $105 of business

Stamford, Connecticut

For the Month of July

Letters sent out	492
Telephone calls	196
Inspections	65
Repair Orders Written	39
Total business	$727.96
Average	18.64

This Packard Wartime Service Plan, has contributed greatly to the maintenance of our Service volume, and has brought a great many Packard Owners to our Service Station, who have not been in for three months or more.

Brooklyn, N. Y.

Of the 48 cars we applied the Health Check to, we have completed 16, and have four in process of completion. The majority of these completed were regular Packard owners and customers. We are particularly pleased with the volume of business—$60.29, $49.50, $35.00 and $45.60 being the general run of the rapair orders.

We appreciate the Packard Health Check not only for the immediate business we have gained, but we feel that it will tend to preserve future business.

Meriden, Connecticut

Covering thirty-one actual working days of this plan from June 20th to July 31st inclusive.

Letters mailed out	363
Follow up Telephone Contacts	144
No. of inspections	51
Total Number of Jobs Sold	31
Billings	$662.97
Average per R. O.	21.38

Newark, N. J.

Starting in April with a mild sort of interest, as our shop had been busy, we soon found that the gasoline rationing changed this condition so we turned more attention to the Health Checks with the following results.

1. Have made fifty-three Health Checks.
2. Have sold thirty repair orders from Health Checks.
3. Total dollar amount $1176.60
4. Average per health check made $22.20
5. Average per health checks sold $39.22

We feel that the Health Check is good for the customer and gives us additional work without overselling as most items are visible or mileage items. Most customers appreciate knowing the condition of their car and want any necessary work done to prolong its life.

Waterbury, Connecticut

We have "Health Checked" 81 cars of which 54 were actually sold amounting to approximately $1600.00, or an average of approximately $30.00 per Health Check. We feel reasonably sure that some of those already made will undoubtedly result in future business.

About a week ago we put on a special two-day campaign which resulted in a writeup of 8 Health Checks, 4 of which amounted to $432. or an average of $108.00 per Health Check.

We believe that the Health Check System has been one of the best mediums we have used to not only maintain our service volume; but to increase our July business over June and at the same time assuring us of future business as a result of its use.

New Haven, Connecticut

Some figures that were taken from our July records at 11th Avenue and 54th Street.

Letters sent out with sample of Health Check form	832
Telephone follow-up calls	312
Inspections made	164
Jobs secured	119
Amount	$2712.32
Average per job	$ 22.79

The Health Check Plan has been instrumental in helping us build up our average per repair order, and it has also brought in owners who would not have come in otherwise. It is the best means we know of to bring forcibly to an owner's attention any maintenance work necessary for economical and satisfactory car operation for the "duration."

New York City, N. Y.

PackardInfo.com

PARTS FOR DIRECT ACTING REAR SHOCK ABSORBERS

Rear Shock Absorbers of the direct acting type have been supplied to us by both Monroe and Delco, and our Master Parts Book has listed the details with the part numbers of the manufacturer who supplies them.

Even though the Monroe and Delco parts are listed separately they are interchangeable and can be used in either shock absorber. We will, in the future, carry these parts under Packard part numbers. The illustration and the accompanying list indicate the parts and the new Packard numbers.

Shock absorber assemblies and valves have always been carried under Packard numbers.

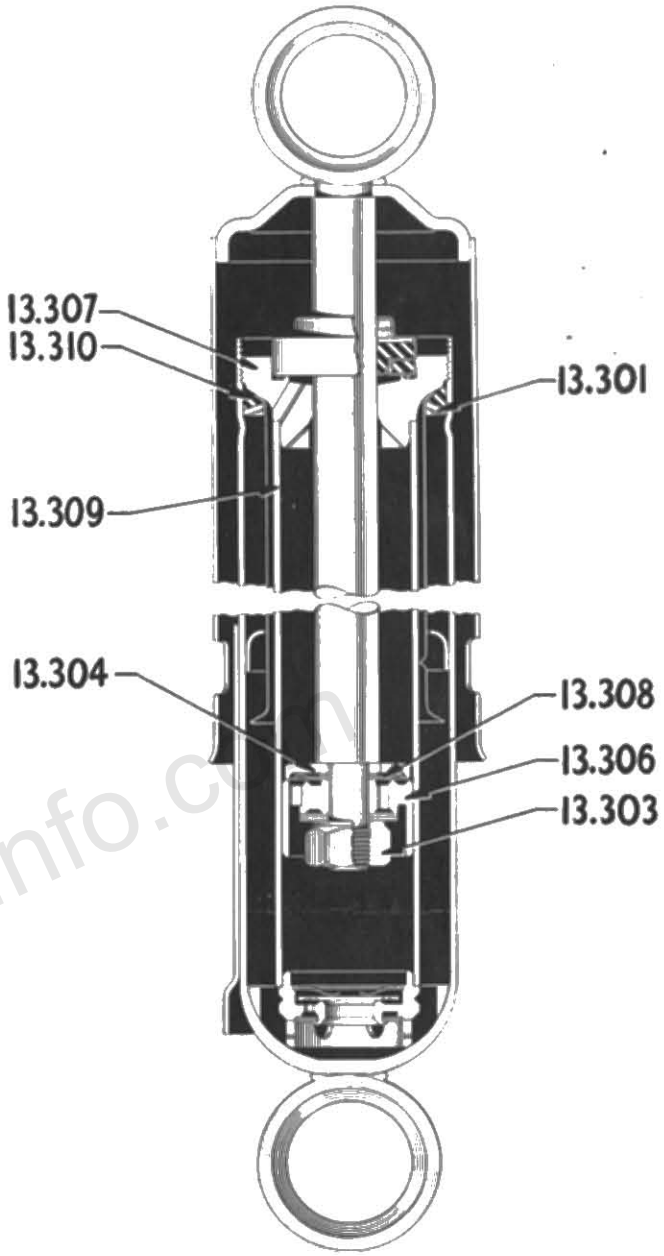

SHOCK ABSORBER—REAR

	Monroe	*Delco*	*Index No.*	*No. Reqd.*
378522—S. A. Reservoir Gasket Support Washer	10874	5312156	13.301	2
378523—S. A. Piston Rod Nut	12410	5352264	13.303	2
378524—S. A. Support Washer	10853	5329293	13.304	2
378526—S. A. Piston	10966	5315850	13.306	2
378527—S. A. Piston Rod Guide and Seal	12406	5340582	13.307	2
378528—S. A. Piston Support Washer Spacer	10854	5329294	13.308	2
378529—S. A. Pressure Tube	10956	5304092	13.309	2
378530—S. A. Reservoir Tube Gasket	10875	5302396	12.310	2

PackardInfo.com

AXLE SHAFT OIL LEAKS

There are several possible causes for leakage of the differential lubricant past the leather seal around the axle shaft.

In correcting such a leak you should first try to determine the cause. If you simply replace the leather seal without an investigation, the car may be back again with the same trouble.

First of all, examine the seal which is removed. If the contact surface is cut or damaged, you have probably found the trouble. After the new seal has been installed, the replacement of the axle shaft should be made with great care. The sharp edges of the splines on the inner end of the shaft can easily cut the leather if the shaft is carelessly installed.

Make sure that there is no end play in the axle shaft and that the brake backing plate bolts are tight. Either of these conditions can cause oil leakage even if the leather seal is normal.

See that the air vent on the axle tubing is clear. A blocked vent will cause a build-up in pressure, and may force the oil past the seal. Of course, you would make sure that the oil level in the differential is not too high.

Sometimes, leakage may be caused by a foaming condition in the lubricant itself. Foaming is hard to detect because it is intermittent, and may not be in evidence when the oil is examined. If you have carefully checked the items mentioned and the leakage continues we suggest that you try another differential lubricant.

CLUTCH PEDAL ADJUSTMENT

It is very important to check the free play in the clutch pedal. (It should not be over 1½" to 2").

It has always been necessary to watch the pedal position. In early cars wear in the clutch plate caused the pedal to come back toward the driver and it was necessary to make sure that it did not ride the floorboard. This, of course, would cause slippage.

In recent years the change in pedal position has reversed itself. Wear in the linkage is apt to be greater than wear in the plate. This means that the pedal goes down instead of coming up, so that the amount of useful travel is reduced. It may be reduced to a point where the clutch is not properly released when the pedal is pushed down.

There are several serious consequences which may develop if the clutch does not release sufficiently. One of these is the transmission sticking in gear. When an attempt is made to shift without fully releasing the clutch, the gears drag, and the shifter lever may reach the neutral position before the gears move out of engagement.

Another serious consequence is damage to the transmission. If the driver will not wait for the clutch to stop spinning, and attempts to "clash" into first or reverse, he is almost sure to damage the gears. This is no fault of the gears themselves.

In checking pedal adjustment particular attention should be paid to cars in which the driver is of less than average height. In such cases the pedal should be brought up as high as it is safe to go, and if necessary, the front seat should be relocated in order to give the driver a better chance to operate the pedal.

Do not overlook the fact that the pedal position is just as important in cars equipped wih the electromatic clutch. In driving a car which is so equipped the operator does not use the pedal and may miss the fact that it is improperly adjusted.

DAMAGE TO TRANSMISSION GEARS IN SHIFTING

In the article above we have just pointed out that the transmission gears may be seriously damaged if an attempt is made to "clash" the gears into mesh without dis-engaging the clutch, or before the clutch stops spinning.

The arrow "A" points to the rear end of the teeth on the first speed sliding gear. When the teeth are battered or chipped at this point it is because an attempt has been made to jam the gears into reverse while the clutch is still spinning, or while the car is rolling forward.

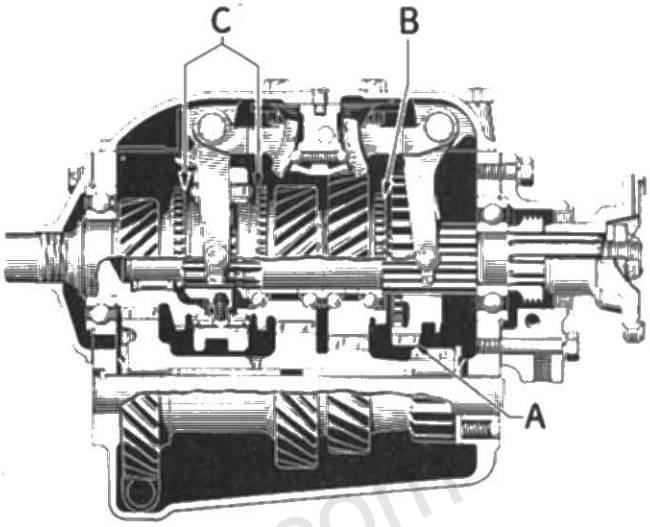

When the teeth of the first speed sliding gear are found to be damaged, a similar condition will be found on the teeth of the reverse pinion (not shown in the illustration). The ends of the teeth are sometimes simply battered, but in other cases entire sections of the teeth may be broken out.

Arrow "B" indicates the points where the internal teeth in the first speed gear engage with the first speed clutch on the drive shaft. If the teeth are damaged at this point, it is because the operator has attempted to shift into first speed without waiting for the gears to stop spinning.

It is easy to show that this damaged gear condition is the result of carelessness or rough treatment by using the second and third speed clutch gears for a comparison. (These gears are indicated by arrow "C.") All three clutch gears are exactly the same in design and material; but the second and third speed gears (C) are protected by the synchronizers, while the first speed gear (B) must depend on the driver for the treatment it receives.

If therefore, the second and third speed clutch gears are in excellent condition (as is almost always the case), any damage which the first speed clutch gear or sliding gear have suffered is due to the treatment received. The responsibility is that of the owner.

PRINTED IN U. S. A.