VOL. 16, NO. 9 MAY 1, 1942

PACKARD BLUE CORAL TREATMENTS A NATION-WIDE DRIVE

Packard is now promoting the sale of Blue Coral Treatments. We have endeavored for some time to find a material that would protect the finish and restore the high new car lustre. We wanted a product that would be exclusive from a sales stand point, one with an appealing name and one that would produce more in the way of profits than could be obtained from just the sale of a polish.

Most polish jobs on the market can be bought from any repair shop, storage garage or gas station, and usually at a lower cost than you can sell them. Competition has often made this type of work unprofitable.

In Packard Blue Coral Treatments we have the answer to this problem. It cannot be purchased through jobbers and outside sources. It is exclusive to car dealers.

It is particularly worth while at this time because it represents a very salable item. It requires no large investment in shop equipment. It requires no large inventory. It requires no technically skilled labor. The gross profit on this Treatment is very satisfactory because most of it is derived from the sale of labor.

Promotion material is being supplied without charge on your initial orders. There are mailing folders, large eight-foot banners and easel cards for "spot cars."

Two things are important—first, talk and sell Packard Blue Coral Treatments. It is more than a polish and should not be sold as such. Second, display both the material and your equipment. Locate your "Treatment" department where customers can see it. Display both the attractive Blue Coral bottle and white jar of sealer.

Packard Blue Coral Treatments are neither a polish job, a wax, nor a cleaner. It is a finish restorative and protective treatment. It removes the dirt and traffic film and gets down to the lacquer. It burnishes the finish, restoring its original color and all of the remaining lustre. It does not add any finish. It restores and protects. It leaves a hard, smooth bright finish, completely dry. There is no layer of polish or wax left on the finish. There is simply a restored finish sealed against dirt.

One application lasts from 2 to 5 times as long as other materials. Washing will not dull it.

Packard Blue Coral Treatments are not just the sale of a bottle of polish—it's a complete beauty treatment—it should include:

1. Thorough washing of car.
2. Touch up rust spots.
3. Application of Blue Coral and Sealer
4. Cleaning and Vacuuming interior.
5. Dressing top where needed.

This type beauty treatment should sell for

SIX	$10.50 to $12.50
EIGHT	12.50 to 15.00
SUPER-8	15.00 to 18.00

Every Packard Distributer and Dealer should plan to start this program at once—it's timely—it's profitable.

WHAT DOES THE CUSTOMER WANT?

Another article on handling Packard Service by R. B. Parker, General Manager of Packard-Philadelphia.

ALL NECESSARY WORK DONE, BUT NO NONESSENTIAL

Repairs are not something a man enjoys buying. He wants all the adjustments and repairs essential to the maintaining of his car in good operating condition, but no more.

It is understandable that a shop whose only income is derived from the sale of repairs and supplies may lean toward advising repairs which are really unnecessary, even if, as a result of such *over*-selling, the *car* may suffer in the estimation of its owner. Our policy must be built around the hope of some day selling the owner another Packard—and toward that end low cost of mechanical upkeep we know to be a most influencing factor.

The customer does not want us to recommend an extensive repair job when an inexpensive adjustment will suffice. As the question often arises as to whether, in making a minor adjustment or repair, we may be criticized for failing to do the job 100% right, or in recommending the more extensive repair operation, we may become criticized for high costs of maintenance, the pros and cons of the question should be discussed with the customer before proceeding with the work.

Few car owners are mechanically minded, and hence it is a breach of faith to recommend a repair expense to a customer, the necessity for which is not self-evident, without also advising him as to alternatives.

FOR SALE USED PACKARD ENGINE

The Heaton Motor Company of Terre Haute, Indiana, notifies us that they have on hand a used 1936 twelve cylinder engine which they describe as fully equipped and in good condition. They offer it for sale at $100 f.o.b. their city. If interested, write Ren Heaton for further information.

REAR SPRING SQUEAKS— CLIPPER

We are having more complaints about rear spring squeaks on the Clipper than we have had for some time. These squeaks are caused by lack of lubrication around the lead inserts, which are at both ends of the three shortest leaves.

Upon examination it will be noted that the flat surface of the lead insert is scored due to friction with the leaf above. However, this is not where the squeak occurs. The squeak is caused by the insert rocking in the cup which is supposed to be filled with grease.

These cups previously have been made of brass but now are made of steel surrounded with synthetic rubber to hold the grease. It is natural that the steel cup will be more susceptible to squeaks than was the brass.

It is much easier to remove the cup and insert from the three short leaves on the Clipper than it was on previous models, because the leaves are slightly longer, and therefore, easier to spread.

To correct the squeak, remove the cup and insert, lift the insert out of the cup, put a slight amount of EP lubrication in the cup and replace the insert. EP lubricant will last longer than cup grease due to its resistance to high pressure.

Never spray the spring when lubricating the car because if oil gets on the Silenite or rubber inserts between the long leaves, it will destroy them.

IGNITION CUT-OUT

You may have some Econo-Drive equipped cars in which the ignition cuts out and the engine stops when decelerating in Econo-Drive.

This condition may be caused by improper adjustment of the Econo-Drive relay, which is mounted on the front of the dash.

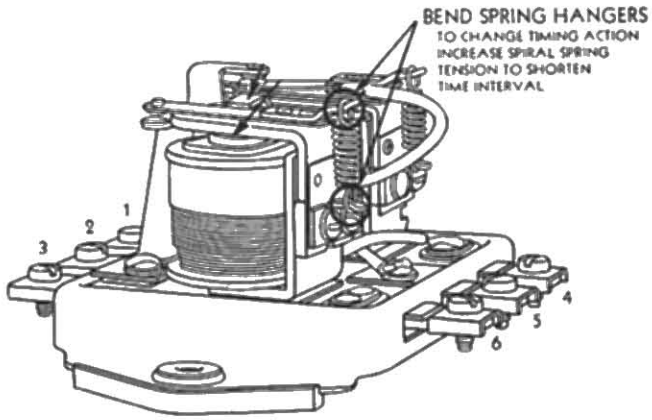

A quick check of the relay may be made by holding the points on the upper coil closed with your finger. This will cause the lower points to close.

When the upper points are released, the lower points should open a split second later. If the lower points fail to open, the spring pressure should be increased by bending the *lower* spring hanger.

Repeat the above check each time after adjusting the spring hanger. It is important that there be a noticable time delay between the opening of the upper and lower sets of points. If the points open together it will be impossible to operate the kickdown feature of the Econo-Drive.

CAR STORAGE BY OWNER FOR SHORT PERIOD

You may receive inquiries from customers as to whether special precautions need be taken if cars are allowed to stand for a few weeks at a time.

If the car will be idle for not more than four to six weeks no special storage precautions need be taken except to make sure that the battery is fully charged and the tires fully inflated.

If the battery is fully charged at the beginning of the period it will not suffer during the six weeks interval; and if the tires are inflated to 35 pounds they will not lose enough air to do any damage. This, of course, is barring the possibility of a slow leak.

The gasoline condition is one on which it is rather hard to give advice. Gasoline develops a gum content in storage, but if the gasoline is "fresh" when the car is laid up, a six weeks interval will not cause trouble.

If, on the other hand, the gasoline is stale at the beginning of the period it may develop an objectionable gum content. Of course the owner can not tell whether the gasoline he purchases is stale or fresh and his only safeguard is to purchase his fuel from a filling station which does enough business so that its storage tanks are frequently replenished.

In general it probably does not pay to go to the trouble of draining the tank, lines and carburetor for a short storage period, but it is well to explain the situation to the customer and leave the option with him.

If an owner decides to take his car out of commission for a longer period a definite storage procedure should be followed. Unless this is done the car may depreciate seriously and this depreciation can easily be greater than if the car were actually in use.

If, therefore, the car is to be taken out of commission we suggest that you use the outline on "Preparing Cars for Storage" which accompanied Mr. Page's letter of February 4, 1942. The treatment of the individual items may vary according to the particular situation, but this is something which can easily be determined if the conditions are known.

VAPOR LOCK

Every year, at the start of the warm weather we have cases of vapor lock. They are caused by the fact that certain filling stations still have a remainder of highly volatile winter gasoline in their tanks.

This difficulty can only be corrected by the use of summer gasoline. Modern cars will not operate properly in hot weather with a winter fuel.

Vapor lock is caused by the fact that the fuel is heated beyond its boiling point. It may, therefore, occur with a winter fuel when the motor and fuel pump are at normal summer temperatures. It may occur even with a summer fuel if the motor and pump are unusually hot.

In checking a vapor lock condition, therefore, the first step is to determine whether the fuel is responsible, by trying another fuel which you know to be giving satisfactory results. This is particularly important in the Spring and early Summer.

If you find that the fuel is not responsible, you should make sure that the motor temperature is normal. This means, first of all, a general checkup of the spark timing, fan belt, water circulation, etc.

Make sure, also, that the heat control is free and the spring is not too tight. A tight spring or a valve which sticks, in the closed position, will cause excessive heat in the manifold and carburetor.

Vapor lock usually occurs when the motor is idled or stopped after the car has been driven at a higher speed. When the motor is stopped, the lack of air circulation causes the temperature to build up and the increased heat may "cook" the gasoline in the carburetor to the point where vapor lock occurs. When this happens, the motor will not start until it cools, or until a cooler fuel has been drawn into the carburetor.

A weak fuel pump may also cause vapor lock, under different conditions. The trouble starts as a high speed miss, which is due to a lean mixture. The lean mixture increases the motor temperature and may start a vapor lock condition in spite of the air circulation. Sometimes the motor will continue to slow down until it stops entirely.

The remedy, of course, is to see that the fuel pump delivers the normal pressure.

SERVICING AIR CONDITIONING UNITS FOR SPRING OPERATION

There are certain instructions that should be followed when cars equipped with air conditioning units have been disconnected for the winter. We would suggest that you reread the instructions issued in April, 1941 and mailed with Service Letter Volume 15, No. 8 of April 15, 1941.

The automobile air conditioning system when placed in service for the summer months should be carefully checked to see that there has been no loss of refrigerant gas from the system due to slow leaks during the winter months when no cooling was required. This check is readily made by slightly cracking the test cock on the side of the liquid receiver under the car. A discharge of milk-like spray indicates a full charge. If there is no discharge except the invisible gas, the system is low in refrigerant and needs recharging. This test should be made only after the compressor has been running not less than 15 minutes.

In the event the above test indicates and insufficient charge of refrigerant, additional refrigerant should be added until the test cock shows the correct discharge of milk-like spray.

The oil level in the compressor should then be checked to determine if there has also been a loss of oil. As a rule, a loss of refrigerant due to a small leak does not necessarily mean that the oil has also been lost; however, it is recommended that the oil level be checked. This test is accomplished by allowing the compressor to run from 20 minutes to a half hour to make sure that the oil is properly distributed throughout the system. After this period, the compressor is then stopped and both service valves closed. The oil filler plug is then removed from the crankcase and a pencil or clean wire is inserted so that it touches the bottom of the crankcase. When removed, it should show an oil level of approximately 1½" in the crankcase. If the oil level is below 1½", additional oil should be added to give a normal level. *Only special compressor oil can be used.* Care should be taken in inserting the test rod as an undue agitation causes the oil in the crankcase, which is saturated with refrigerant, to foam.

In the event it has been necessary to add refrigerant to the system, a careful check should be made of all tubing connections, joints, etc. in the system so that the leak can be located and fixed. We cannot too strongly recommend the checking of each installation as it is put into service, as a loss of refrigerant during the winter months results in a condition whereby there is an insufficient amount of refrigerant to properly absorb and return the oil back to the compressor crankcase.

ECONO-DRIVE SOLENOID INSTALLATION

A case recently came to our attention where an owner's Econo-Drive ceased to operate. The car was brought to the dealer's service man who quite readily diagnosed the trouble as being in the solenoid unit.

A new solenoid was installed. A road test proved that the original trouble had been corrected but now the car would not go into Econo-Drive when releasing the accelerator above the governor cut in speed and the indicator light burned all the time.

The mechanic then completely dismantled the Econo-Drive unit, but everything seemed to be in order, so the unit was reassembled and replaced.

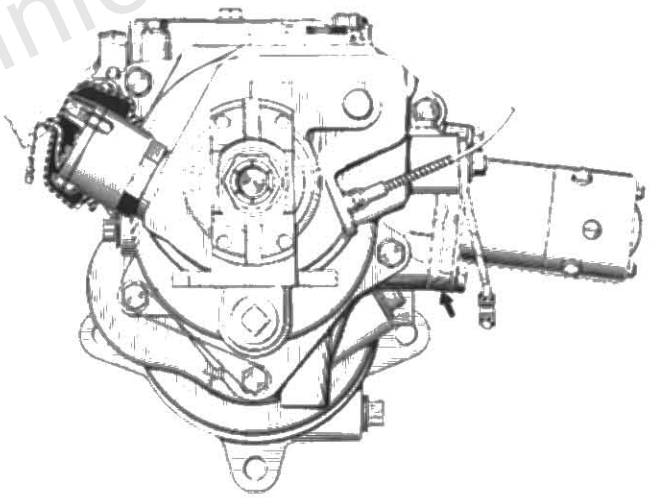

The trouble proved to be the position in which the metal spacer between the solenoid and the Econo-Drive housing was installed. The center hole in this spacer through which the solenoid shaft passes is offset. Although the two attaching cap screw holes will line up in either position, there is only one way to install the spacer so that the shaft will clear the hole in the spacer.

In this case the spacer was installed upside down with the result that the spacer pressed so hard against the solenoid shaft that it was impossible for the pawl to slide out of the balk ring and permit the Econo-Drive to engage.

PRINTED IN U. S. A.