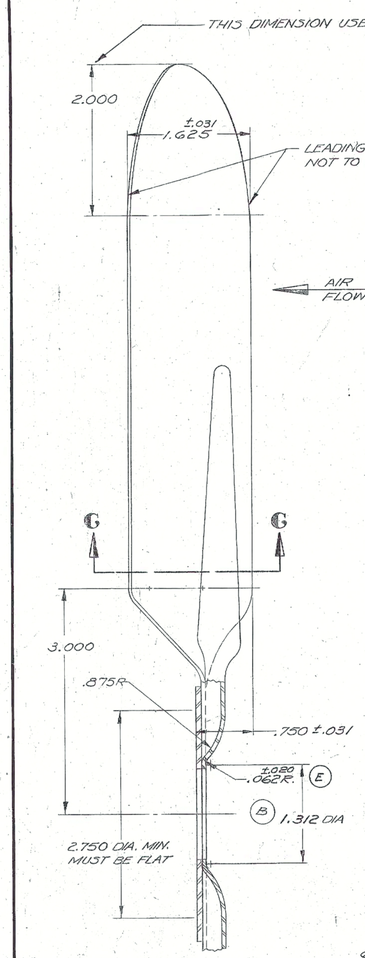
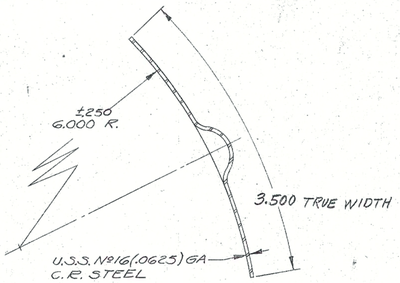
"PHOENIX" No. 166 K & E CO., N.Y. U.S.A. 887 12-48

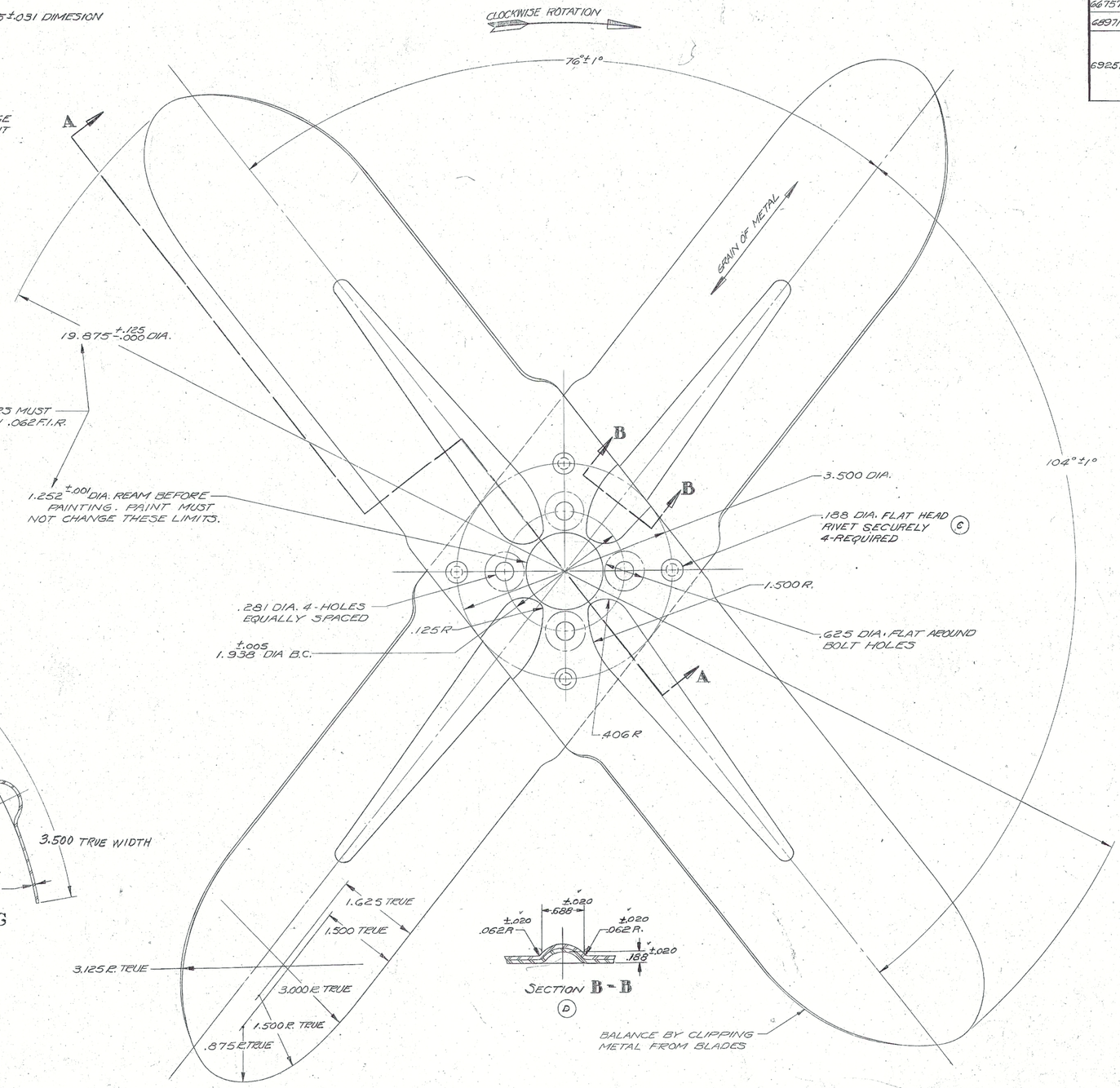
ALT. NO.	LET.	ALTERATION NOT P.S.	DATE	CKR.
66757	A	NEW PART ADDED	FEB 9 1951	
68971	B	.062 R. MIN. WAS .125 R.	APR 30 1953	
69251	C	"FLAT HEAD" ADDED TO RIVET NOTE	June 25, 1953	
	D	SECTION B-B REVISED		
	E	.062 +.020 R. WAS .062 R. MIN.		
	F	NOTE No 1 REVISED 112032 WAS PTX-35-32		



SECTION A-A



SECTION G-G



SECTION B-B
D

4- BALANCE STATICALLY WITHIN .25 OZ. IN. ABOUT CENTER HOLE.

3- STEEL STAMPING - REMOVE SCALE - BLACK BAKED ASPHALT BASE PAINT

2- SAMPLE TO RECEIVE ENGINEER'S APPROVAL BEFORE PURCHASING

1- PURCHASE FINISHED - HAYES INDUSTRIES INC. PART N° 112032 OR EQUIVALENT

ALL HOLES AND SHARP CORNERS TO BE BURRED .005 TO .015 UNLESS OTHERWISE SPECIFIED.

ALLOWABLE VARIATION ON DIMENSIONS LOCATING FINISHED SURFACES IS PLUS OR MINUS .010 UNLESS OTHERWISE SPECIFIED.

ALLOWABLE VARIATION ON CASTING DIMENSIONS IS PLUS OR MINUS 1-32 AND ON FORGING DIMENSIONS PLUS 1-16 MINUS .000 UNLESS OTHERWISE SPECIFIED.

REMOVE SCALE FROM FORGINGS.
REMOVE SAND AND FINS FROM CASTINGS.
FORGING DRAFT ANGLES 7° UNLESS OTHERWISE SPECIFIED.
DOT AND DASH LINES INDICATE ROUGH STOCK.

BY	DTR.	TCR.	CKR.	MET.	CF. DN.	ENG.
Harrison	—	Clement	E.H. Jackson	Swanson	Hayes	
Jan 31, 1951	—	FEB 9 1951	Feb 9 1951	Feb. 12 1951	Feb 12 1951	

Packard MOTOR CAR COMPANY DETROIT, MICHIGAN

MATERIAL	SIZE	SHAPE	FORM	NAME	PIECE NO.
SEE NOTES	—	—	—	MOTOR FAN 327 ENGINES.	433779